GENERAL CATALOGUE

NUOVA FIMA

MEASURING INSTRUMENTS - STRUMENTI PER MISURARE

BOURDON TUBE PRESSURE GAUGE

NUOVA FIMA

bourdon tube pressure gauges
standard execution
DS 1.5", 2" (40-50mm)

PED 2014/68/EU

They can be used with gaseous or liquid media which do not corrode copper alloy and which do not have high viscosity or do not cristalize.

1.01.1 - Standard Model, DS *1.5"* (40mm)

Design: EN 837-1.
Ranges: *from 0...30 to 0...600 psi* (from 0...2,5 to 0...40 bar or equivalent units)
Accuracy class: 1,6 as per EN 837-1.
Ambient temperature: *-13...+122°F* (-25°C...+50°C).
Process fluid temperature : *+149°F* (+ 65 °C max).
Thermal drift: max ±0,4 %/10 K of range (starting from *68°F* - 20°C).
Working pressure:
75% of FSV for static pressure;
66% of FSV for pulsating pressure.
Overpressure (max 15 min):
25% of FSV for ranges ≤ *1500 psi* (100 bar);
15% of FSV for ranges over *1500 psi* (100 bar).
Protection degree: IP 40 as per IEC 529.
Socket material: copper alloy.
Bourdon tube: copper alloy.
Welding: copper alloy.
Case: stainless steel
Window: plastic.
Movement: copper alloy.
Dial: aluminium, white with black markings
Pointer: non adjustable, aluminium, black.

1.01.1 - Standard Model, DS *2"* (50mm)

Ranges: *from 0...30 to 0...6000 psi* ; (from 0...2,5 to 0...400 bar or other equivalent units).
Ambient temperature: *-13...+149°F* (-25°C...+65°C).
Other features: as Standard Model, DS *1.5"* (40mm).

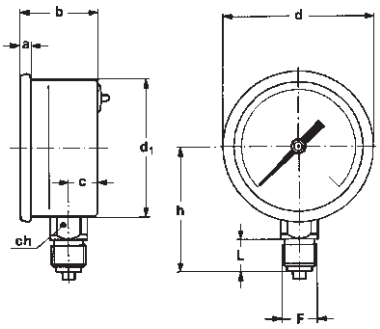

A - LOWER CONNECTION

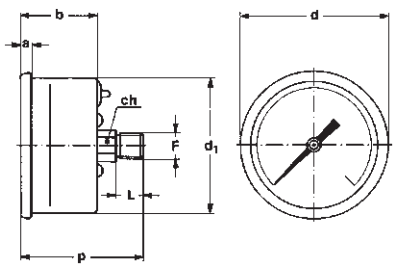

D - BACK CONNECTION

Mounting	DS	F	a	b	c	d	d_1	h	p	L	ch	Weight
Back	**A** *1.5"* (40)	**11M** - G 1/8 A **13M** - 1/8-27 NPT		*1.04"* (26,5)	*0.43"* (11)	*1.61"* (41)			*1.77"* (45)	*0.39"* (10)	*0.47"* (12)	*0.15 lbs* (0,07 kg)
Lower	**B** *2"* (50)	**21M** - G 1/4 A	*0.15"* (4)	*1.14"* (29)	*0.43"* (11)	*2.20"* (56)	*2.00"* (51)			*0.51"* (13)	*0.55"* (14)	*0.22 lbs* (0,1 kg)
Lower	**B** *2"* (50)	**23M** - 1/4-18 NPT	*0.15"* (4)	*1.14"* (29)		*2.20"* (56)	*2.00"* (51)	*1.88"* (47,9)		*0.59"* (15)	*0.55"* (14)	*0.22 lbs* (0,1 kg)
Back	**B** *2"* (50)	**11M** - G 1/8 A **13M** - 1/8-27 NPT	*0.15"* (4)	*1.14"* (29)		*2.20"* (56)	*2.00"* (51)	*1.88"* (47,9)	*1.81"* (46)	*0.39"* (10)	*0.47"* (12)	*0.18 lbs* (0,085 kg)

dimensions : *inches* (mm)

"HOW TO ORDER" SEQUENCE

Section / Model /Case / Mounting / Diameter / Range / Process connection / Options

1	**01**	**1**	**A**	**A**	**11M**
			D	**B**	**13M**
					21M
					23M

IN ORDER TO IMPROVE THEIR PRODUCTION, MESSRS. NUOVA FIMA RESERVE THE RIGHT TO THEMSELVES TO MAKE ALL THE MODIFICATIONS THAT THEY DEEM INDISPENSABLE AT ANY TIME. UPDATED DATA SHEETS ARE AVAILABLE ON SITE: www.nuovafima.com

Copyright © Nuova Fima srl. All rights reserved. Any part of this publication should not be reproduced without a written Nuova Fima's srl approval

NUOVA FIMA USA Inc.
www.nuovafima.com - e-mail: infousa@nuovafima.com
4123 Hollister, Suite G - TX 77080 Houston
TEL. +1 713.690.9800 - FAX +1 713.690.9803

NUOVA FIMA srl
www.nuovafima.com - e-mail: info@nuovafima.com
P.O. BOX 58 - VIA C. BATTISTI 59 - 28045 INVORIO (NO) ITALY
TEL. +39 0322 253200 - FAX +39 0322 253232

MS1

bourdon tube pressure gauges

DS 6" (150mm)

PED 2014/68/EU

They can be used with gaseous or liquid media which do not corrode copper alloy and which do not have high viscosity or do not cristalize.

1.01.1 - Standard Model

Design: EN837-1.
Safety designation: S1 as per EN 837-2.
Ranges: *from 0...15 to 0...15000 psi* (from 0...1 to 0...1000 bar or equivalent units).
Accuracy class: 1,6 as per EN 837-1.
Ambient temperature: *-13...+149°F* (-25...+65 °C).
Process fluid temperature:
13...+149°F (-25...+65 °C) for ranges ≤ *600 psi* (40 bar);
-13...+ 248°F (-25...+120 °C) for ranges ≥ *1000 psi* (60 bar).
Thermal drift: max ±0,4 %/10 K of range (starting from *+68°F* - 20°C).
Working pressure:
75% of FSV for static pressure;
66% of FSVfor pulsating pressure.
Overpressure (max 15 min):
25% of FSV for ranges ≤ 1500 *psi* (100 bar);
15% of FSV for ranges more than *1500 psi* (100 bar).
Protection degree: IP 44 as per IEC 529.
Socket material: copper alloy, internal restrictor *Ø 0.03"* (0,8 mm).

Bourdon tube: copper alloy for ranges ≤ *600 psi* (40 bar); AISI 316L st.st. for ranges > *1000 psi* (60 bar).
Case: stainless steel.
Ring: stainless steel, bayonet lock
Window: tempered glass.
Movement: copper alloy.
Dial:aluminium, white with black markings
Pointer: non adjustable, aluminium, black

RC6 - 03/14

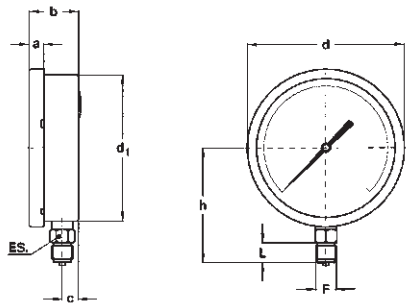

A - LOWER CONNECTION

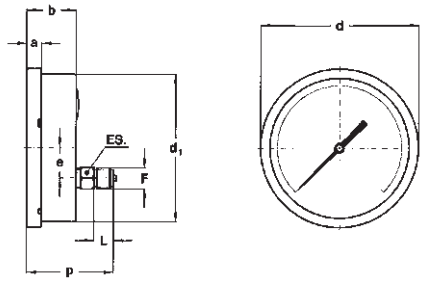

D - BACK CONNECTION

Mounting	F	a	b	c	d	d_1	e	h	p	L	ES	Weight
Lower	**41M** - G 1/2 A **43M** - 1/2-14 NPT	*0.59"* (15)	*1.98"* (50,5)	*0.16"* (16,5)	*6.33"* (161)	*5.88"* (149,6)		*4.60"* (117)		*0.78"* (20)	*0.86"* (22)	*2.44 lbs* (1,11 kg)
Back	**41M** - G 1/2 A **43M** - 1/2-14 NPT	*0.59"* (15)	*1.98"* (50,5)		*6.33"* (161)	*5.88"* (149,6)	*1.22"* (31)		*3.50"* (89)	*0.78"* (20)	*0.86"* (22)	*2.20 lbs* (1,0 kg)

dimensions : *inches* (mm)

OPTIONS

B -	"U"-clamp, for back connection pressure gauges
C -	Back flange, for lower connection pressure gauges
E -	Front flange, for back connection pressure gauges
K10 -	Accuracy class 1,0%
L21 -	Maximum pointer IP 44 on plexiglas window (1)
T32 -	Safety glass window

(1) Accuracy refers to the area free from the maximum pointer action.

"HOW TO ORDER" SEQUENCE

Section / Model /Case / Mounting / Diameter / Range / Process connection / Options

1	**01**	**1**	**A**	**G**	**41M**	**B, C, E**
			D		**43M**	**K10...T32**

IN ORDER TO IMPROVE THEIR PRODUCTION, MESSRS. NUOVA FIMA RESERVE THE RIGHT TO THEMSELVES TO MAKE ALL THE MODIFICATIONS THAT THEY DEEM INDISPENSABLE AT ANY TIME. UPDATED DATA-SHEETS ARE AVAILABLE ON SITE: www.nuovafima.com

Copyright © Nuova Fima srl. All rights reserved. Any part of this publication should not be reproduced without a written Nuova Fima's srl approval

NUOVA FIMA USA Inc.
www.nuovafima.com - e-mail: infousa@nuovafima.com
4123 Hollister, Suite G - TX 77080 Houston
TEL. +1 713.690.9800 - FAX +1 713.690.9803

NUOVA FIMA srl
www.nuovafima.com - e-mail: info@nuovafima.com
P.O. BOX 58 - VIA C. BATTISTI 59 - 28045 INVORIO (NO) ITALY
TEL. +39 0322 253200 - FAX +39 0322 253232

MS4

bourdon tube pressure gauges
anti-vibration version
DS 4" (100mm)

PED 2014/68/EU

Instruments designed for use on power units, pump, hydro-cleaning machines, presses, engine compressors, turbines, diesel engines, chemical, petrochemical and refrigerating plants and on machines and equipment where pulsating pressures or mechanical vibrations are apparent. They can be used with gaseous or liquid media which do not corrode copper alloy and which do not have high viscosity or do not cristalize.

1.04.2 - Fillable Model

Design: EN 837-1.
Safety designation: S1 as per EN 837-2.
Ranges: *from 0...15 to 0...15000 PSI* (from 0...1 to 0...1000 bar or other equivalent units).
Accuracy class: 1,6 as per EN 837-1.
Ambient temperature: *-13...+149°F* (-25...+65 °C).
Process fluid temperature: *+212°F* (max +100 °C).
Thermal drift: max ±0,4 %/10 °C of ranges (starting from *68°F*- 20°C).
Working pressure:
75% of FSV for static pressure;
66% of FSV for pulsating pressure.
Overpressure (max 15 min): 25% of FSV of ranges ≤ *1500 psi* (100 bar);
15% of FSV for ranges over *1500 psi* (100 bar).
Protection degree: IP 67 as per IEC 529.
Socket material: copper alloy, with internal restrictor ø 0.03" (0,8 mm)
Bourdon tube:
copper alloy for ranges ≤ *10000 psi* (600 bar);
AISI 316L st.st. for ranges *15000 psi* (1000 bar).
Case: stainless steel.
Ring: stainless steel, crimped.
Window: tempered glass.
Movement: copper and stainless steel.
Dial: aluminium, white with black markings
Pointer: not adjustable, aluminium,black

1.04.3 - Filled Model

Damping liquid: glycerine 98%, silicon oil.
Ambient temperature:
+32...+149 °F (0...+65 °C) with glycerine filling;
-40...+149 °F (-40...+65 °C) with silicon oil filling.
Process fluid temperature: max+*149°F* (+65°C) .
Other features: as Fillable Model.

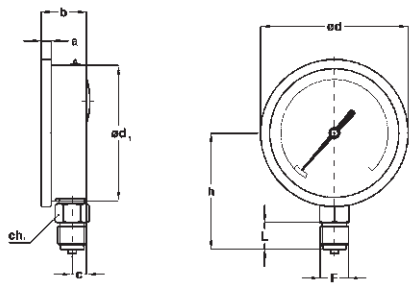

A - LOWER CONNECTION

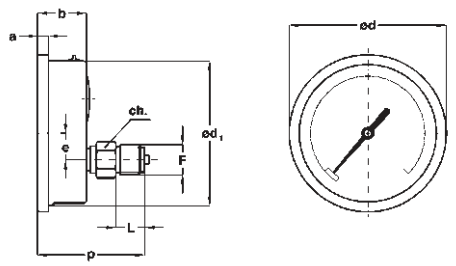

D - BACK CONNECTION

Mounting	F	a	b	c	d	d_1	e (3)	h	p	ch	L	Weight
Lower	**41M** - G 1/2 A **43M** - 1/2-14 NPT	*0.29"* (7,5)	*1.33"* (34)	*0.43"* (11)	*4.33"* (110)	*3.97"* (101)		*3.42"* (87)		*0.86"* (22)	*0.78"* (20)	*0.88 lbs (1)* (0,4 kg)
Back	**41M** - G 1/2 A **43M** - 1/2-14 NPT	*0.29"* (7,5)	*1.33"* (34)		*4.33"* (110)	*3.97"* (101)	*0.73"* (18,5)		*2.95"* (75)	*0.86"* (22)	*0.78"* (20)	*0.79 lbs (2)* (0,36 kg)

(1) Add *0.5 lbs* (0,23 kg) when filled - (2) Add *0.53 lbs* (0,24 kg) when filled

OPTIONS

Model		fillable	filled
B -	"U"-clamp, for back connection pressure gauges	◆	◆
C -	Back flange, for lower connection pressure gauges	◆	◆
E -	Front flange, for back connection pressure gauges	◆	◆
P01 -	Suitable for filling with silicone	◆	
S06 -	Restrictor plug ø *0.01"* (0,4 mm)	◆	◆
S10 -	Silicone filling		◆

"HOW TO ORDER" SEQUENCE

Section / Model /Case / Mounting / Diameter / Range / Process connection / Options

1	**04**	**2**	**A**	**E**	**41M**	**B, C, E**
		3	**D**		**43M**	**P01...S10**

IN ORDER TO IMPROVE THEIR PRODUCTION, MESSRS. NUOVA FIMA RESERVE THE RIGHT TO THEMSELVES TO MAKE ALL THE MODIFICATIONS THAT THEY DEEM INDISPENSABLE AT ANY TIME. UPDATED DATA-SHEET'S ARE AVAILABLE ON SITE: www.nuovafima.com

Copyright © Nuova Fima srl. All rights reserved. Any part of this publication should not be reproduced without a written Nuova Fima's srl approval

NUOVA FIMA USA Inc.
www.nuovafima.com - e-mail: infousa@nuovafima.com
4123 Hollister, Suite G - TX 77080 Houston
TEL. +1 713.690.9800 - FAX +1 713.690.9803

NUOVA FIMA srl
www.nuovafima.com - e-mail: info@nuovafima.com
P.O. BOX 58 - VIA C. BATTISTI 59 - 28045 INVORIO (NO) ITALY
TEL. +39 0322 253200 - FAX +39 0322 253232

MGS10

bourdon tube pressure gauges
anti-vibration version
DS 2" (50mm)

PED 2014/68/EU

Instruments designed for use on power units, pumps, hydro-cleaning machines, presses, engine compressors, turbines, diesel engines, chemical, petrochemical and refrigerating plants and on machines and equipment where pulsating pressures or mechanical vibrations are apparent. They can be used with gaseous or liquid media which do not corrode copper alloy and which do not have high viscosity or do not cristalize.

1.10.2 - Fillable Model

Design: EN 837-1.
Ranges: *from 0...30 to 0...6000 psi* (from 0...2,5 to 0...400 bar)
Accuracy class: 1,6 as per EN 837-1.
Ambient temperature: *-13...+149°F* (-25...+65 °C).
Process fluid temperature: *+248°F* (max +120 °C).
Thermal drift: max ±0,4 %/10 °C of ranges (starting from *+68°F* - 20°C).
Working overpressure:
75% of FSV for static pressure;
66% of FSV for pulsating pressure;
Overpressure (max 15 min):
25% of FSV of ranges ≤ *1450 psi* (100 bar);
15% of FSV for ranges over *1450 psi* (100 bar).
Protection degree: IP 65 as per IEC 529.
Socket material: copper alloy.
Bourdon tube: copper alloy.
Case: stainless steel.
Window: plastic.
Movement: copper alloy.
Dial: aluminium,white with black markings.
Pointer: not adjustable, aluminium,black

1.10.3 - Filled Model

Damping liquid: glycerine 98%.
Ambient temperature: *+32...+149°F* (0...+65 °C).
Process fluid temperature: *+149°F* (max +65 °C).
Other features: as fillable model.

RG6 - 03/14

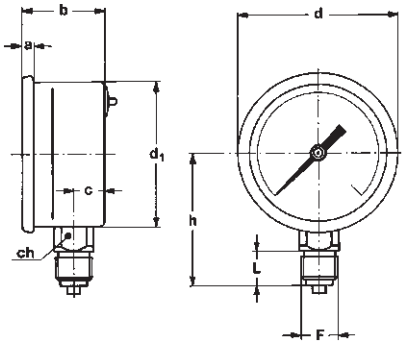

A - LOWER CONNECTION

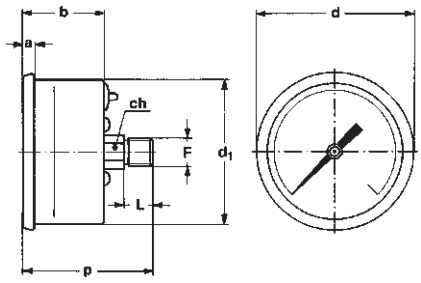

D - BACK CONNECTION

Mounting	F	a	b	c	d	d_1	h	p	L	ch	Weight (1)
Lower	**21M** - G 1/4 A **23M** - 1/4-18 NPT	*0.15"* (4)	*1.14"* (29)	*0.43"* (11)	*2.20"* (56)	*2.00"* (51)	*1.87" - 1.94"* (47,5 - 49,5)		*0.51" - 0,59"* (13 - 15)	*0.55"* (14)	*0.22 lbs* (0,1 kg)
Back	**11M** - G 1/8 A **13M** - 1/8-27 NPT	*0.15"* (4)	*1.14"* (29)		*2.20"* (56)	*2.00"* (51)		*1.81"* (46)	*0.39"* (10)	*0.47"* (12)	*0.18 lbs* (0,085 kg)

dimensions : *inches* (mm)

(1) add *0.09 lbs* (0,045 kg) when filled

OPTIONS

Model	fillable	filled
B - Clamp and ring for back connection pressure gauges	◆	◆

"HOW TO ORDER" SEQUENCE

Section / Model /Case / Mounting / Diameter / Range / Process connection / Options

1	**10**	**2**	**A**	**B**	**11M**	**B**
		3	**D**		**13M**	
					21M	
					23M	

IN ORDER TO IMPROVE THEIR PRODUCTION, MESSRS. NUOVA FIMA RESERVE THE RIGHT TO THEMSELVES TO MAKE ALL THE MODIFICATIONS THAT THEY DEEM INDISPENSABLE AT ANY TIME. UPDATED DATA-SHEETS ARE AVAILABLE ON SITE: www.nuovafima.com

Copyright © Nuova Fima srl. All rights reserved. Any part of this publication should not be reproduced without a written Nuova Fima's srl approval

NUOVA FIMA USA Inc.
www.nuovafima.com - e-mail: infousa@nuovafima.com
4123 Hollister, Suite G - TX 77080 Houston
TEL. +1 713.690.9800 - FAX +1 713.690.9803

NUOVA FIMA srl
www.nuovafima.com - e-mail: info@nuovafima.com
P.O. BOX 58 - VIA C. BATTISTI 59 - 28045 INVORIO (NO) ITALY
TEL. +39 0322 253200 - FAX +39 0322 253232

MGS10

bourdon tube pressure gauges
anti-vibration version
DS 2.5" (63mm)

PED 2014/68/EU

These instruments are built in conformity with the construction and safety S2 specifications of EN 837-1.
Instruments designed for use on power units, pump, hydro-cleaning machines, presses, engine compressors, turbines, diesel engines, refrigerating plants and on machines and equipment where pulsating pressures or mechanical vibrations are apparent. They can be used with gaseous or liquid media which do not corrode copper alloy and which do not have high viscosity or do not cristalize.

1.10.2 - Fillable Model

Design: EN837-1.
Safety designation: S2 as per EN 837-1.
Ranges: from 0...15 to 0...10000 psi (from 0...1 to 0...600 bar or other equivalent units).
Accuracy class: 1,6 as per EN 837-1.
Ambient temperature: -13...+149°F (-25...+65 °C).
Process fluid temperature: +212°F (max +100 °C).
Thermal drift: max ±0,4 %/10 °C of ranges (starting from + 68 °F - 20 °C).
Working pressure:
75% of FSV for static pressure;
66% of FSV for pulsating pressure.
Over pressure limit (15 min max):
25% of FSV for pressure ranges ≤ 1500 psi (100 bar);
15% of FSV for pressure ranges over 1500 psi (100 bar).
Protection degree: IP 67 as per EN 60529/IEC 529.
Socket material: copper alloy.
Bourdon tube: copper alloy.
Case: stainles steel.
Ring: stainless steel, polished, crimped
Window: polycarbonate.
Movement: copper and stainless steel.
Dial: plastic, white with black markings
Pointer: not adjustable, aluminium, black

1.10.3 - Filled Model

Damping liquid: glycerine 98% or silicon oil.
Ambient temperature:
+32...+149 °F (0...+65 °C) with glycerine filling;
-40...+149 °F (-40...+65 °C) with silicon oil filling.
Process fluid temperature: max +149°F (+65 °C).
Other features: as fillable model.

ISO 9001 : 2008
Cert. nr. 0433/6

bourdon tube pressure gauge

anti-vibration version DS 2.5" (63mm)

MGS10

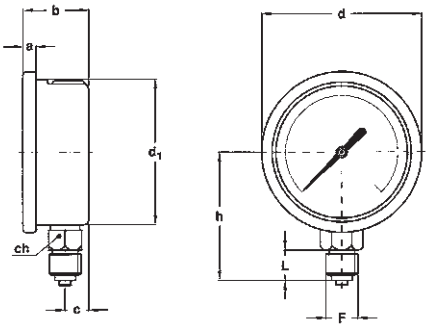

A - LOWER CONNECTION

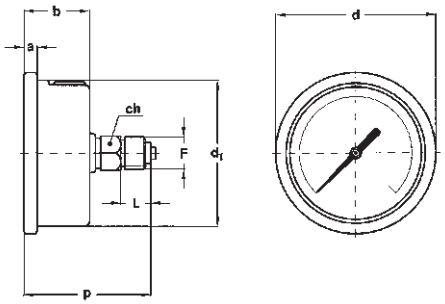

D - BACK CONNECTION

Mounting	F	a	b	c	d	d_1	h	p	L	ch	Weight (1)
Lower	**21M** - G 1/4 A **23M** - 1/4-18 NPT	*0.22"* (5,6)	*1.10"* (28)	*0.39"* (10)	*2.67"* (68)	*2.46"* (62,6)	*2.17" - 2.13"* (55,3 - *54,3)*		*0.51"* (13)	*0.51" x 0.35"* (14 x 9)	*0.28 lbs* (0,13 kg)
Back	**21M** - G 1/4 A **23M** - 1/4-18 NPT	*0.22"* (5,6)	*1.10"* (28)		*2.67"* (68)	*2.46"* (62,6)		*1.81" - 2.11"* (54,8 - *53,8)*	*0.39"* (13)	*0.51" x 0.35"* (14 x 9)	*0.30 lbs* (0,14 kg)

dimensions : *inches* (mm)

(1) add *0.15 lbs* (0,07 kg) when filled

OPTIONS

Model		fillable	filled
B -	"U"-clamp, for back connection pressure gauges	◆	◆
C -	Back flange, for lower connection pressure gauges	◆	◆
E -	Front flange, for back connection pressure gauges	◆	◆
Q03 -	Dial: aluminium (min. 100 pz)	◆	◆
S06 -	Restrictor plug ø *0.015* " (0,4 mm).	◆	◆
P01 -	Suitable for filling with silicone	◆	
S10 -	Silicone filling		◆
T37 -	Tempered glass window	◆	◆

(1) Safety designation: S1 as per EN 837-1.

"HOW TO ORDER" SEQUENCE

Section / Model /Case / Mounting / Diameter / Range / Process connection / Options

1	**10**	**2**	**A**	**C**	**21M**	**B, C, E**
		3	**D**		**23M**	**Q03...T37**

Copyright © Nuova Fima srl. All rights reserved. Any part of this publication should not be reproduced without a written Nuova Fima's srl approval

NUOVA FIMA USA Inc.
www.nuovafima.com - e-mail: infousa@nuovafima.com
4123 Hollister, Suite G - TX 77080 Houston
TEL. +1 713.690.9800 - FAX +1 713.690.9803

NUOVA FIMA srl
www.nuovafima.com - e-mail: info@nuovafima.com
P.O. BOX 58 - VIA C. BATTISTI 59 - 28045 INVORIO (NO) ITALY
TEL. +39 0322 253200 - FAX +39 0322 253232

RC6 - 03/14

IN ORDER TO IMPROVE THEIR PRODUCTION, MESSRS. NUOVA FIMA RESERVE THE RIGHT TO THEMSELVES TO MAKE ALL THE MODIFICATIONS THAT THEY DEEM INDISPENSABLE AT ANY TIME. UPDATED DATA-SHEETS ARE AVAILABLE ON SITE: www.nuovafima.com

MGS10

bourdon tube pressure gauges
anti-vibration heavy duty version
DS 4" (100mm)

PED 2014/68/EU

Instruments designed for use on power units, pumps, hydro-cleaning machines, presses, engine compressors, turbines, diesel engines, chemical, petrochemical and refrigerating plants and on machines and equipment where pulsating pressures or mechanical vibrations are apparent. They can be used with gaseous or liquid media which do not corrode copper alloy and which do not have high viscosity or do not cristalize.

1.10.1 - Standard Model

Design: EN 837-1.
Safety designation: S1 as per EN 837-2.
Ranges: *from 0...15 to 0...15000 PSI* (from 0...1 to 0...1000 bar or other equivalent units).
Accuracy class: 1,0 as per EN 837-1.
Ambient temperature: *-40...+149 °F* (-40...+65 °C)
Process fluid temperature:
-13...+212 °F (-25...+100 °C) for ranges ≤ *600 psi* (40 bar);
-13...+248°F (-25...+120 °C) per campi ≥ *600 psi* (40 bar).
Thermal drift: ±0,4 %/10 °C of range (starting from *68°F* - 20°C).
Working pressure:
100% of FSV for static pressure;
90% of FSV for pulsating pressure.
Overpressure limit: 30% of FSV (max 12 h).
Protection degree: IP 55 as per IEC 529.
Socket material:
copper alloy with internal restrictor Ø *0.03"* (0,8 mm).
Bourdon tube:
copper alloy for ranges ≤ *600 psi* (40 bar);
AISI 316L st.st.for ranges > *600 psi* (40 bar).
Case: stainless steel.
Ring: stainless steel, bayonet lock
Window: tempered glass
Movement: copper.
Dial: aluminium, white with black markings
Pointer: not adjustable, aluminium ,black

1.10.2 - Fillable Model

Protection degree: IP 67 as per IEC 529.
Other features: as Standard Model.

1.10.3 - Filled Model

Damping liquid: glycerine 98% or silicon oil.
Ambient temperature:
+32...+149 °F (0...+65 °C) with glycerine filling;
-40...+149 °F (-40...+65 °C) with silicon oil filling.
Process fluid temperature: *max +149°F* (+65 °C).
Protection degree: IP 67 as per IEC 529.
Other features: as Standard Model

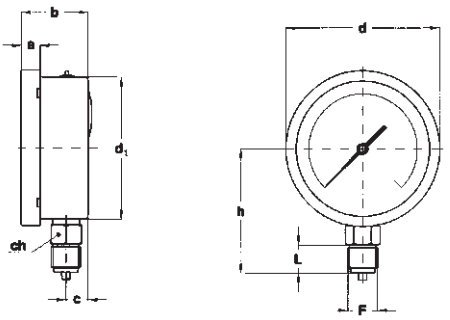

A - LOWER CONNECTION

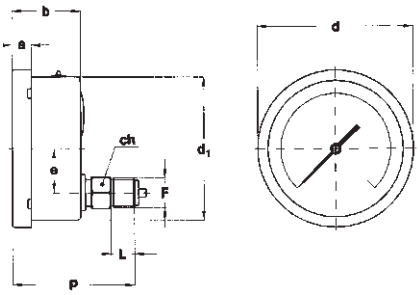

D - BACK CONNECTION

Mounting	F	a	b	c	d	d_1	e	h	p	ch	L	Weight (1)
Lower	41M - G 1/2 A 43M - 1/2-14 NPT	*0.51"* (13)	*1.91"* (48,6)	*0.63"* (16,1)	*4.35"* (110,6)	*3.97"* (101)		*3.38"* (86)		*0.86"* (22)	*0.78"* (20)	*1.14 lbs* (0,52 kg)
Back	41M - G 1/2 A 43M - 1/2-14 NPT	*0.51"* (13)	*1.91"* (48,6)		*4.35"* (110,6)	*3.97"* (101)	*1.22"* (31)		*3.41"* (86,8)	*0.86"* (22)	*0.78"* (20)	*1.25 lbs* (0,57 kg)

dimensions : *inches* (mm)

(1) add *0.72 lbs* (0,33 kg) when filled

OPTIONS

Model		standard	fillable	filled
B -	"U"-clamp, for back connection pressure gauges	◆	◆	◆
C -	Back flange, for lower connection pressure gauges	◆	◆	◆
E -	Front flange, for back connection pressure gauges	◆	◆	◆
L22 -	Maximum pointer IP 67 on polycarbonate window (1)		◆	◆
P01 -	Suitable for filling with silicone		◆	
S10 -	Silicone filling			◆
T32 -	Safety glass window	◆	◆	◆

(1) Accuracy refers to the area free from the maximum pointer action.

"HOW TO ORDER" SEQUENCE

Section / Model /Case / Mounting / Diameter / Range / Process connection / Options

1	10	1	A	E	41M	B, C, E
		2	D		43M	L22...T32
		3				

IN ORDER TO IMPROVE THEIR PRODUCTION, MESSRS. NUOVA FIMA RESERVE THE RIGHT TO THEMSELVES TO MAKE ALL THE MODIFICATIONS THAT THEY DEEM INDISPENSABLE AT ANY TIME. UPDATED DATA-SHEETS ARE AVAILABLE ON SITE: www.nuovafima.com

Copyright © Nuova Fima srl. All rights reserved. Any part of this publication should not be reproduced without a written Nuova Fima's srl approval

NUOVA FIMA USA Inc.
www.nuovafima.com - e-mail: infousa@nuovafima.com
4123 Hollister, Suite G - TX 77080 Houston
TEL. +1 713.690.9800 - FAX +1 713.690.9803

NUOVA FIMA srl
www.nuovafima.com - e-mail: info@nuovafima.com
P.O. BOX 58 - VIA C. BATTISTI 59 - 28045 INVORIO (NO) ITALY
TEL. +39 0322 253200 - FAX +39 0322 253232

MGS30

bourdon tube "solid-front" pressure gauges
turret case
DS 4.5" (125 mm)

These instruments are built in conformity with the construction and safety specifications of **ASME B40.1**.
In case of leaks or break of the elastic element the operator is protected by a stainless steel safety cell solid front and by the blow-out back. They are usually used in the chemical, petrochemical industries and in conventional power plants. The TIG welding between the safety cell and the process socket strengthens the instrument and assures a better tight in case of dampening fluid The advantages of filling the case of the instrument with a dampening fluid are: reduced pointer fluctuation, reduced wear of rotating parts of the movement when pulsant vibrations and pulsations occur. Moreover condensation and corrosive atmospheres which could damage the internal parts.

1.30.2 - Fillable Model - Lower connection only

Design: ASME B40.1
Ranges: *from 0...15 to 0...30000 psi*; (from 0...0,6 to 0...1600 bar or other equivalent units).
Accuracy: 2A grade as per ASME B40.1 (±0,5% of FSV).
Ambient temperature: *-22...+149°F* (-30...+65°C).
Process fluid temperature: *-22...302°F* (-30...+150°C max).
Working pressure:
100% del FSV for static pressure;
90% del FSV for pulsating pressure.
Overpresssure: 30% of FSV (max 12 h).
Protection degree: IP 67 as per IEC 529.
Socket material: AISI 316L st.st.
Bourdon tube: AISI 316L st.st. seamless tube.
Case and blow out disk: strengthened polyammides with fiber glass , UV rays stabilized.
Ring: strengthened polypropylene, fiber glass.
Safety cell: stainless steel.
Window: tempered glass.
Movement: stainless steel with internal limit stops for minimum and maximum pressure.
Dial: aluminium, white with black markings.
Pointer: adjustable, aluminium, black.

1.30.3 - Filled Model - Lower connection only

Ranges: *from 0...15 to 0...30000 psi;* (from 0...1 to 0...1600 bar or other equivalent units).
Accuracy: 1A grade as per ASME B40.1 (±1,0% of FSV).
Filling liquid: glycerine 98%, and silicon oil or Fluorinated fluid on request.
Ambient temperature:
+32...+149°F (0...+65 °C) with glycerine filling;
-22...+149°F (-30...+65 °C) with silicon oil filling;
-22...+149°F (-30...+65 °C) with fluorinated fluid filling.
Process fluid temperature: *+149°F* (+65 °C).
Compensating device: gum.
Other features: as Fillable Model.

1.30.1 - Standard Model - Back connection only

Protection degree: IP 55 as per IEC 529.
Case: phenolic resin.
Ring and blow out disk: strengthened polypropylene, fiber glass.
Safety cell: not available.
Separating wall: phenolic resin.
Other features: as Fillable Model.

OXYGEN INSTRUMENTS
Glycerine and silicon oil should not be used with highly oxydizing agents as oxygen, chlorine, nitric acid or hydrogrn peroxide because of danger of spontaneous chemical reaction, inflammability or explosion. The use of fluorinates fluid is recommended in these cases.

RC8 - 03/14

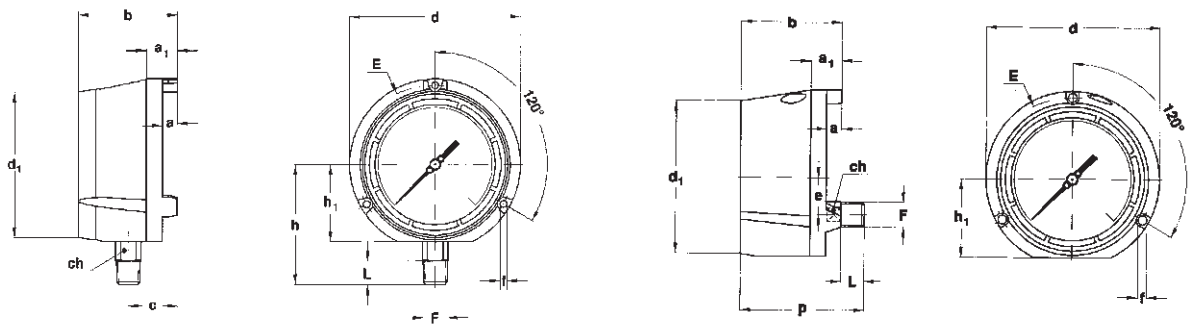

A - LOWER CONNECTION

D - BACK CONNECTION

Mounting	F	a	a_1	b	c	d	d_1	e	E	f	h	h_1	ch	p	Weight (1)	
Lower	**41M** G 1/2 A	*0.51"* (13)	*1.06"* (27)	*3.38"* (86)	*1.65"* (42)	*5.82"* (148)	*4.96"* (126)		*5.39"* (137)	*0.25"* (6,5)	*4.07"* (103,5)	*2.61"* (66,5)	*0.86"* (22)		*0.78"* (20)	*1.78 lbs* (0,81 kg)
Back	**43M** 1/2-14 NPT	*0.51"* (13)	*1.06"* (27)	*3.38"* (86)		*5.82"* (148)	*5.07"* (129)	*1.22"* (31)		*0.23"* (6)		*2.61"* (66,5)	*0.66"* (17)	*4.17"* (106)	*0.78"* (20)	*1.78 lbs* (0,81 kg)

dimensions : *inches* (mm)

(1) add 1.10 Ibs (0,5 kg) when filled.

OPTIONS

Model	standard	fillable	filled
F11 - Panel mounting kit	◆	◆	◆
F30 - Fluorinated fluid filling			◆
P01 - Suitable for silicone filling		◆	
P02 - Oxygen service (3)	◆	◆ (1)	◆ (2)
FDP - Blow out disk with compensating device		◆	
F30 - Over pressure limit: 50% of FSV for pressure ranges < *6000 psi* (400 bar)	◆	◆	◆
S10 - Silicone filling			◆
T01 - Tropicalization	◆	◆	◆
T32 - Safety glass window	◆	◆	◆

(1) to be ordered with instruments suitable for fluorinated fluid filling
(2) to be ordered with fluorinated fluid filled instruments
(3) For pressure ranges up to *15000 psi* (1000 bar)

"HOW TO ORDER" SEQUENCE

Section / Model /Case / Mounting / Diameter / Range / Process connection / Options

1	**30**	**1**	**A**	**F**	**41M**	**K03...T32**
		2	**D**		**43M**	
		3				

IN ORDER TO IMPROVE THEIR PRODUCTION, MESSRS. NUOVA FIMA RESERVE THE RIGHT TO THEMSELVES TO MAKE ALL THE MODIFICATIONS THAT THEY DEEM INDISPENSABLE AT ANY TIME. UPDATED DATA-SHEETS ARE AVAILABLE ON SITE: www.nuovafima.com

Copyright © Nuova Fima srl. All rights reserved. Any part of this publication should not be reproduced without a written Nuova Fima's srl approval

NUOVA FIMA USA Inc.
www.nuovafima.com - e-mail: infousa@nuovafima.com
4123 Hollister, Suite G - TX 77080 Houston
TEL. +1 713.690.9800 - FAX +1 713.690.9803

NUOVA FIMA srl
www.nuovafima.com - e-mail: info@nuovafima.com
P.O. BOX 58 - VIA C. BATTISTI 59 - 28045 INVORIO (NO) ITALY
TEL. +39 0322 253200 - FAX +39 0322 253232

MGS30 EXTRA

pressure gauges "solid-front" turret case DS 4.5" (125mm)

These instruments are built in accordance with safety specifications ASME B40.1, UNI-EN 837-2.
The safety construction consists of a stainless steel "solid-front" safety cell placed behind the scale, which welding to socket gives to instrument an exceptional strength. Whenever, due to leaks, an internal pressure is created or the elastic element is broken the safety cell protects the front and sides, meanwhile the blow out back is released from the case. They are designed for use in chemical, petrochemical, conventional power plants. The dampened movement make them particularly suitable in presence of high vibrations and pulsating pressure.

1.30.X.A - Standard Model - Lower Connection

Design: ASME B40.1
Ranges: *from 0...30 to 0...15000 psi*; (from 0...2,5 to 0...1000 bar or other equivalent units).
Accuracy: Grade 2A as per ASME B40.1 (±0,5% of span).
Ambient temperature: *-13...+149°F* (-25...+65°C).
Process fluid temperature: *-22...302°F* (-30...+150°C max).
Working pressure: max 75% of FSV.
Overpressure: (temporary): 30% of FSV.
Protection degree: IP 65 as per EN 60529/IEC 529.
Socket material: AISI 316 L.
Elastic element: AISI 316L seamless tube.
Case and blow out disk: polyammide, fiberglass reinforced, UV ray stabilized.
Ring: polypropylene, fiberglass reinforced.
Safety cell: AISI 304 st.st.
Window: tempered glass.
Movement: stainless steel, dampened.
Dial: aluminium, white with black markings.
Pointer: aluminium, micrometric adjustable.

1.30.X.D - Standard Model - Back Connection

Protection degree: IP 65 as per EN 60529/IEC 529.
Case: phenolic resin.
Ring and blow out disk: polypropylene, fiberglass reinforced.
Separating wall: AISI 304 st.st.
Safety cell: not available.

Other features: as lower connection.

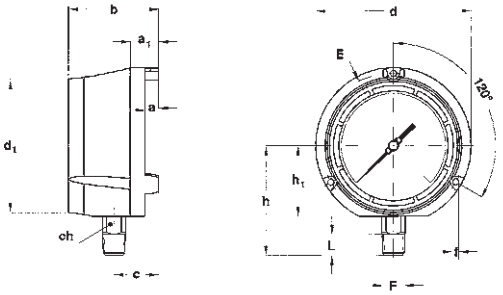

A - LOWER CONNECTION

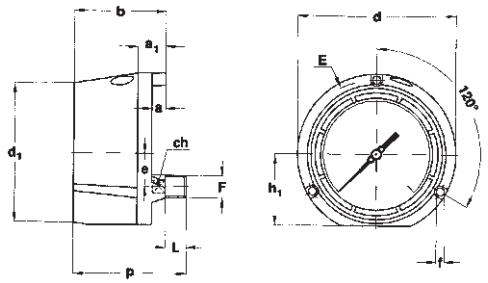

D - BACK CONNECTION

Mounting	F	a	a_1	b	c	d	d_1	e	E	f	h	h_1	ch	p	L	Weight (1)
Lower	**23M**-1/4-18 NPT **43M**-1/2-14 NPT	*0.51"* (13)	*1.06"* (27)	*3.38"* (86)	*1.65"* (42)	*5.82"* (148)	*4.96"* (126)		*5.39"* (137)	*0.25"* (6,5)	*4.07"* (103,5)	*2.61"* (66,5)	*0.86"* (22)		*0.78"* (20)	*1.78 lbs* (0,81 kg)
Back	**23M**-1/4-18 NPT **43M**-1/2-14 NPT	*0.51"* (13)	*1.06"* (27)	*3.38"* (86)		*5.82"* (148)	*5.07"* (129)	*1.22"* (31)		*0.23"* (6)		*2.61"* (66,5)	*0.66"* (17)	*4.17"* (106)	*0.78"* (20)	*2.20 lbs* (1,0 kg)

dimensions : *inches* (mm)

OPTIONS

F11 -	Panel mounting Kit
T01 -	Tropicalization
T25 -	AISI 316 st.st. label
T32 -	Safety glass window

"HOW TO ORDER" SEQUENCE

Section / Model / Case / Mounting / Diameter / Range / Process connection / Options

1	30	X	A	F		23M	F11...T32
			D				43M

IN ORDER TO IMPROVE THEIR PRODUCTION, MESSRS. NUOVA FIMA RESERVE THE RIGHT TO THEMSELVES TO MAKE ALL THE MODIFICATIONS THAT THEY DEEM INDISPENSABLE AT ANY TIME. UPDATED DATA-SHEETS ARE AVAILABLE ON SITE: www.nuovafima.com

Copyright © Nuova Fima srl. All rights reserved. Any part of this publication should not be reproduced without a written Nuova Fima's srl approval

NUOVA FIMA USA Inc.
www.nuovafima.com - e-mail: infousa@nuovafima.com
4123 Hollister, Suite G - TX 77080 Houston
TEL. +1 713.690.9800 - FAX +1 713.690.9803

NUOVA FIMA srl
www.nuovafima.com - e-mail: info@nuovafima.com
P.O. BOX 58 - VIA C. BATTISTI 59 - 28045 INVORIO (NO) ITALY
TEL. +39 0322 253200 - FAX +39 0322 253232

NUOVA FIMA

MGS32

bourdon tube "solid-front" pressure gauges for high pressures, turret case DS 4.5" (125 mm)

These instruments are built in conformity with the construction and safety specifications of **ASME B40.1**.
In case of leaks or break of the elastic element the operator is protected by a stainless steel safety cell solid front and by the blow-out back. They are mainly used on high pressure water jet technology like water cutting machines, hydro blasting pumps and turbines, hydrodemolition. The TIG welding between the safety cell and the process socket strengthens the instrument and assures a better tight in case of dampening fluid The advantages of filling the case of the instrument with a dampening fluid are: reduced pointer fluctuation, reduced wear of rotating parts of the movement when pulsant vibrations and pulsations occur. Moreover condensation and corrosive atmospheres which could damage the internal parts.

1.32.2 - Fillable Model

Ranges: 0...2500, 0...3000 and 0...4000 bar;
0...30000, 0...40000 and 0...60000 psi/bar.
Accuracy: Grade 1A as per ASME B40.1 (±1,0% of F.S.V.).
Ambient temperature: -13...+149 °F (-25...+65 °C).
Process fluid temperature: *-22...+302 °F* (-30...+150 °C).
Working pressure:
75% of FSV for static pressure;
66% of FSV for pulsating pressure.
Over pressure limit: 10% of FSV (temporary).
Protection degree: IP 67 as per IEC 529.
Socket material: AISI 316L st.st.
Bourdon tube: duplex st.st. seamless tube.
Case and blow out disk: strengthened polyammides with fiber glass , UV rays stabilized.
Ring: strengthened polypropylene, fiber glass.
Safety cell: stainless steel.
Window: safety glass.
Movement: stainless steel with internal limit stops for minimum and maximum pressure.
Dial: aluminium, white with black markings.
Pointer: adjustable, aluminium, black.

1.32.3 - Filled Model

Damping liquid: glycerine 98%, silicon oil.
Ambient temperature:
+32...+149 °F (0...+65 °C) with glycerine filling;
-40...+149 °F (-40...+65 °C) with silicon oil filling.
Process fluid temperature: max *+149°F* (+65 °C).
Other features: as Fillable Model.

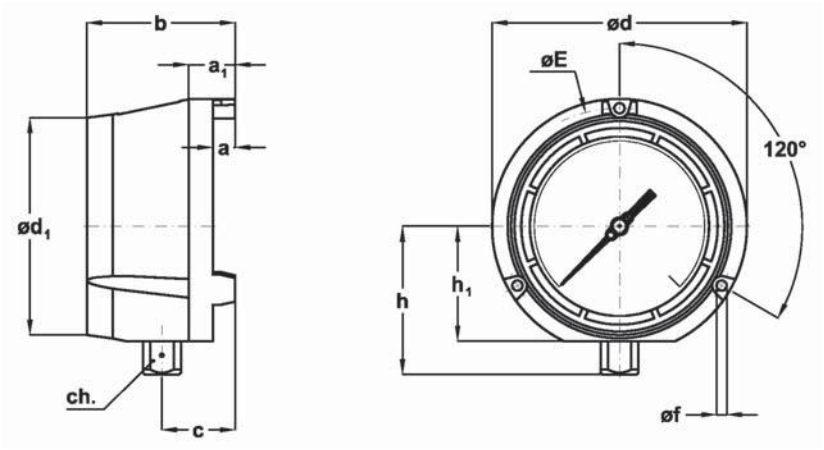

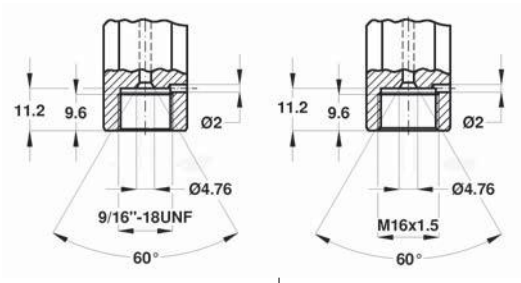

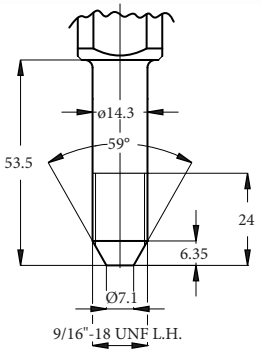

A - LOWER CONNECTION

Mounting	F	a	a_1	b	c	d	d_1	E	f	h	h_1	ch	Peso (1)
Lower	**IUF** 9/16-18 UNF-2B (1) **D7F** M16 x 1,5 **IUH** 9/16-18 UNF-L.H.	13	27	86	42	148	126	137	6,5	86	66,5	22	0,75 kg

(1) adasuitable for following fittings:
1/4" F250C Autoclave
1/4" HF4 - HiP
1/4" Newport AMINCO HP
1/4" HP Butech
(2) add 1.10 lbs (0,5 kg) when filled.

dimensions : mm

OPTIONS

Model	fillable	filled
F11 - Panel mounting kit	◆	◆
P01 - Suitable for filling with silicon and "Fluorolube"	◆	
S10 - Silicone filling		◆
T01 - Tropicalization	◆	◆

"HOW TO ORDER" SEQUENCE

Section / Model/Case /Mounting/ Diameter / Range / Process connection / Options

1	**32**	**2**	**A**	**F**	**D7F**	**F11...T01**
		3			**IUF**	

Copyright © Nuova Fima S.r.l. All rights reserved. Any part of this publication should not be reproduced without a written Nuova Fima's S.r.l. approval

NUOVA FIMA USA Inc.
www.nuovafima.com - e-mail: infousa@nuovafima.com
4123 Hollister, Suite G - TX 77080 Houston
TEL. +1 713.690.9800 - FAX +1 713.690.9803

NUOVA FIMA srl
www.nuovafima.com - e-mail: info@nuovafima.com
P.O. BOX 58 - VIA C. BATTISTI 59 - 28045 INVORIO (NO) ITALY
TEL. +39 0322 253200 - FAX +39 0322 253232

RC3 - 01/12
IN ORDER TO IMPROVE THEIR PRODUCTION, MESSRS. NUOVA FIMA RESERVE THE RIGHT TO THEMSELVES TO MAKE ALL THE MODIFICATIONS THAT THEY DEEM INDISPENSABLE AT ANY TIME. UPDATED DATA-SHEETS ARE AVAILABLE ON SITE: www.nuovafima.com

MGS8

bourdon tube pressure gauges
aluminium case
DS 10" (250 mm)

PED 2014/68/EU

These instruments are designed for use in chemical and petrochemical processing industries, and in conventional power plants, built to resist the most severe operating conditions, to measure gaseous or liquid media which do not have high viscosity or do not crystallize.

1.08.1 - Standard Model

Design: EN837-1.
Safety designation: S1 as per EN 837-2.
Ranges: from 0...1 to 0...1000 bar (or other equivalent units).
Accuracy class: 1 as per EN 837-1.
Ambient temperature: *-13...+149 °F* (-25...+65 °C).
Process fluid temperature: *-40...+302 °F* (-40...+150 °C).
Thermal drift: ±0,4 %/10 K of range (starting from *68°F* - 20°C).
Working pressure: 100% of FSV for static pressure;
90% of FSV for pulsating pressure.
Over pressure limit: 30% of FSV (max 12 hours).
Protection degree: IP 55 as per EN 60529/IEC 529.
Socket material: AISI 316L st.st.
Bourdon tube: AISI 316L st.st. seamless tube.
Case: black painted aluminium.
Ring: black painted aluminium.
Window: tempered glass.
Movement: stainless steel.
Dial: aluminium, white with black markings.
Pointer: not adjustable, aluminium, black.

RB3 - 04/13

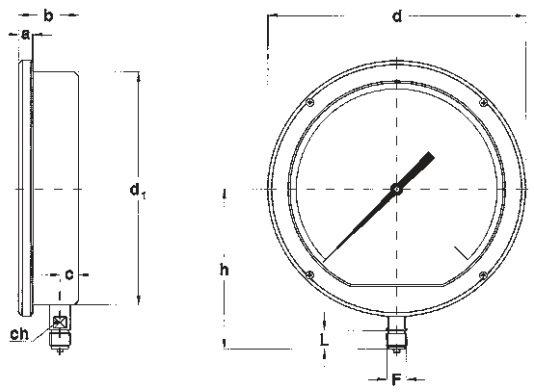

A - LOWER CONNECTION

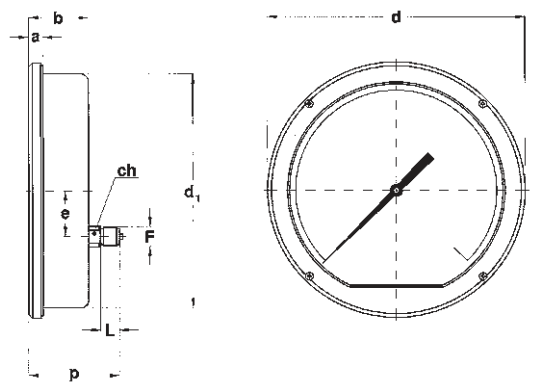

D - BACK CONNECTION

Mounting	F	a	b	c	d	d_1	e	h	p	ch	L	Weight
Lower	**41M** - G 1/2 A **43M** - 1/2-14 NPT	*0.59"* (15)	*2.48"* (63)	*0.76"* (19,5)	*10.62"* (270)	*9.72"* (247)		*6.69"* (170)		*0.66"* (17)	*0.78"* (20)	*6.83 lbs* (3,1 kg)
Back	**41M** - G 1/2 A **43M** - 1/2-14 NPT	*0.59"* (15)	*2.48"* (63)		*10.62"* (270)	*9.72"* (247)	*1.88"* (47,8)		*3.37"* (95,5)	*0.86"* (22)	*0.78"* (20)	*7.16 lbs* (3,25 kg)

OPTIONS

K06 -	Accuracy class 0.6 as per EN 837-1(1)
P02 -	Oxygen service

(1) available only for ranges *from 0...30 to 0...600 psi* (from 0...2,5 to 0...400 bar)

"HOW TO ORDER" SEQUENCE

Section / Model / Case / Mounting / Diameter / Range / Process connection / Options

1	**08**	**1**	**A**	**I**		**41M**	**K06...P02**
			D			**43M**	

IN ORDER TO IMPROVE THEIR PRODUCTION, MESSRS. NUOVA FIMA RESERVE THE RIGHT TO THEMSELVES TO MAKE ALL THE MODIFICATIONS THAT THEY DEEM INDISPENSABLE AT ANY TIME. UPDATED DATA-SHEETS ARE AVAILABLE ON SITE: **www.nuovafima.com**

Copyright © Nuova Fima srl. All rights reserved. Any part of this publication should not be reproduced without a written Nuova Fima's srl approval

NUOVA FIMA USA Inc.
www.nuovafima.com - e-mail: infousa@nuovafima.com
4123 Hollister, Suite G - TX 77080 Houston
TEL. +1 713.690.9800 - FAX +1 713.690.9803

NUOVA FIMA srl
www.nuovafima.com - e-mail: info@nuovafima.com
P.O. BOX 58 - VIA C. BATTISTI 59 - 28045 INVORIO (NO) ITALY
TEL. +39 0322 253200 - FAX +39 0322 253232

MGS18

bourdon tube pressure gauges
all stainless steel construction
DS 1.5", 2" (40-50 mm)

PED 2014/68/EU

These instruments are designed for use in chemical and petrochemical processing industries, and in conventional power plants, to measure gaseous or liquid media which do not have high viscosity or do not cristalize. They are built to resist the most severe operating conditions created by the ambient environment and the process medium. For use on power units, pumps, hydro-cleaning machines, presses, engine compressors, turbines, diesel engines, chemical, petrochemical and refrigerating plants and on machines and equipment where pulsating pressures or mechanical vibrations are apparent, the liquid-filled version is recommended.

01.18.1 - Standard Model, DS *1.5"* (40mm)

Design: EN 837-1.
Ranges: *from 0…30 to 0…600 psi* (from 0…2.5 to 0…40 bar or equivalent units).
Accuracy class: 1.6 as per EN 837-1.
Ambient temperature: *-13...+149 °F* (-25...+65 °C).
Process fluid temperature: *-22...+212 °F* (-30...+100 °C).
Thermal drift: ±0,4 %/10 °C of range (starting from *68°F* - 20°C).
Working pressure:
75% of FSV for static pressure;
66% of FSV for pulsating pressure.
Over pressure limit (15 min max):
25% of FSV.
Protection degree: IP 55 as per EN 60529/IEC 529.
Socket material: AISI 316L st.st.
Bourdon tube: AISI 316L st.st.
Case: stainless steel.
Ring: stainless steel, bayonet lock.
Window: glass.
Movement: stainless steel.
Dial: aluminium, white with black markings.
Pointer: not adjustable, aluminium, black.

01.18.1 - Standard Model, DS *2"* (50mm)

Ambient temperature: *-13...+149 °F* (-25...+65 °C).
Protecti on degree: IP 55 as per EN 60529/IEC 529.
Case: stainless steel, crimped.
Ring: stainless steel, crimped.
Window: plastic.
Other features: as Standard Model, DS *1.5"* (40mm).

01.18.2 - Fillable Model, DS *2"* (50mm)

Protecti on degree: IP 67 as per EN 60529/IEC 529.
Other features: as Standard Model, DS *2"* (50mm).

01.18.3 - Filled Model, DS *2"* (50mm)

Damping liquid: glycerine 98%.
Ambient temperature: *+32...+149 °F* (0...+65 °C).
Process fluid temperature: *max +149°F* (+65 °C).
Protecti on degree: IP 67 as per IEC 529.
Other features: as Standard Model, DS *2"* (50mm).

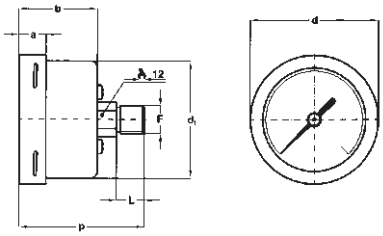

DS *1.5"* **(40mm)**
D - BACK CONNECTION

Mounting	DS	F	a	b	c	d	d_1	h	p	L	ch	Weight (1)
Lower	**B** *2"* (50)	**21M** - G 1/4 A **23M** - 1/4-18 NPT	*0.15"* (4)	*1.14"* (29)	*0.43"* (11)	*2.20"* (56)	*2.00"* (51)	*1.94" - 1.87"* (49,5 - *47,5*)		*0.59" - 0.51"* (15-13)	*0.55"* (14)	*0.20 lbs* (0,095 kg)
Back	**A** *1.5"* (40)	**11M** - G 1/8 A **13M** - 1/8-27 NPT	*0.37"* (9,5)	*1.08"* (27,5)		*1.77"* (45)	*1.61"* (41)		*1.73"* (44)	*0.39"* (10)	*0.47"* (12)	*0.15 lbs* (0,07 kg)
	B *2"* (50)	**11M** - G 1/8 A **13M** - 1/8-27 NPT	*0.15"* (4)	*1.14"* (29)		*2.20"* (56)	*2.00"* (51)		*1.81"* (46)	*0.39"* (10)	*0.47"* (12)	*0.17 lbs* (0,078 kg)

dimensions : *inches* (mm)

(1) add *0.09 lbs* (0,045 kg) when filled

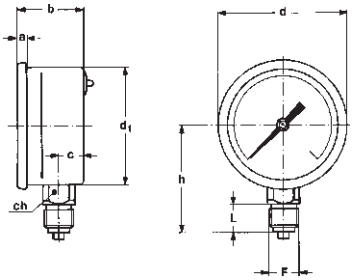

DS *2"* **(50mm)**
A - LOWER CONNECTION

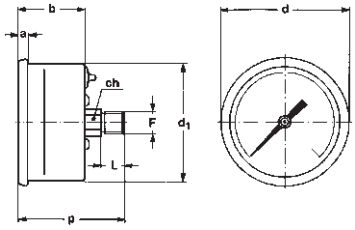

DS *2"* **(50mm)**
D - BACK CONNECTION

OPTIONS

Diameters	DS *1.5"* (40mm)	DS *2"* (50mm)
B - "Ring"-clamp, for back connection pressure gauges		◆
E65 - IP 65 execution	◆	

"HOW TO ORDER" SEQUENCE

Section / Model / Case / Mounting / Diameter / Range / Process connection / Options

1	**18**	**1**	**A**	**A**	**11M**	**B**
		2	**D**	**B**	**13M**	**E65...T30**
		3			**21M**	
					23M	

Copyright © Nuova Fima srl. All rights reserved. Any part of this publication should not be reproduced without a written Nuova Fima's srl approval

NUOVA FIMA USA Inc.
www.nuovafima.com - e-mail: infousa@nuovafima.com
4123 Hollister, Suite G - TX 77080 Houston
TEL. +1 713.690.9800 - FAX +1 713.690.9803

NUOVA FIMA srl
www.nuovafima.com - e-mail: info@nuovafima.com
P.O. BOX 58 - VIA C. BATTISTI 59 - 28045 INVORIO (NO) ITALY
TEL. +39 0322 253200 - FAX +39 0322 253232

IN ORDER TO IMPROVE THEIR PRODUCTION, MESSRS. NUOVA FIMA RESERVE THE RIGHT TO THEMSELVES TO MAKE ALL THE MODIFICATIONS THAT THEY DEEM INDISPENSABLE AT ANY TIME. UPDATED DATA-SHEETS ARE AVAILABLE ON SITE: **www.nuovafima.com**

MGS18

bourdon tube pressure gauge
all stainless steel construction
DS 2.5" (63mm)

PED 2014/68/UE

These instruments are built in conformity with the construction and safety S2 specifications of **EN 837-1.**
These instruments are designed for use in chemical and petrochemical processing industries, and in conventional power plants, to measure gaseous or liquid media which do not have high viscosity or do not cristalize. They are built to resist the most severe operating conditions created by the ambient environment and the process medium. For use on power units, pumps, hydro-cleaning machines, presses, engine compressors, turbines, diesel engines, chemical, petrochemical and refrigerating plants and on machines and equipment where pulsating pressures or mechanical vibrations are apparent, the liquid-filled version is recommended.

1.18.1 - Standard Model

Design: EN 837-1.
Safety designation: S1 as per EN 837-1.
Ranges: *from 0...15 to 0...15000 psi*; (from 0...1 to 0...1000 bar), (or other equivalent units).
Accuracy class: 1.6 as per EN 837-1.
Ambient temperature: *-40...+149 °F* (-40...+65 °C).
Process fluid temperature: *max +212°F* (+100 °C).
Thermal drift: ±0,4 %/10 °C of range (starting from *68°F* - 20°C).
Working pressure:
75% of FSV for static pressure;
66% of FSV for pulsating pressure.
Over pressure limit (15 min max):
25% of FSV for pressure ranges ≤ *1500 psi* (100 bar);
15% of FSV for pressure ranges *1500...9000 psi* (100...600 bar);
10% of FSV for pressure ranges over *9000 psi* (600 bar).
Protection degree: IP 55 as per EN 60529/IEC 529.
Socket material: AISI 316L st.st.
Bourdon tube: AISI 316L st.st.
Case: stainless steel.
Ring: stainless steel, bayonet lock.
Window: polycarbonate.
Movement: stainless steel.
Dial: plastic white with black markings.
Pointer: adjustable, aluminium, black.

1.18.2- Fillable Model

Safety designation: S2 as per EN 837-1.
Protection degree: IP 67 as per EN 60529/IEC 529.
Ring: stainless steel, crimped.
Pointer: not adjustable, aluminium, black.
Other features: as Standard Model.

1.18.3 - Filled Model

Safety designation: S2 as per EN 837-1.
Damping liquid: glycerine 98% or silicon oil.
Ambient temperature:
+32...+149 °F (0...+65 °C) with glycerine filling;
-4...+149 °F (-20...+65 °C) with glycerine filling mixture;
-40...+149 °F (-40...+65 °C) with silicon oil filling.
Process fluid temperature: *max +149°F* (+65 °C).
Protection degree: IP 67 as per EN 60529/IEC 529.
Ring: stainless steel, crimped.
Pointer: not adjustable, aluminium, black.
Other features: as Standard Model

bourdon tube pressure gauge
all stainless steel construction, DS 2.5" (63mm)

MGS18

RC8 - 04/13

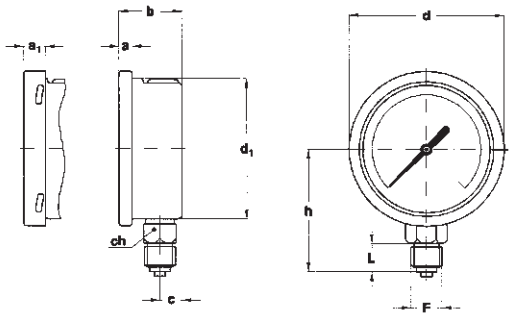

A - LOWER CONNECTION

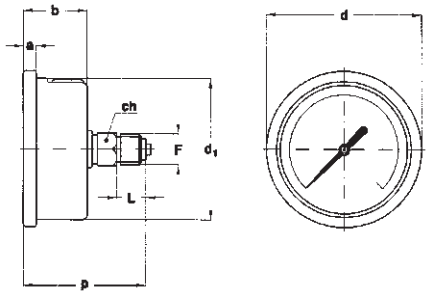

D - BACK CONNECTION

Mounting	F	a	a_1	b	c	d	d_1	h	p	L	ch	Weight (1)
Lower	**21M** - G 1/4 A **23M** - 1/4-18 NPT	*0.22"* (5,6)	*0.37"* (9,5)	*1.10"* (28)	*0.39"* (10)	*2.67"* (68)	*2.46"* (62,6)	*2.13" - 2.17"* (54,3 - 55,3)		*0.51"* (13)	*0.55"* (14)	*0.28 lbs* (0,13 kg)
Back	**21M** - G 1/4 A **23M** - 1/4-18 NPT	*0.22"* (5,6)	*0.37"* (9,5)	*1.10"* (28)		*2.67"* (68)	*2.46"* (62,6)		*2.11" - 2.15"* (53,8 - 54,8)	*0.51"* (13)	*0.55"* (14)	*0.30 lbs* (0,14 kg)

dimensions : *inches* (mm)

(1) add *0.15 lbs* (0,07 kg) when filled

OPTIONS

Model		standard	fillable	filled
B -	"U"-clamp, for back connection pressure gauges		◆	◆
C -	Back flange, for lower connection pressure gauges	◆	◆	◆
E -	Front flange, for back connection pressure gauges		◆	◆
P01 -	Suitable for filling with silicone		◆	
S10 -	Silicone filling			◆
G11 -	Glycerine filling mixture			◆
T37 -	Glass tempered window (1)	◆	◆	◆
T32 -	Safety glass window	◆		

(1) Safety designation: S1 as per EN 837-1.

"HOW TO ORDER" SEQUENCE

Section	Model	Case	Mounting	Diameter	Range	Process connection	Options
1	**18**	**1**	**A**	**C**		**21M**	**B, C, E**
		2	**D**			**23M**	**P01...T32**
		3					

Copyright © Nuova Fima srl. All rights reserved. Any part of this publication should not be reproduced without a written Nuova Fima's srl approval

NUOVA FIMA USA Inc.
www.nuovafima.com - e-mail: infousa@nuovafima.com
4123 Hollister, Suite G - TX 77080 Houston
TEL. +1 713.690.9800 - FAX +1 713.690.9803

NUOVA FIMA srl
www.nuovafima.com - e-mail: info@nuovafima.com
P.O. BOX 58 - VIA C. BATTISTI 59 - 28045 INVORIO (NO) ITALY
TEL. +39 0322 253200 - FAX +39 0322 253232

IN ORDER TO IMPROVE THEIR PRODUCTION, MESSRS. NUOVA FIMA RESERVE THE RIGHT TO THEMSELVES TO MAKE ALL THE MODIFICATIONS THAT THEY DEEM INDISPENSABLE AT ANY TIME. UPDATED DATA-SHEETS ARE AVAILABLE ON SITE: **www.nuovafima.com**

MGS18

bourdon tube pressure gauges
all stainless steel construction
DS 4", 6" (100-150mm)

PED 2014/68/UE ATEX 2014/34/UE

These instruments are designed for chemical, petrochemical industries and for conventional power plants. They are built to resist to the most severe conditions created by the process medium and by the environment and for those fluids, which have high viscosity and do not crystallize. The quality of the materials used to build the sensible element allows their use with high frequency pulsating pressures.

The TIG welding between the case and the process socket, strengthens the instrument and assures better containment of dampening fluid. The advantages of filling the case of the instrument with a dampening fluid are: reduced pointer fluctuation, reduced wear of rotating parts of the movement when pulsant vibrations and pulsations occur. Moreover condensation and corrosive atmospheres which could damage the internal parts are prevented.

1.18.1 - Standard Model

Design: EN837-1.
Safety designation: S1 as per EN 837-2.
Ranges: *from 0...15 to 0...30000 psi* (from 0...0,6 to 0...1600 bar or equivalent units).
Accuracy class: 1 as per EN 837-1.
Ambient temperature:
-40...+149 °F (-40...+65 °C), IP55 housing (EN 60529/IEC 529);
-58...+149 °F (-50...+65 °C), vented IP67 housing
(EN 60529/IEC 529).
Process fluid temperature: *-40...+302 °F* (-40...+150 °C).
Thermal drift: ±0,4 %/10 °C of range (starting from *68°F* - 20°C).
Working pressure:
100% of FSV for static pressure;
90% of FSV for pulsating pressure.
Over pressure limit: 30% of FSV (max 12 hours).
Socket material: AISI 316L st.st.
Bourdon tube, seamless tube: AISI 316L st.st. for pressure ranges up to *20000 psi* (0...1000 bar); Duplex st.st for range ≥ *20000 psi* (0...1400 bar)
Case and ring: stainless steel.
Window: tempered glass.
Movement: stainless steel with internal limit stops for minimum and maximum pressure.
Dial: aluminium, white with black markings.
Pointer: adjustable, aluminium, black.

1.18.2 - Fillable Model

Ambient temperature: *-40...+149 °F* (-40...+65 °C), IP 67 housing (EN 60529/IEC 529).
Pointer: not adjustable, aluminium, black.
Other features: as Standard Model.

1.18.3 - Filled Model

Ranges: f*rom 0...15 to 0...30000 psi* (from 0...1 to 0...1600 bar or equivalent units).
Damping liquid: glycerine 98% or silicon oil.
Ambient temperature:
+32...+149 °F (0...+65 °C) with glycerine filling;
-4...+149 °F (-20...+65 °C) with glycerine filling mixture;
-40...+149 °F (-40...+65 °C) with silicon oil fluid filling.
Process fluid temperature: *max +149°F* (+65 °C).
Protection degree: IP 67 as per EN 60529/IEC 529.
Pointer: not adjustable, aluminium, black.
Other features: as Standard Model.

INSTRUMENTS FOR OXYGEN

To suit safety criteria of standard EN837-1/2, the pressure gauges for oxygen service must be solid-front type (with baffle wall and safety bursting back).
Pressure gauges suitable for this service are detailed on MGS20 DS 4", 6" (100-150 mm) sheet.

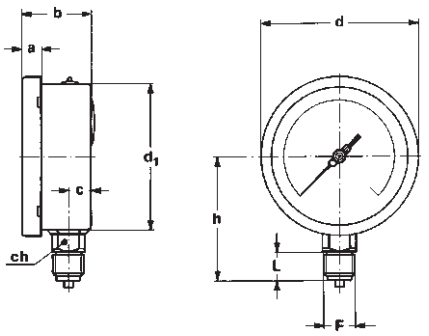

A - LOWER CONNECTION

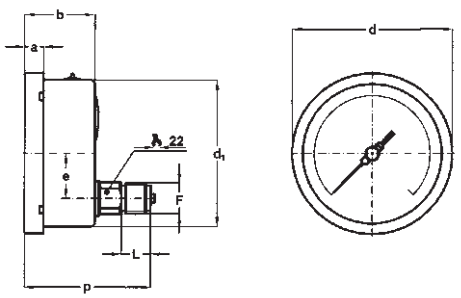

D - BACK CONNECTION

Mounting	DS	F	a	b	c	d	d_1	e	h	p	L	Weight (1)
Lower	E 4" (100)	41M - G 1/2 A 43M - 1/2-14 NPT	0.51" (13)	1.90" (48,5)	0.59" (15)	4.35" (110,6)	3.97" (101)		3.38" (86)		0.78" (20)	1.16 lbs (0,53 kg)
	G 6" (150)	41M - G 1/2 A 43M - 1/2-14 NPT	0.59" (15)	1.96" (50,5)	0.61" (15,5)	6.33" (161)	5.88" (149,6)		4.60 (117)		0.78" (20)	2.09 lbs (0,95 kg)
Back	E 4" (100)	41M - G 1/2 A 43M - 1/2-14 NPT	0.51" (13)	1.90" (48,5)		4.35" (110,6)	3.97" (101)	1.22" (31)		3.42" (87)	0.78" (20)	1.17 lbs (0,53 kg)
	G 6" (150)	41M - G 1/2 A 43M - 1/2-14 NPT	0.59" (15)	1.96" (50,5)		6.33" (161)	5.88" (149,6)	1.22" (31)		3.36" (85,5)	0.78" (20)	1.87 lbs (0,85 kg)

dimensions : *inches* (mm)

(1) add 0.72 lbs (0,33 kg) for DS 4" (100) and 1.65 lbs (0,78 kg) for DS 6" (150), when filled

OPTIONS

Model	standard	fillable	filled
B - "U"-clamp, for back connection pressure gauges	◆	◆	◆
C - Back flange, for lower connection pressure gauges	◆	◆	◆
E - Front flange, for back connection pressure gauges	◆	◆	◆
2G1 - ATEX II 2G c version (separate data sheet)	*See the ATEX pressure gauges data-.sheet for technical details*		
2D1 - ATEX II 2GD c version (separate data sheet)			
C40 - AISI 316J st. st. case and ring	◆	◆	◆
K06 - Accuracy class 0,6 (1)	◆	◆	
L21 - Maximum pointer IP 44 on plexiglas window DS 4" (100 mm) (2)	◆		
L22 - Maximum pointer IP 65 on plexiglas window DS 4" (100 mm) (2)	◆	◆	◆
P01 - Suitable for filling with silicone		◆	
S10 - Silicone filling			◆
G11 - Glycerine filling mixture, DS 4" (100 mm)			◆
ECV - Vented housing version, Ambient temperature -50...+65 °C (3) (4)	◆		
E67 - Protection degree IP67 (5)	◆		
T01 - Tropicalization	◆	◆	◆
T32 - Safety glass window	◆	◆	◆

(1) For pressure ranges up to *6000 psi* (400 bar). Not available for receivers.
(2) Accuracy refers to the area free from the maximum pointer action.
(3) to be ordered with E67 option
(4) not adjustable pointer
(5) to be ordered with ECV option

"HOW TO ORDER" SEQUENCE

Section / Model /Case / Mounting / Diameter / Range / Process connection / Options

1	18	1	A	E	41M	B, C, E
		2	D	G	43M	2G1...T32
		3				

Copyright © Nuova Fima srl. All rights reserved. Any part of this publication should not be reproduced without a written Nuova Fima's srl approval

NUOVA FIMA USA Inc.
www.nuovafima.com - e-mail: infousa@nuovafima.com
4123 Hollister, Suite G - TX 77080 Houston
TEL. +1 713.690.9800 - FAX +1 713.690.9803

NUOVA FIMA srl
www.nuovafima.com - e-mail: info@nuovafima.com
P.O. BOX 58 - VIA C. BATTISTI 59 - 28045 INVORIO (NO) ITALY
TEL. +39 0322 253200 - FAX +39 0322 253232

IN ORDER TO IMPROVE THEIR PRODUCTION, MESSRS. NUOVA FIMA RESERVE THE RIGHT TO THEMSELVES TO MAKE ALL THE MODIFICATIONS THAT THEY DEEM INDISPENSABLE AT ANY TIME. UPDATED DATA-SHEETS ARE AVAILABLE ON SITE: www.nuovafima.com

MGS20

bourdon tube "solid-front" pressure gauges
all stainless steel construction
DS 2.5" (63mm)

PED 2014/68/EU

These Solid-Front instruments are built in accordance with safety specifications of **EN 837-1 "S3"** and **ASME B40.1**.
The safety construction consists of a solid separating wall in stainless steel, placed between the scale and the elastic element and a blow out back which is released from the case whenever an internal pressure, due to leaks, is created or the elastic element is broken. A leak tight fit is ensured if the instrument is filled with a dampening fluid to prevent damage due to vibration. These instruments are designed for use in chemical and petrochemical processing industries, and in conventional power plants. They are built to resist the most severe operating conditions created by the ambient environment and the process medium.

1.20.1 - Standard Model

Design: EN 837-1.
Safety designation: S3 as per EN 837-2.
Ranges: *from 0...15 to 0...15000 psi;* from 0...1 to 0...1000 bar (or other equivalent units)
Accuracy class: 1,6 as per EN 837-1.
Ambient temperature: *-13...+149 °F* (-25...+65 °C).
Process fluid temperature: *max +212°F* (+100 °C).
Thermal drift: ±0,4 %/10 K of range (starting from *68°F* - 20°C).
Working pressure:
75% of FSV for static pressure;
66% of FSV for pulsating pressure.
Over pressure limit (15 min max):
25% of FSV for pressure ranges ≤ *1500 psi* (100 bar);
15% of FSV for pressure ranges over *1500 psi* (100 bar).
Protection degree: IP 55 as per EN 60529/IEC 529.
Socket material: AISI 316L st.st.
Bourdon tube: AISI 316L st.st.
Case: stainless steel.
Ring: stainless steel, bayonet lock.
Blow out disk: plastic.
Window: safety glass.
Movement: stainless steel.
Dial: plastic.
Pointer: adjustable, aluminium, black.

1.20.2 - Fillable Model

Protection degree: IP 67 as per EN 60529/IEC 529.
Pointer: not adjustable, aluminium, black.
Other features: as Standard Model.

1.20.3 - Filled Model

Damping liquid: glycerine 98%, silicon oil or fluorinated fluid.
Ambient temperature:
+32...+149 °F (0...+65 °C) with glycerine filling;
-40...+149 °F (-40...+65 °C) with silicon oil filling;
-40...+149 °F (-40...+65 °C) with fluorinated fluid filling.
Process fluid temperature: max *+149°F* (+65 °C).
Protection degree: IP 67 as per EN 60529/IEC 529.
Pointer: not adjustable, aluminium, black.
Other features: as Standard Model.

INSTRUMENTS FOR OXYGEN

Glicerine or silicone should not be used with highly oxidizing agents such as oxygen, chlorine, nitric acid or hydrogen peroxide, because of danger of spontaneous chemical reaction, inflammability or explosion. The use of fluorinates fluid is recommended in these cases.

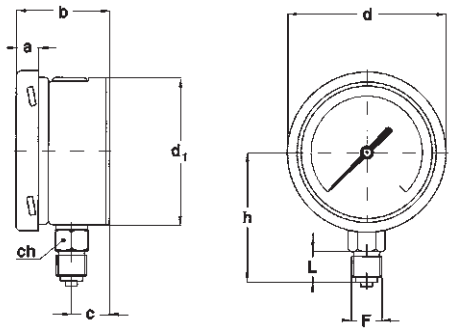

A - LOWER CONNECTION

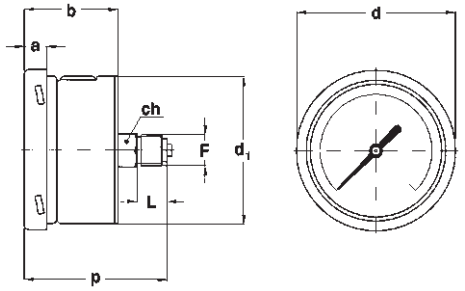

D - BACK CONNECTION

Mounting	F	a	b	c	d	d_1	h	p	L	ch	Weight (1)
Lower	21M - G 1/4 A 23M - 1/4-18 NPT	*0.39"* (10)	*1.57"* (40)	*0.65"* (16,7)	*2.67"* (68)	*2.46"* (62,6)	*2.13" - 2.17"* (54,3 - *55,3*)		*0.51"* (13)	*(0.55 x 0.31 - 0.55 x 0.35)* (14 x 8 - 14 x 9)	*0.44 lbs* (0,2 kg)
Back	21M - G 1/4 A 23M - 1/4-18 NPT	*0.39"* (10)	*1.57"* (40)		*2.67"* (68)	*2.46"* (62,6)		*2.32" - 2.36"* (59,1 - *60,1*)	*0.51"* (13)	*(0.55 x 0.31 - 0.55 x 0.35)* (14 x 8 - 14 x 9)	*0.50 lbs* (0,23 kg)

dimensions : *inches* (mm)

(1) add *0.22 lbs* (0,1 kg) when filled

OPTIONS

Model	standard	fillable	filled
E - Front flange, for back connection pressure gauges	◆	◆	◆
P01 - Suitable for filling with silicone/Fluorinated fluid		◆	
P02 - Oxygen service	◆	◆ (2)	◆ (1)
S10 - Silicone filling			◆
F30 - Fluorinated fluid filling			◆

(1) to be ordered only with instruments filled of fluorinated fluid
(2) to be ordered with instruments suitable for fluorinated fluid filling

"HOW TO ORDER" SEQUENCE

Section / Model / Case / Mounting / Diameter / Range / Process connection / Options

1	20	1	A	C	21M	E
		2	D		23M	P01...F30
		3				

Copyright © Nuova Fima srl. All rights reserved. Any part of this publication should not be reproduced without a written Nuova Fima's srl approval

IN ORDER TO IMPROVE THEIR PRODUCTION, MESSRS. NUOVA FIMA RESERVE THE RIGHT TO THEMSELVES TO MAKE ALL THE MODIFICATIONS THAT THEY DEEM INDISPENSABLE AT ANY TIME. UPDATED DATA SHEETS ARE AVAILABLE ON SITE: www.nuovafima.com

NUOVA FIMA USA Inc.
www.nuovafima.com - e-mail: infousa@nuovafima.com
4123 Hollister, Suite G - TX 77080 Houston
TEL. +1 713.690.9800 - FAX +1 713.690.9803

NUOVA FIMA srl
www.nuovafima.com - e-mail: info@nuovafima.com
P.O. BOX 58 - VIA C. BATTISTI 59 - 28045 INVORIO (NO) ITALY
TEL. +39 0322 253200 - FAX +39 0322 253232

MGS20

safety pressure gauges "solid-front"
all stainless steel construction
DS 4", 6" (100-150mm)

PED 2014/68/UE ATEX 2014/34/UE

These instruments are built in conformity with the construction and safety specifications of **EN 837-1/S3** e **ASME B40.1**.
In case of leaks or break of the elastic element, the operator is protected by a solid separating wall placed on the front of the instrument and by the blow out back. They are usually used in the food, process, pharmaceutical, petrochemical industries and in conventional and nuclear power plants. The TIG welding between the case and the process socket, strengthens the instrument and assures a better tight in case of dampening fluid. The advantages of filling the case of the instrument with a dampening fluid are: reduced pointer fluctuation, reduced wear of rotating parts of the movement when pulsant vibrations and pulsations occur. Moreover condensation and corrosive atmospheres which could damage the internal parts are prevented.

1.20.1 - Standard Model

Design: EN837-1.
Safety designation: S3 as per EN 837-2.
Ranges: *from 0...15 to 0...30000 psi* (from 0...0,6 to 0...1600 bar or equivalent units).
Accuracy class: 1 as per EN 837-1
Ambient temperature:
-40...+149 °F (-40...+65 °C), IP55 housing (IEC 529);
-58...+149 °F (-50...+65 °C), vented IP67 housing (IEC 529).
Process fluid temperature: *-40...+302 °F* (-40...+150 °C).
Thermal drift: ±0,4 %/10 °C of range (starting from *68°F* - 20°C).
Working pressure:
100% of FSV for static pressure;
90% of FSV for pulsating pressure.
Over pressure limit: 30% of FSV (max 12 hours).
Socket material: AISI 316L st.st.
Bourdon tube, seamless tube: AISI 316L st.st. for pressure ranges up to *20000 psi* (0...1000 bar); Duplex st.st for range ≥ *20000 psi* (0...1400 bar)
Case: stainless steel.
Ring: stainless steel, bayonet lock.
Blow out disk: stainless steel.
Window: safety glass (with external zero adjustement on request).
Movement: stainless steel with internal limit stops.
Dial: aluminium, white with black markings.
Pointer: adjustable, aluminium, black.

1.20.2 - Fillable Model - Lower connection only

Ambient temperature: *-40...+149 °F* (-40...+65 °C), IP 67 housing (IEC 529).
Pointer: not adjustable, aluminium, black.
Other features: as Standard Model.

1.20.3 - Filled Model - Lower connection only

Ranges: *from 0...15 to 0...30000 psi* (from 0...1 to 0...1600 bar or equivalent units)
Damping liquid: glycerine 98%, silicon oil or fluorinated fluid.
Ambient temperature:
+32...+149 °F (0...+65 °C) with glycerine filling;
-40...+149 °F (-40...+65 °C) with silicon oil filling and fluorinated fluid filling.
Process fluid temperature: max *+149°F* (+65 °C).
Protection degree: IP 67 as per IEC 529.
Pointer: not adjustable, aluminium, black.
Other features: as Standard Model.

INSTRUMENTS FOR OXYGEN - Glicerine or silicone should not be used with highly oxidizing agents such as oxygen, chlorine, nitric acid or hydrogen peroxide, because of danger of spontaneous chemical reaction, inflammability or explosion. The use of fluorinates fluid is recommended in these cases.

safety pressure gauges "solid-front"
all stainless steel construction, DS4", 6" (100-150mm)

MGS20

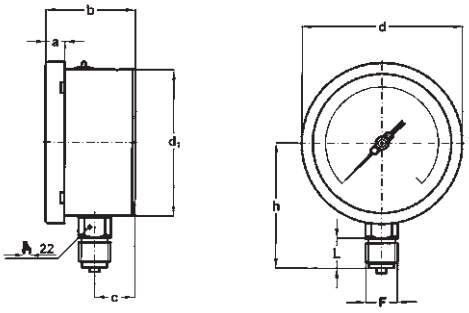

A - LOWER CONNECTION

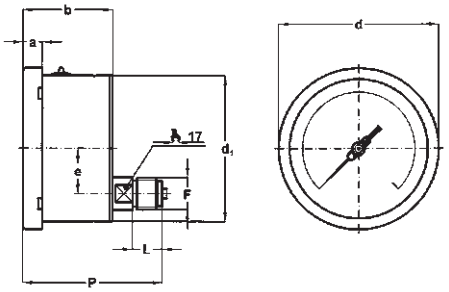

D - BACK CONNECTION
- Standard model only

Mounting	DS	F	a	b	c	d	d_1	e	h	p	L	Weight (1)
Lower	**E** *4"* (100)	**41M** - G 1/2 A **43M** - 1/2-14 NPT	*0.51"* (13)	*2.46"* (62,5)	*1.16"* (29,5)	*4.35"* (110,6)	*3.97"* (101)		*3.38"* (86)		*0.78"* (20)	*1.43 lbs* (0,65 kg)
	G *6"* (150)	**41M** - G 1/2 A **43M** - 1/2-14 NPT	*0.59"* (15)	*2.51"* (64)	*1.18"* (30)	*6.33"* (161)	*5.92"* (150,5)		*0.59"* (15)		*0.78"* (20)	*2.64 lbs* (1,2 kg)
Back	**E** *4"* (100)	**41M** - G 1/2 A **43M** - 1/2-14 NPT	*0.51"* (13)	*2.46"* (62,5)		*4.35"* (110,6)	*3.97"* (101)	*1.22"* (31)		*3.75"* (95,5)	*0.78"* (20)	*1.54 lbs* (0,70 kg)
	G *6"* (150)	**41M** - G 1/2 A **43M** - 1/2-14 NPT	*0.59"* (15)	*2.51"* (64)		*6.33"* (161)	*5.92"* (150,5)	*1.22"* (31)		*3.77"* (96)	*0.78"* (20)	*2.53 lbs* (1,15 kg)

dimensions : *inches* (mm)

(1) add *0.95 lbs* (0,43 kg) for DS *4"* (100) and *1.76 lbs* (0,8 kg) for DS *6"* (150), when filled

OPTIONS

Model	standard	fillable	filled
C - Back flange, for lower connection pressure gauges	◆	◆	◆
E - Front flange, for back connection pressure gauges	◆		
2G1 - ATEX version II 2G c	*Constructive characteristics and ordering guide please refere to the relevant ATEX version data sheet.*		
2D1 - ATEX version II 2GD c			
C40 - AISI 316L st. st. case, ring and blow out disk	◆	◆	◆
K06 - Accuracy class: 0,6 as per EN 837-1 (1)	◆	◆	
P01 - Suitable for filling with silicon and fluorinated fluid		◆	
P02 - Oxygen service (4)	◆	◆ (2)	◆ (3)
P03 - Compensating device, for DS *4"* (100 mm) only, lower mounting	◆	◆	◆
S10 - Silicone filling			◆
F30 - Fluorinated fluid filling			◆
ECV- Vented housing version, Ambient temperature -50...+65 °C (5) (6)	◆		
E67- Protection degree IP67 (7)	◆		
T01 - Tropicalization	◆	◆	◆

(1) For pressure ranges up to *6000 psi* (400 bar). Not available for receivers.
(2) to be ordered with instruments suitable for fluorinated fluid filling
(3) to be ordered with fluorinated fluid filled instruments
(4) For pressure ranges up to *15000 psi* (1000 bar)
(5) to be ordered with E67 option
(6) lower mounting and not adjustable pointer
(7) to be ordered with ECV option

"HOW TO ORDER" SEQUENCE

Section	Model	Case	Mounting	Diameter	Range	Process connection	Options
1	20	1	A	E		41M	C, E
		2	D	G		43M	2G1...T01
		3					

Copyright © Nuova Fima srl. All rights reserved. Any part of this publication should not be reproduced without a written Nuova Fima's srl approval

NUOVA FIMA USA Inc.
www.nuovafima.com - e-mail: infousa@nuovafima.com
4123 Hollister, Suite G - TX 77080 Houston
TEL. +1 713.690.9800 - FAX +1 713.690.9803

NUOVA FIMA srl
www.nuovafima.com - e-mail: info@nuovafima.com
P.O. BOX 58 - VIA C. BATTISTI 59 - 28045 INVORIO (NO) ITALY
TEL. +39 0322 253200 - FAX +39 0322 253232

RC6 - 05/14

IN ORDER TO IMPROVE THEIR PRODUCTION, MESSRS. NUOVA FIMA RESERVE THE RIGHT TO THEMSELVES TO MAKE ALL THE MODIFICATIONS THAT THEY DEEM INDISPENSABLE AT ANY TIME. UPDATED DATA-SHEETS ARE AVAILABLE ON SITE: www.nuovafima.com

MGS19

bourdon tube pressure gauges
HEAVY WORK
DS 4", 6" (100-150mm)

PED 2014/68/UE ATEX 2014/34/UE

These instruments are designed for use in chemical and petrochemical processing industries, and in conventional power plants.
They are built to resist the most severe operating conditions created by the ambient environment and the process medium. The high strength of the sensing element makes these instrument suitable to withstand high overpressure up to 4 times the full scale value and together with the case filling, they are suitable to high dynamic pulsating pressure. An Argonarc welded case/socket strengthens the whole construction.

1.19.1 - Standard Model

Design: EN837-1.
Safety designation: S1 as per EN 837-2.
Ranges: *from 0...15 to 0...10000 psi* (from 0...1 to 0...600 bar or equivalent units).
Accuracy class: 1 according to EN 837-1.
Ambient temperature:
-40...+149 °F (-40...+65 °C), IP55 housing (EN 60529/IEC 529);
-58...+149 °F (-50...+65 °C), vented IP67 housing (EN 60529/IEC 529).
Process fluid temperature: *-40...+302°F* (-40...+150 °C).
Thermal drift: ±0,4 %/10 °C of range (starting from *68°F*- 20°C).
Working pressure :
100% of FSV for static pressures;
90% of FSV for pulsating pressures.
Overpressures: up to 400% of FSV (see tables at pag. 2)
Socket material: in AISI 316L.
Bourdon tube: in AISI 316L steamless tube.
Case: stainless steel.
Ring: stainless steel, bayonet lock.
Window: safety glass.
Movement: stainless steel with internal limit stops.
Dial: aluminium, white with black markings.
Pointer: adjustable, aluminium, black.

1.19.2 - Fillable Model

Ambient temperature: *-40...+149 °F* (-40...+65 °C), IP 67 housing (EN 60529/IEC 529).
Other features: as Standard Model.

1.19.3 - Filled Model

Accuracy Class: 1,6 as per EN 837-1.
Damping liquid: gliycerine 98% or silicon oil.
Ambient temperature:
+32...+149°F (0...+65 °C) with glycerine filling;
-40...+149°F (-40...+65 °C) with silicon oil filling or fluorinated fluid filling.
Process fluid temperature: *+149°F* (+65 °C).
Protection degree: IP 67 as per EN 60529/IEC 529.
Other features: as Standard Model.

OXYGEN INSTRUMENTS

To suit criteria of standard EN837-1/2, the pressure gauges for oxygen service must be solid- front type (with baffle wall and safety bursting back).
Pressure gauges suitable for this service are detailed on MGS21 sheet.

bourdon tube pressure gauges
HEAVY WORK, DS 4", 6" (100-150mm)

MGS19

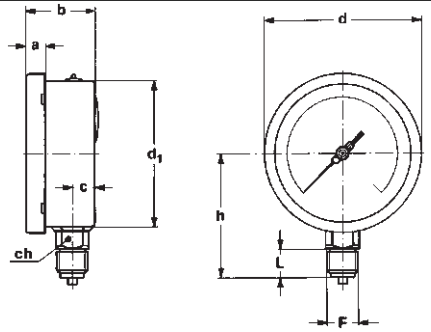

A - LOWER CONNECTION

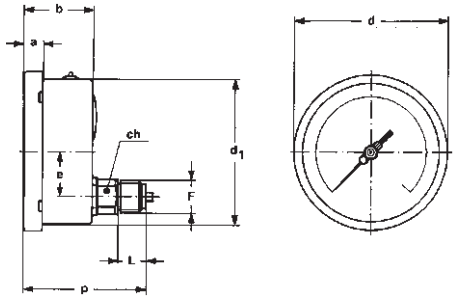

D - BACK CONNECTION

Mounting	DS	F	a	b	c	d	d_1	e	h	p	L	ch	Weight (1)
Lower	**E** 4" (100)	**41M** - G 1/2 A **43M** - 1/2-14 NPT	*0.51"* (13)	*1.90"* (48,5)	*0.59"* (15)	*4.35"* (110,6)	*3.97"* (101)		*3.38"* (86)		*0.78"* (20)	*0.87"* (22)	*1.16 lbs* (0,53 kg)
	G 6" (150)	**41M** - G 1/2 A **43M** - 1/2-14 NPT	*0.59"* (15)	*1.98"* (50,5)	*0.61"* (15,5)	*6.33"* (161)	*5.88"* (149,6)		*4.60"* (117)		*0.78"* (20)	*0.87"* (22)	*2.24 lbs* (1,02 kg)
Back	**E** 4" (100)	**41M** - G 1/2 A **43M** - 1/2-14 NPT	*0.51"* (13)	*1.90"* (48,5)		*4.35"* (110,6)	*3.97"* (101)	*1.22"* (31)		*3.42"* (87)	*0.78"* (20)	*0.87"* (22)	*1.14 lbs* (0,52 kg)
	G 6" (150)	**41M** - G 1/2 A **43M** - 1/2-14 NPT	*0.59"* (15)	*1.98"* (50,5)		*6.33"* (161)	*5.88"* (149,6)	*1.22"* (31)		*3.36"* (85,5)	*0.78"* (20)	*0.87"* (22)	*2.09 lbs* (0,95 kg)

dimensions : *inches* (mm)

(1) add 0.72 lbs (0,33 kg) for DS 4" (100) and 1.65 lbs (0,78 kg) for DS 6" (150), when filled

RANGES

bar (1)	Ranges	0...1	0...1,6	0...2,5	0...4	0...6	0...10	0...16	0...25	0...40	0...60	0...100	0...160	0...250	0...400	0...600
	Overpressure	4	6	10	16	25	40	48	75	80	120	200	320	500	800	1200

psi	*Ranges*	*0...15*	*0...30*	*0...60*	*0...100*	*0...160*	*0...200*	*0...300*	*0...400*	*0...600*	*0...1000*	*0...1500*	*0...2000*	*0...3000*	*0...4000*	*0...6000*	*0...10000*
	Overpressure	*60*	*120*	*240*	*400*	*480*	*600*	*900*	*1000*	*1200*	*2000*	*3000*	*4000*	*6000*	*8000*	*10000*	*15000*

bar (1)	Ranges	-1...0	-1...0,6	-1...1,5	-1...3	-1...5	-1...9	-1...15	-1...24
	Overpressure	3	5	9	15	23	39	47	75

(1) Available measurement units kPa, MPa, kg/cm²

psi	Ranges (2)	-30...0	-30...15	-30...30	-30...150
	Overpressure	45	100	125	450

(2) Vacuum measurement unit: InHg

OPTIONS

Model	standard	fillable	filled
B - "U"-clamp, for back connection pressure gauges	◆	◆	◆
C - Back flange, for lower connection pressure gauges	◆	◆	◆
E - Front flange, for back connection pressure gauges	◆	◆	◆
2G1 - ATEX II 2G c version **2D1** - ATEX II 2GD c version	*See the ATEX pressure gauges data-.sheet for technical details*		
C40 - AISI 316L st. st. case, ring and blow out disk	◆	◆	◆
P01 - Suitable for filling with silicone		◆	
S10 - Silicone filling			◆
ECV - Vented housing version, Ambient temperature -50...+65 °C (1) (2)			
E67 - Protection degree IP67 (3)	◆		
T01 - Tropicalization	◆	◆	◆

(1) to be ordered with E67 option
(2) not adjustable pointer
(3) to be ordered with ECV option

"HOW TO ORDER" SEQUENCE

Section / Model /Case / Mounting / Diameter / Range / Process connection / Options

1	**19**	**1**	**A**	**E**	**41M**	**B, C, E**
		2	**D**	**G**	**43M**	**2G1...T01**
		3				

Copyright © Nuova Fima srl. All rights reserved. Any part of this publication should not be reproduced without a written Nuova Fima's srl approval

IN ORDER TO IMPROVE THEIR PRODUCTION, MESSRS. NUOVA FIMA RESERVE THE RIGHT TO THEMSELVES TO MAKE ALL THE MODIFICATIONS THAT THEY DEEM INDISPENSABLE AT ANY TIME. UPDATED DATA-SHEETS ARE AVAILABLE ON SITE: www.nuovafima.com

NUOVA FIMA USA Inc.
www.nuovafima.com - e-mail: infousa@nuovafima.com
4123 Hollister, Suite G - TX 77080 Houston
TEL. +1 713.690.9800 - FAX +1 713.690.9803

NUOVA FIMA srl
www.nuovafima.com - e-mail: info@nuovafima.com
P.O. BOX 58 - VIA C. BATTISTI 59 - 28045 INVORIO (NO) ITALY
TEL. +39 0322 253200 - FAX +39 0322 253232

MGS21

bourdon tube "solid-front" pressure gauges
HEAVY WORK
DS 4", 6" (100-150mm)

PED 2014/68/UE ATEX 2014/34/UE

These instruments are designed for use in chemical and petrochemical processing industries, and in conventional power plants.They are built to resist the most severe operating conditions created by the ambient environment and the process medium. The high strength of the sensing element makes these instrument suitable to withstand high overpressure up to 4 times the full scale value and together with the case filling, they are suitable to high dynamic pulsating pressure. An Argonarc welded case/socket strengthens the whole construction. The **solid-front** version of these instruments is built in accordance with safety specifications of **EN 837-1** and **ASME B40.1.** The safety construction consists of a **solid separating wall** in stainless steel, placed between the dial and the elastic element and a **blow out back** which is released from the case whenever an internal pressure, due to leaks, is created or the elastic element is broken.

1.21.1 - Standard Model

Design: EN 837-1.
Safety designation: S3 as per EN 837-2.
Campi scala: *from 0...15 to 10000 psi*; (from 0...1 to 0...600 bar or other equivalent units)
Accuracy class: 1 as per EN 837-1.
Ambient temperature:
-40...+149 °F (-40...+65 °C), IP55 housing (EN 60529/IEC 529);
-58...+149 °F (-50...+65 °C), vented IP67 housing
(EN 60529/IEC 529).
Process fluid temperature: *-40...+302°F* (-40...+150 °C).
Thermal drift: ±0,4 %/10 °C of range (starting from *68°F* - 20°C).
Working pressure:
100% del FSV for static pressure;
90% del FSV for pulsating pressure.
Overpressure limit: 400% of FSV (see table at pag. 2)
Socket material: AISI 316L st.st.
Bourdon tube: AISI 316L st.st. steamless tube
Case: stainless steel.
Ring: stainless steel, bayonet lock.
Blow out disc: stainless steel.
Window: safety glass.
Movement: stainless steel with internal limit stop.
Dial: aluminium, white with black markings
Pointer: adjustable, aluminium, black.

1.21.2 - Fillable Model - Lower connection only

Ambient temperature: *-40...+149 °F* (-40...+65 °C), IP 67 housing (EN 60529/IEC 529).
Other features: as Standard Model.

1.21.3 - Filled Model - Lower connection only

Accuracy class: 1,6 as per EN 837-1.
Damping liquid: glycerine 98%, silicon oil or fluorinated fluid.
Ambient temperature:
+32...+149°F (0...+65 °C) with glycerine filling;
-40...+149°F (-40...+65 °C) with silicon oil filling or fluorinated fluid filling.
Process fluid temperature: *max +149°F* (+65 °C).
Protection degree: IP 67 as per EN 60529/IEC 529.
Window: tempered glass.
Other features: as Standard Model.

OXYGEN INSTRUMENTS

Glycerine and silicon oil should not be used with highly oxydizing agents as oxygen, chlorine, nitric acid or hydrogrn peroxide because of danger of spontaneous chemical reaction, inflammability or explosion. The use of fluorinates fluid is recommended in these cases.

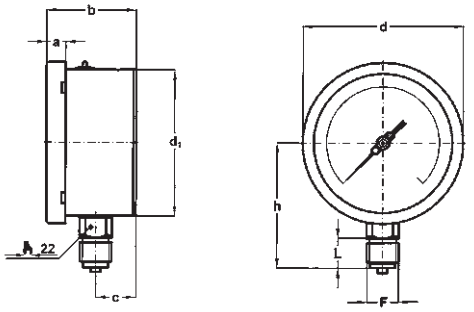

A - LOWER CONNECTION

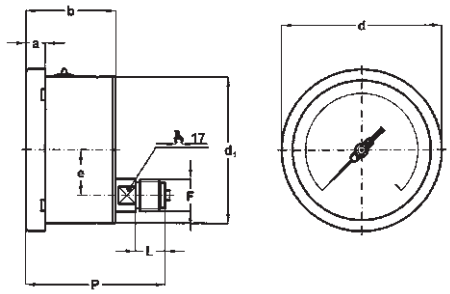

D - BACK CONNECTION

Mounting	DS	F	a	b	c	d	d_1	e	h	p	L	Weight
Lower	E 4" (100)	41M - G 1/2 A 43M - 1/2-14 NPT	0.51" (13)	2.46" (62,5)	1.16" (29,5)	4.35" (110,6)	3.97" (101)		3.38" (86)		0.78" (20)	1.43 lbs (0,65 kg)
	G 6" (150)	41M - G 1/2 A 43M - 1/2-14 NPT	0.59" (15)	2.51" (64)	1.18" (30)	6.33" (161)	5.92" (150,5)		4.60" (117)		0.78" (20)	2.64 lbs (1,2 kg)
Back	E 4" (100)	41M - G 1/2 A 43M - 1/2-14 NPT	0.51" (13)	2.46" (62,5)		4.35" (110,6)	3.97" (101)	1.22" (31)		3.75" (95,5)	0.78" (20)	1.54 lbs (0,70 kg)
	G 6" (150)	41M - G 1/2 A 43M - 1/2-14 NPT	0.59" (15)	2.51" (64)		6.33" (161)	5.92" (150,5)	1.22" (31)		3.77" (96)	0.78" (20)	2.53 lbs (1,15 kg)

dimensions : *inches* (mm)

(1) add *0.95 lbs* (0,43 kg) for DS *4"* (100) and *1.76 lbs* (0,8 kg) for DS *6"* (150), when filled

bar (1)	Ranges	0...1	0...1,6	0...2,5	0...4	0...6	0...10	0...16	0...25	0...40	0...60	0...100	0...160	0...250	0...400	0...600
	Overpressure	4	6	10	16	25	40	48	75	80	120	200	320	500	800	1200

psi	Ranges	0...15	0...30	0...60	0...100	0...160	0...200	0...300	0...400	0...600	0...1000	0...1500	0...2000	0...3000	0...4000	0...6000	0...10000
	Overpressure	60	120	240	400	480	600	900	1000	1200	2000	3000	4000	6000	8000	10000	15000

bar (1)	Ranges	-1...0	-1...0,6	-1...1,5	-1...3	-1...5	-1...9	-1...15	-1...24
	Overpressure	3	5	9	15	23	39	47	75

(1) Available measurement units kPa, MPa, kg/cm²

psi	Ranges (2)	-30...0	-30...15	-30...30	-30...150
	Overpressure	45	100	125	450

(2) Vacuum measurement unit: InHg

Model	standard	fillable	filled
C - Back flange, for lower connection pressure gauges	◆	◆	◆
E - Front flange, for back connection pressure gauges	◆		
2G1 - ATEX II 2G c version	*See the ATEX pressure gauges data-sheet for technical details*		
2D1 - ATEX II 2GD c version			
C40 - AISI 316L st. st. case, ring and blow out disc	◆	◆	◆
P01 - Suitable for filling with silicone/fluorinated fluid		◆	
P02 - Oxygen service	◆	◆ (1)	◆ (2)
P03 - Compensating device, for DS *4"* (100 mm) and lower mounting only	◆	◆	◆
S10 - Silicone filling			◆
F30 - Fluorinated fluid filling			◆
ECV - Vented housing version, Ambient temperature -50...+65 °C (3) (4)	◆		
E67 - Protection degree IP67 (5)	◆		
T01 - Tropicalization	◆	◆	◆

(1) to be ordered with instruments suitable for fluorinated fluid filling

(2) to be ordered with fluorinated fluid filled instruments
(3) to be ordered with E67 option
(4) lower mounting and not adjustable pointer
(5) to be ordered with ECV option

"HOW TO ORDER" SEQUENCE

Section / Model /Case / Mounting / Diameter / Range / Process connection / Options

1	21	1	A	E	41M	C, E
		2	D	G	43M	2G1...T01
		3				

Copyright © Nuova Fima srl. All rights reserved. Any part of this publication should not be reproduced without a written Nuova Fima's srl approval

IN ORDER TO IMPROVE THEIR PRODUCTION, MESSRS. NUOVA FIMA RESERVE THE RIGHT TO THEMSELVES TO MAKE ALL THE MODIFICATIONS THAT THEY DEEM INDISPENSABLE AT ANY TIME. UPDATED DATA-SHEETS ARE AVAILABLE ON SITE: www.nuovafima.com

NUOVA FIMA USA Inc.
www.nuovafima.com - e-mail: infousa@nuovafima.com
4123 Hollister, Suite G - TX 77080 Houston
TEL. +1 713.690.9800 - FAX +1 713.690.9803

NUOVA FIMA srl
www.nuovafima.com - e-mail: info@nuovafima.com
P.O. BOX 58 - VIA C. BATTISTI 59 - 28045 INVORIO (NO) ITALY
TEL. +39 0322 253200 - FAX +39 0322 253232

MGS22

safety pressure gauges "solid-front" all stainless steel construction for high pressures, DS 4", 6" (100-150mm)

PED 2014/68/UE

These instruments are built in conformity with the construction and safety specifications of **EN 837-1/S3** e **ASME B40.1**.
In case of leaks or break of the elastic element, the operator is protected by a solid separating wall placed on the front of the instrument and by the blow out back. They are mainly used on high pressure water jet technology like water cutting machines, hydro blasting pumps and turbines, hydrodemolition. The TIG welding between the case and the process socket, strengthens the instrument and assures a better tight in case of dampening fluid. The advantages of filling the case of the instrument with a dampening fluid are: reduced pointer fluctuation, reduced wear of rotating parts of the movement when pulsant vibrations and pulsations occur. Moreover condensation and corrosive atmospheres which could damage the internal parts are prevented.

1.22.1 - Standard Model

Design: S3 as per EN 837-2.
Ranges: 0...2500, 0...3000 and 0...4000 bar;
0...30000, 0...40000 and 0...60000 psi/bar.
Accuracy class: ±1% of F.S.V.
Ambient temperature: -40...+149 °F (-40...+65 °C).
Process fluid temperature: *-40...+302 °F* (-40...+150 °C).
Thermal drift: ±0,4 %/10 °C of range (starting from *68°F* - 20°C).
Working pressure:
75% of FSV for static pressure;
66% of FSV for pulsating pressure.
Over pressure limit: 10% of FSV (temporary).
Protection degree: IP 55 as per IEC 529.
Socket material: AISI 316L st.st.
Bourdon tube: duplex st.st. seamless tube.
Case: stainless steel.
Ring: stainless steel, bayonet lock.
Blow out disk: stainless steel.
Window: safety glass.
Movement: stainless steel with internal limit stops.
Dial: aluminium, white with black markings.
Pointer: adjustable, aluminium, black.

1.22.2 - Fillable Model

Protection degree: IP 67 as per IEC 529.
Pointer: not adjustable, aluminium, black.
Other features: as Standard Model.

1.22.3 - Filled Model

Damping liquid: glycerine 98%, silicon oil.
Ambient temperature:
+32...+149 °F (0...+65 °C) with glycerine filling;
-40...+149 °F (-40...+65 °C) with silicon oil filling.
Process fluid temperature: max *+149°F* (+65 °C).
Protection degree: IP 67 as per IEC 529.
Pointer: not adjustable, aluminium, black.
Other features: as Standard Model.

RC3 - 08/14

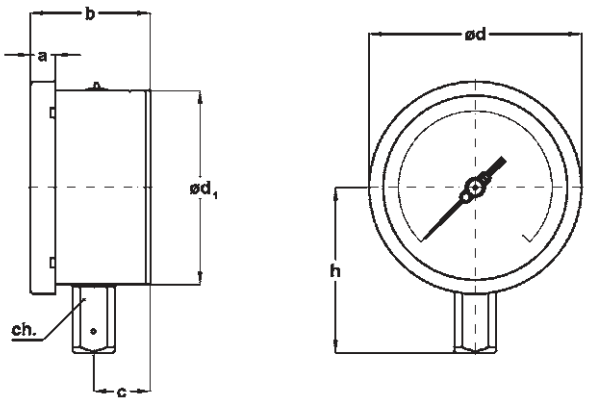

A - LOWER CONNECTION

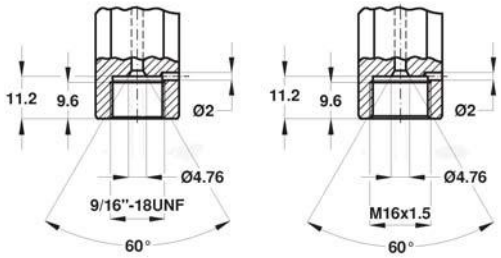

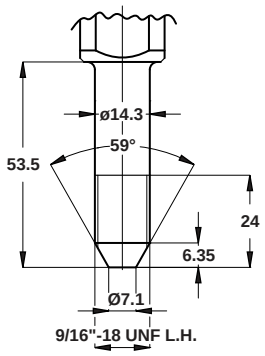

IUH

Mounting	DS	F	a	b	c	ø d	ø d_1	h	ch	Weight (2)
Lower	E 4" (100)	IUF - 9/16-18 UNF-2B (1) D7F - M16 x 1,5	13	62	29,5	110,5	101	86	22	0,75 kg
		IUH- 9/16-18 UNF-L.H.						120		
	G 6" (150)	IUF - 9/16-18 UNF-2B (1) D7F - M16 x 1,5	15	64	30	161	150,5	110	22	1,2 kg
		IUH- 9/16-18 UNF-L.H.						140		

(1) suitable for following fittings:
1/4" F250C Autoclave
1/4" HF4 - HiP
1/4" Newport AMINCO HP
1/4" HP Butech

(2) add *0.95 lbs* (0,43 kg) for DS *4"* (100) and *1.76 lbs* (0,8 kg) for DS *6"* (150), when filled

dimensions : mm

OPTIONS

Model	standard	fillable	filled
C - Back flange, for lower connection pressure gauges	◆	◆	◆
C40 - AISI 316L st. st. case, blow out disk and ring	◆	◆	◆
P01 - Suitable for filling with silicon oil		◆	
S10 - Silicone filling			◆
T01 - Tropicalization	◆	◆	◆

"HOW TO ORDER" SEQUENCE

Section / Model/Case /Mounting/ Diameter / Range / Process connection / Options

1	22	1	A	E	D7F	C
		2		G	IUF	C40...T01
		3			IUH	

IN ORDER TO IMPROVE THEIR PRODUCTION, MESSRS. NUOVA FIMA RESERVE THE RIGHT TO THEMSELVES TO MAKE ALL THE MODIFICATIONS THAT THEY DEEM INDISPENSABLE AT ANY TIME. UPDATED DATA-SHEETS ARE AVAILABLE ON SITE: www.nuovafima.com

Copyright © Nuova Fima srl. All rights reserved. Any part of this publication should not be reproduced without a written Nuova Fima's srl approval

NUOVA FIMA USA Inc.
www.nuovafima.com - e-mail: infousa@nuovafima.com
4123 Hollister, Suite G - TX 77080 Houston
TEL. +1 713.690.9800 - FAX +1 713.690.9803

NUOVA FIMA srl
www.nuovafima.com - e-mail: info@nuovafima.com
P.O. BOX 58 - VIA C. BATTISTI 59 - 28045 INVORIO (NO) ITALY
TEL. +39 0322 253200 - FAX +39 0322 253232

MGS44

bourdon tube pressure gauges
stainless steel construction
DS 4" (100mm)

PED 2014/68/EU

ATEX 2014/34/EU

They are designed for industrial use. They are suitable for tough working conditions and for aggressive fluids. An exclusive Laser calibration procedure features each instrument and allows a very precise accuracy. Filling the case with dampening liquid prevents any condensation and the entrance of corrosive atmosphere increasing its resistance to vibrations and to pulsating pressures.

1.44.2 - Fillable Model

Design: EN 837-1.
Safety designation: S1 as per EN 837-2.
Ranges: *from 0...15 to 0...6000 psi* (from 0...1 to 0...400 bar or equivalent units).
Accuracy class: 1,6 as per EN 837-1.
Ambient temperature: *-13...+149°F* (-25...+65 °C).
Process fluid temperature: *-13...+212 °F* (-25...+100 °C).
Thermal drift: max ±0,4 %/10 °C of scale range (starting from *+68°F*- 20°C).
Working pressure:
75% of FSV for static pressure.
66% of FSV for pulsating pressure.
Over pressure limit (15 min max):
25% of FSV for pressure ranges ≤ *1500 psi* (100 bar);
15% of FSV for pressure ranges over *1500 psi* (100 bar).
Protection degree: IP 67 as per IEC 529.
Socket material: AISI 316L st.st.
Elastic element: AISI 316L st.st.
Case: stainless steel
Ring: stainless stees, crimped
Window: tempered glass.
Movement: copper and stainless steel.
Dial: aluminium, white with black markings, or with double red and black markings.
Pointer: not adjustable, aluminium,black.

1.44.3 - Filled Model

Damping liquid: glycerine 98%, silicon oil.
Ambient temperature:
+32...+149 °F (0...+65 °C) with glycerine filling;
-40...+149 °F (-40...+65 °C) with silicon oil filling.
Process fluid temperature: *max +149°F* (+65 °C).
Other features: as fillable model.

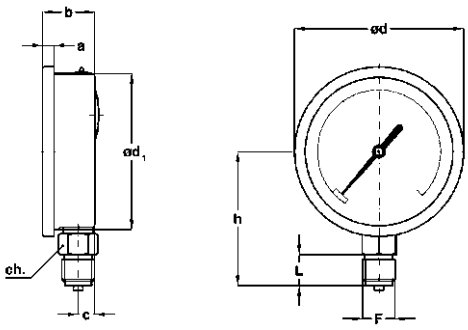

A - LOWER CONNECTION

F	a	b	c	ø d	ø d_1	h	ch	L	Weight
41M - G 1/2 A	*0.29"* (7,5)	*1.34"* (34)	*0.43"* (11)	*4.33"* (110)	*3.97"* (101)	*3.43"* (87)	*0.87"* (22)	*0.78"* (20)	*0.88 lbs (1)* (0,4 kg)
43M - 1/2-14 NPT									

dimensions : *inches* (mm)

(1) Add *0.5 Ibs* (0,23 kg) when filled

OPTIONS

Model	fillable	filled
C - Back flange	◆	◆
2M1 - ATEX II 2G c IIA/B version (1)	≤ 6 bar	
2N1 - ATEX II 2GD c IIA/B version (1)	≥ 10 bar	◆
ARM - Stainless steel bayonet lock ring	◆	◆
L02 - Adjustable pointer (2)	◆	◆
K10 - Accuracy class 1 as per EN 837-1.	1...400 bar	4...40 bar
M02 - Stainless steel movement	◆	◆
P01 - Suitable for filling with silicone	◆	
S10 - Silicone filling		◆
TPC - Polycarbonate window	◆	◆
V11 - St.st. restrictor 0,7 mm	◆	◆

(1) To be ordered with polycarbonate window only. Suitable for installation with IIA and IIB gas types only. See the ATEX pressure gauges data-sheet for technical details
(2) To be order with bayonet lock ring

"HOW TO ORDER" SEQUENCE

Section / Model / Case / Mounting / Diameter / Range / Process connection / Options

1	**44**	**2**	**A**	**E**	**41M**	**C**
		3			**43M**	**2M1...V11**

Copyright © Nuova Fima srl. All rights reserved. Any part of this publication should not be reproduced without a written Nuova Fima's srl approval

IN ORDER TO IMPROVE THEIR PRODUCTION, MESSRS. NUOVA FIMA RESERVE THE RIGHT TO THEMSELVES TO MAKE ALL THE MODIFICATIONS THAT THEY DEEM INDISPENSABLE AT ANY TIME. UPDATED DATA-SHEETS ARE AVAILABLE ON SITE: www.nuovafima.com

NUOVA FIMA USA Inc.
www.nuovafima.com - e-mail: infousa@nuovafima.com
4123 Hollister, Suite G - TX 77080 Houston
TEL. +1 713.690.9800 - FAX +1 713.690.9803

NUOVA FIMA srl
www.nuovafima.com - e-mail: info@nuovafima.com
P.O. BOX 58 - VIA C. BATTISTI 59 - 28045 INVORIO (NO) ITALY
TEL. +39 0322 253200 - FAX +39 0322 253232

MGS36

bourdon tube pressure gauges
NACE MR0103/MR0175 - ISO 15156-3 version
DS 4", 6" (100-150mm)

PED 2014/68/UE ATEX 2014/34/UE

These instruments are designed for petrochemical industry. They are built to resist to the most severe conditions created by H_2S, by the environment and for those fluids, which have high viscosity and do not crystallize. The quality of the materials used to build the sensible element allows their use with high frequency pulsating pressures. The TIG welding between the case and the process socket, strengthens the instrument and assures a better tight in case of dampening fluid. The advantages of filling the case of the instrument with a dampening fluid are: reduced pointer fluctuation, reduced wear of rotating parts of the movement when pulsant vibrations and pulsations occur. Moreover condensation and corrosive atmospheres which could damage the internal

1.36.1 - Standard Model

Design: EN 837-1, ISO 15156-3.
Safety designation: S1 as per EN 837-2.
Ranges: *from 0...15 to 0…10000 psi* (from 0...1 to 0...600 bar or equivalent units).
Accuracy class: 1 as per EN 837-1.
Ambient temperature:
-40...+149 °F (-40...+65 °C), IP55 housing (EN 60529/IEC 529);
-58...+149 °F (-50...+65 °C), vented IP67 housing
(EN 60529/IEC 529).
Process fluid temperature: *-40...+302 °F* (-40...+150 °C).
Thermal drift: ±0,4 %/10 °C of range (starting from *68°F* - 20°C).
Working pressure:
100% of FSV for static pressure;
90% of FSV for pulsating pressure.
Over pressure limit: 30% of FSV (max 12 hours).
Socket material: AISI 316L st.st. or Monel 400.
Bourdon tube: Monel 400 seamless tube.
Leak test: Helium Test leak Search (max $1x10^{-6}$ mbar x l x s^{-1})
Case: stainless steel.
Ring: stainless steel, bayonet lock.
Window: tempered glass (with external zero adjustement on request).
Movement: stainless steel with internal limit stops.
Dial: aluminium, white with black markings.
Pointer: adjustable, aluminium, black.

1.36.2 - Fillable Model

Ambient temperature: *-40...+149 °F* (-40...+65 °C), IP 67 housing (EN 60529/IEC 529).
Other features: as Standard Model.

1.36.3 - Filled Model

Damping liquid: glycerine 98% or silicon oil.
Ambient temperature:
+32...+149 °F (0...+65 °C) with glycerine filling;
-4...+149 °F (-20...+65 °C) with glycerine filling mixture;
-40...+149 °F (-40...+65 °C) with silicon oil fluid filling.
Process fluid temperature: max *+149°F* (+65 °C).
Protection degree: IP 67 as per EN 60529/IEC 529.
Other features: as Standard Model.

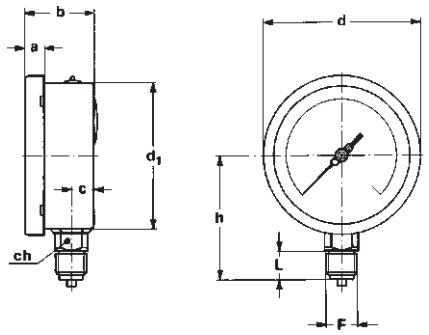

A - LOWER CONNECTION

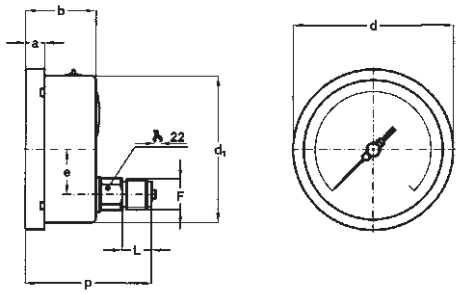

D - BACK CONNECTION

Mounting	DS	F	a	b	c	d	d1	e	h	p	L	Weight (1)
Lower	E 4" (100)	41M - G 1/2 A 43M - 1/2-14 NPT	0.51" (13)	1.90" (48,5)	0.59" (15)	4.35" (110,6)	3.97" (101)		3.38" (86)		0.78" (20)	1.16 lbs (0,53 kg)
	G 6" (150)	41M - G 1/2 A 43M - 1/2-14 NPT	0.59" (15)	1.98" (50,5)	0.61" (15,5)	6.33" (161)	5.88" (149,6)		4.60" (117)		0.78" (20)	2.24 lbs (1,02 kg)
Back	E 4" (100)	41M - G 1/2 A 43M - 1/2-14 NPT	0.51" (13)	1.90" (48,5)		4.35" (110,6)	3.97" (101)	1.22" (31)		3.42" (87)	0.78" (20)	1.14 lbs (0,52 kg)
	G 6" (150)	41M - G 1/2 A 43M - 1/2-14 NPT	0.59" (15)	1.98" (50,5)		6.33" (161)	5.88" (149,6)	1.22" (31)		3.36" (85,5)	0.78" (20)	2.09 lbs (0,95 kg)

dimensions : *inches* (mm)

(1) add 0.72 lbs (0,33 kg) for DS 4" (100) and 1.65 lbs (0,78 kg) for DS 6" (150), when filled

OPTIONS

Model	standard	fillable	filled
B - "U"-clamp, for back connection pressure gauges	◆	◆	◆
C - Back flange, for lower connection pressure gauges	◆	◆	◆
E - Front flange, for back connection pressure gauges	◆	◆	◆
2G1 - ATEX II 2G c version	*See the ATEX pressure gauges data-sheet for technical details*		
2D1 - ATEX II 2GD c version			
C40 - AISI 316L st. st. case and ring	◆	◆	◆
E07 - Socket material MONEL 400	◆	◆	◆
E30 - NACE MR0103/MR0175 -ISO15156-3 certificate	◆	◆	◆
P01 - Suitable for filling with silicone		◆	
G11 - Glycerine filling mixture, DS 4" (100 mm)			◆
ECV- Vented housing version, Ambient temperature -50...+65 °C (1) (2)	◆		
E67 - Protection degree IP67 (3)	◆		
S10 - Silicone filling			◆
T01 - Tropicalization	◆	◆	◆
T32 - Safety glass window	◆	◆	◆

(1) to be ordered with E67 option
(2) not adjustable pointer
(3) to be ordered with ECV option

"HOW TO ORDER" SEQUENCE

Section / Model / Case / Mounting / Diameter / Special version /Range / Process connection / Options

1	36	1	A	E	---	41M	B...E
		2	D	G	E07	43M	2G1...T32
		3					

Copyright © Nuova Fima srl. All rights reserved. Any part of this publication should not be reproduced without a written Nuova Fima's srl approval

NUOVA FIMA USA Inc.
www.nuovafima.com - e-mail: infousa@nuovafima.com
4123 Hollister, Suite G - TX 77080 Houston
TEL. +1 713.690.9800 - FAX +1 713.690.9803

NUOVA FIMA srl
www.nuovafima.com - e-mail: info@nuovafima.com
P.O. BOX 58 - VIA C. BATTISTI 59 - 28045 INVORIO (NO) ITALY
TEL. +39 0322 253200 - FAX +39 0322 253232

IN ORDER TO IMPROVE THEIR PRODUCTION, MESSRS. NUOVA FIMA RESERVE THE RIGHT TO THEMSELVES TO MAKE ALL THE MODIFICATIONS THAT THEY DEEM INDISPENSABLE AT ANY TIME. UPDATED DATA-SHEETS ARE AVAILABLE ON SITE: www.nuovafima.com

MGS40

bourdon tube "solid-front" pressure gauges
NACE MR0103/MR0175 - ISO 15156-3 version
DS 4", 6" (100-150mm)

PED 2014/68/UE ATEX 2014/34/UE

These instruments are built in conformity with the construction and safety specifications of EN 837-1/S3 e ASME B40.1. In case of leaks or break of the elastic element, the operator is protected by a solid separating wall placed on the front of the instrument and by the blow out back. They are usually used in the petrochemical and natural gas industry; they are built to resist to the most severe conditions created by H2S, by the environment and for those fluids, which have high viscosity and do not crystallize. The TIG welding between the case and the process socket, strengthens the instrument and assures a better tight in case of dampening fluid The advantages of filling the case of the instrument with a dampening fluid are: reduced pointer fluctuation, reduced wear of rotating parts of the movement when pulsant vibrations and pulsations occur. Moreover condensation and corrosive atmospheres which could damage the internal parts.

1.40.1 - Standard Model

Design: EN 837-1, ISO 15156-3.
Safety designation: S3 as per EN 837-2.
Ranges: *from 0...15 to 0...10000 psi* ; (from 0...1 to 0...600 bar or other equivalent units).
Accuracy class: 1 as per EN 837-1.
Ambient temperature:
-40...+149 °F (-40...+65 °C), IP55 housing (EN 60529/IEC 529);
-58...+149 °F (-50...+65 °C), vented IP67 housing
(EN 60529/IEC 529).
Process fluid temperature: *-40...+302°F* (-40...+150 °C).
Thermal drift: ±0,4 %/10 °C of range (starting from *68°F* - 20°C).
Working pressure:
100% of FSV for static pressure;
90% of FSV for pulsating pressure.
Overpressure: 30% of FSV (max 12 h).
Socket material: AISI 316L or MONEL 400.
Bourdon tube: MONEL 400 seamless tube
Leak test: Helium Test leak search, (max $1x10^{-6}$ mbar x l x s^{-1}).
Case: stainless steel
Ring: stainless steel, bayonet lock.
Blow out disk: stainless steel.
Window: safety glass (with external zero adjustement on request).
Movement: stainless steel with internal limit stops.
Dial: aluminium, white with black markings.
Pointer: adjustable, aluminium, black.

1.40.2 - Fillable Model - Lower connection only

Ambient temperature: *-40...+149 °F* (-40...+65 °C), IP 67 housing (EN 60529/IEC 529).
Other features: as Standard Model.

1.40.3 - Filled Model - Lower connection only

Filling liquid: glycerina 98%, silicon oil or Fluorinated fluid.
Ambient temperature:
+32...+149°F (0...+65 °C) with glycerine filling;
-40...+149°F (-40...+65 °C) with silicon oil filling or fluorinated fluid filling.
Process fluid temperature: *+149°F* (+65 °C).
Protection degree: IP 67 as per EN 60529/IEC 529.
Other features:as Standard Model

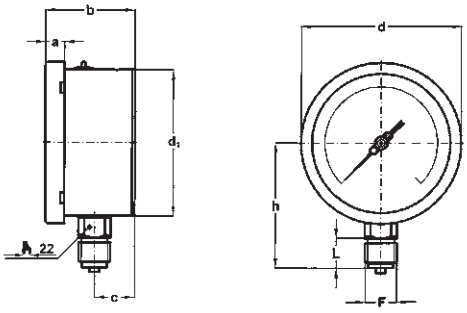

A - LOWER CONNECTION

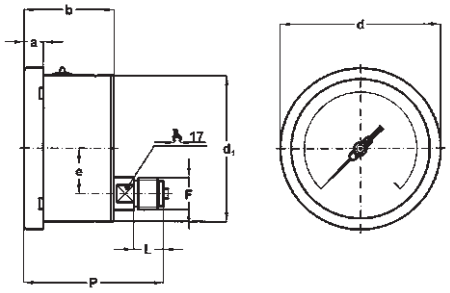

D - BACK CONNECTION,
Standard model only

Mounting	DS	F	a	b	c	d	d_1	e	h	p	L	Weight (1)
Lower	E 4" (100)	41M - G 1/2 A 43M - 1/2-14 NPT	0.51" (13)	2.46" (62,5)	1.16" (29,5)	4.35" (110,6)	3.97" (101)		3.38" (86)		0.78" (20)	1.43 lbs (1) (0,65 kg)
	G 6" (150)	41M - G 1/2 A 43M - 1/2-14 NPT	0.59" (15)	2.51" (64)	1.18" (30)	6.33" (161)	5.92" (150,5)		4.60" (117)		0.78" (20)	2.64 lbs (1) (1,2 kg)
Back	E 4" (100)	41M - G 1/2 A 43M - 1/2-14 NPT	0.51" (13)	2.46" (62,5)		4.35" (110,6)	3.97" (101)	1.22" (31)		3.75" (95,5)	0.78" (20)	1.54 lbs (0,70 kg)
	G 6" (150)	41M - G 1/2 A 43M - 1/2-14 NPT	0.59" (13)	2.51" (64)		6.33" (161)	5.92" (150,5)	1.22" (31)		3.77" (96)	0.78" (20)	2.53 lbs (1,15 kg)

dimensions : *inches* (mm)

(1) add 0.73 lbs (0,33 kg) for DS 4" (100) and 1.76 lbs (0,8 kg) for DS 6" (150), when filled

OPTIONS

Model	standard	fillable	filled
C - Back flange, for lower connection pressure gauges	◆	◆	◆
E - Front flange, for back connection pressure gauges	◆		
2G1 - ATEX II 2G c version	*See the ATEX pressure gauges data-sheet for technical details*		
2D1 - ATEX II 2GD c version			
C40 - AISI 316L st. st. case, ring and blow out disk	◆	◆	◆
E07 - Socket material MONEL 400	◆	◆	◆
E30 - NACE MR0103/MR0175 - ISO 15156-3 certificate	◆	◆	◆
F30 - Fluorinated fluid filling			◆
P01 - Suitable for filling with silicone/Fluorinated fluid		◆	
P03 - Compensating device, for DS 4" (100 mm) and lower mounting only	◆	◆	◆
S10 - Silicone filling			◆
ECV - Vented housing version, Ambient temperature -50...+65 °C (1) (2)	◆		
E67 - Protection degree IP67 (3)	◆		
T01 - Tropicalization	◆	◆	◆

(1) to be ordered with E67 option
(2) lower mounting and not adjustable pointer
(3) to be ordered with ECV option

"HOW TO ORDER" SEQUENCE

Section / Model / Case / Mounting / Diameter / Special version /Range / Process connection / Options

1	40	1	A	E	--	41M	C...E
		2	D	G	E07	43M	2G1...T01
		3					

Copyright © Nuova Fima srl. All rights reserved. Any part of this publication should not be reproduced without a written Nuova Fima's srl approval

IN ORDER TO IMPROVE THEIR PRODUCTION, MESSRS. NUOVA FIMA RESERVE THE RIGHT TO THEMSELVES TO MAKE ALL THE MODIFICATIONS THAT THEY DEEM INDISPENSABLE AT ANY TIME. UPDATED DATA-SHEETS ARE AVAILABLE ON SITE: www.nuovafima.com

NUOVA FIMA USA Inc.
www.nuovafima.com - e-mail: infousa@nuovafima.com
4123 Hollister, Suite G - TX 77080 Houston
TEL. +1 713.690.9800 - FAX +1 713.690.9803

NUOVA FIMA srl
www.nuovafima.com - e-mail: info@nuovafima.com
P.O. BOX 58 - VIA C. BATTISTI 59 - 28045 INVORIO (NO) ITALY
TEL. +39 0322 253200 - FAX +39 0322 253232

MGS60

bourdon tube "solid-front" pressure gauges NACE MR0103/MR0175 -ISO 15156-3 version turret case - DS 4.5" (125mm)

These instruments are built in conformity with the construction and safety specifications of **ASME B40.1**.
In case of leaks or break of the elastic element the operator is protected by a stainless steel safety cell solid front and by the blow-out back. They are usually used in the petrochemical industry. They are built to resist to the most severe conditions created by H_2S, by the environment and for those fluids which have high viscosity and do not crystallize. The TIG welding between the safety cell and the process socket strengthens the instrument and assures a better tight in case of dampening fluid The advantages of filling the case of the instrument with a dampening fluid are: reduced pointer fluctuation, reduced wear of rotating parts of the movement when pulsant vibrations and pulsations occur. Moreover condensation and corrosive atmospheres which could damage the internal parts.

1.60.2 - Fillable Model - Lower connection only

Design: ASME B40.1, ISO 15156-3.
Ranges: *from 0...15 to 0...10000 psi* (from 0...1 to 0...600 bar or equivalent units).
Accuracy: 1A Grade as per ASME B40.1 (±1 % of FSV.).
Ambient temperature: *-22...+149°F* (-30...+65°C).
Process fluid temperature: *-22...+302°F* (-30...+150°C max).
Thermal drift: ±0,4 %/10 K of range (starting from *68°F* - 20°C).
Working pressure:
100% of FSV for static pressure;
90% of FSV for pulsating pressure.
Overpressure limit: 30% of FSV (max 12 h).
Protection degree: IP 65 as per EN 60529/IEC 529.
Socket material: AISI 316L st.st. or MONEL 400
Bourdon tube MONEL 400 seamless tube.
Leak test: Helium Test leak search
(max $1x10^{-6}$ mbar x l x s^{-1}).
Case and blow out disk: strengthened polyammides, fiber glass, UV rays stabilized.
Ring: strengthened polypropylene fiber glass.
Safety cell: stainless steel.
Window: tempered glass.
Movement: stainless steel with internal limit stops for minimum and maximum pressure.
Dial: aluminium, white with black markings.
Pointer: adjustable, aluminium, black.

1.60.3 - Filled Model - Lower connection only

Filling liquid: glycerine 98%, silicon oil or Fluorinated fluid.
Ambient temperature:
+32...149°F (0...+65 °C) with glycerine filling;
-22...+149° F (-30...+65 °C) with silicon oil filling;
-22...+149°F (-30...+65 °C) with fluorinated fluid filling.
Fluid process temperature: *+149°F* (+65 °C).
Protection degree: IP 67 as per EN 60529/IEC 529.
Compensating device: gum.
Other features: as fillable model.

1.60.1 - Standard Model - Back connection only

Protection degree: IP 55 as per EN 60529/IEC 529.
Case: phenolic resin.
Ring and blow out disk: strengthened polyammides, fiber glass.
Safety cell: not available.
Separating wall: phenolic resin.
Other features: as fillable model.

bourdon tube "solid-front" pressure gauges NACE MR0103/MR0175 - ISO 15156-3 version, turret case DS 4.5" (125mm)

MGS60

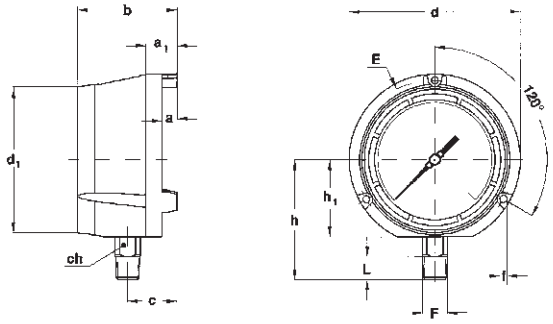

A - LOWER CONNECTION

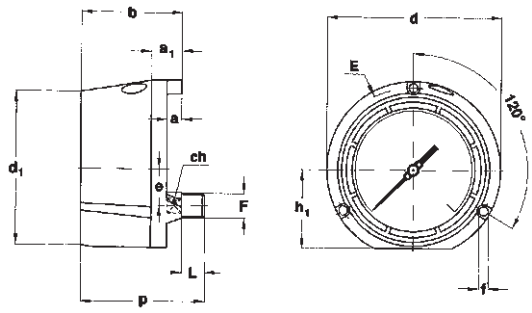

D - BACK CONNECTION, FOR STANDARD MODEL ONLY

Mounting	F	a	a_1	b	c	d	d_1	e	E	f	h	h_1	p	ch	L	Weight (1)
Lower	**43M** 1/2-14 NPT	*0.51"* (13)	*1.06"* (27)	*3.38"* (86)	*1.65"* (42)	*5.82"* (148)	*4.96"* (126)		*5.39"* (137)	*0.25"* (6,5)	*4.07"* (103,5)	*2.61"* (66,5)		*0.86"* (22)	*0.78"* (20)	*1.78 lbs* (0,81 kg)
Back	**43M** 1/2-14 NPT	*0.51"* (13)	*1.06"* (27)	*3.38"* (86)		*5.82"* (148)	*5.07"* (129)	*1.22"* (31)	*5.39"* (137)	*0.23"* (6)	*4.07"* (103,5)	*2.61"* (66,5)	*4.17"* (106)	*0.66"* (17)	*0.78"* (20)	*1.78 lbs* (0,81 kg)

dimensions : *inches* (mm)

(1) add *1.10 lbs* (0,5 kg) when filled

OPTIONS

Model	standard	fillable	filled
E07 - Socket material MONEL 400	◆	◆	◆
E30 - NACE MR0103/MR0175 - ISO 15156-3 certificate	◆	◆	◆
F11 - Panel mounting kit	◆	◆	◆
F30 - Fluorinated fluid filling			◆
P01 - Suitable for filling with silicone/fluid filling		◆	
P03 - Blow out disk with compensating device		◆	
S10 - Silicone filling			◆
T01 - Tropicalization	◆	◆	◆
T32 - Safety glass window	◆	◆	◆

"HOW TO ORDER" SEQUENCE

Section / Model / Case / Mounting / Diameter / Special version /Range / Process connection / Options

1	**60**	**1**	**A**	**F**	**---**	**41M**	**E30...T32**
		2	**D**		**E07**		
		3					

Copyright © Nuova Fima S.r.l. All rights reserved. Any part of this publication should not be reproduced without a written Nuova Fima's S.p.A. approval

IN ORDER TO IMPROVE THEIR PRODUCTION, MESSRS. NUOVA FIMA RESERVE THE RIGHT TO THEMSELVES TO MAKE ALL THE MODIFICATIONS THAT THEY DEEM INDISPENSABLE AT ANY TIME. UPDATED DATA-SHEETS ARE AVAILABLE ON SITE: www.nuovafima.com

NUOVA FIMA USA Inc.
www.nuovafima.com - e-mail: infousa@nuovafima.com
4123 Hollister, Suite G - TX 77080 Houston
TEL. +1 713.690.9800 - FAX +1 713.690.9803

NUOVA FIMA srl
www.nuovafima.com - e-mail: info@nuovafima.com
P.O. BOX 58 - VIA C. BATTISTI 59 - 28045 INVORIO (NO) ITALY
TEL. +39 0322 253200 - FAX +39 0322 253232

MGS37

bourdon tube pressure gauges
NACE MR0175/ISO15156-3 version
DS 4", 6" (100-150mm)

PED 2014/68/UE ATEX 2014/34/UE

These instruments are designed for petrochemical industry. They are built to resist to the most severe conditions created by H_2S and by the environment. The quality of the materials used to build the sensible element allows their use with high frequency pulsating pressures. The TIG welding between the case and the process socket, strengthens the instrument and assures a better tight in case of dampening fluid. The advantages of filling the case of the instrument with a dampening fluid are: reduced pointer fluctuation, reduced wear of rotating parts of the movement when pulsant vibrations and pulsations occur. Moreover condensation and corrosive atmospheres which could damage the internal

1.37.1 - Standard Model

Design: EN 837-1.
Safety designation: S1 as per EN 837-2.
Ranges: *from -30...0 INHG to 0…6000 psi*
(from -1...0 to 0...400 bar or equivalent units).
Accuracy class: 1 as per EN 837-1.
Ambient temperature: *-13...+149 °F* (-25...+65 °C).
Process fluid temperature: *-40...+212 °F* (-40...+100 °C).
Working pressure:
100% of FSV for static pressure;
90% of FSV for pulsating pressure.
Over pressure limit:
30% of FSV, max *6500 psi* - 450 bar (max 12 hours).
Special overpressure (upon request):
1000 psi (60 bar) for pressure > *15 psi* (1 bar) ... ≤ *150 psi* (10 bar);
3500 psi (250 bar) for pressure > *150 psi* (10 bar) ... ≤ *1500 psi* (100 bar);
6500 psi (450 bar) for pressure > *1500 psi* (100 bar) ... ≤ *6000 psi* (400 bar).
Protection degree: IP 55 as per EN 60529/IEC 529.
Bourdon tube: AISI 316L st.st.
Diaphragm seal filling fluid: silicone oil.
Wetted parts: Hastelloy C276.
Leak test: Helium Test leak Search (max $1x10^{-6}$ mbar x l x s^{-1})
Case: stainless steel.
Ring: stainless steel, bayonet lock.
Window: tempered glass.
Movement: stainless steel with internal limit stops for minimum and maximum pressure.
Dial: aluminium, white with black markings.
Pointer: adjustable, aluminium, black.

1.37.2 - Fillable Model

Protection degree: IP 67 as per EN 60529/IEC 529.
Other features: as Standard Model.

1.37.3 - Filled Model

Pressure gauges damping liquid:
glycerine 98%, silicon oil or fluorinated fluid.
Ambient temperature:
+32...+149 °F (0...+65 °C) with glycerine filling;
-40...+149 °F (-40...+65 °C) with silicon oil filling;
-40...+149 °F (-40...+65 °C) with fluorinated fluid filling.
Process fluid temperature: max *+212°F* (+100 °C).
Protection degree: IP 67 as per EN 60529/IEC 529.
Other features: as Standard Model.

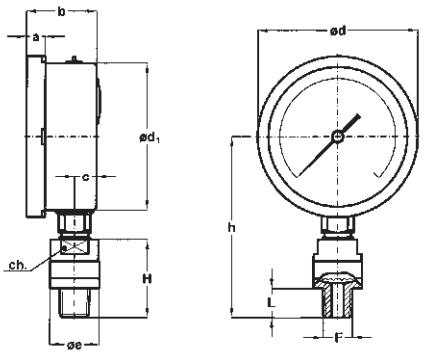

A - LOWER CONNECTION

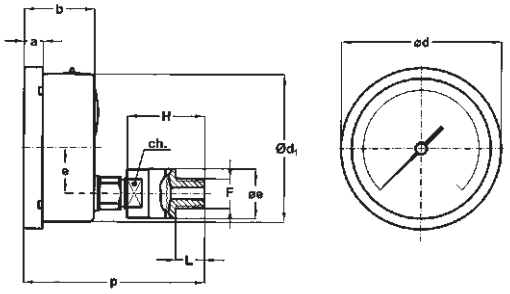

D - BACK CONNECTION

DS	Ranges	F	a	b	c	ø d	ø d 1	e	øe	h	H	L	p	ch	Weigth (1)
E 4" (100)	≤ 160 psi (≤ 10 bar)	43M 1/2-14 NPT	0.51" (13)	1.91" (48,5)	0.59" (15)	4.35" (110,6)	3.97" (101)	1.22" (31)	2.24" (57)	4.86" (123,5)	2.12" (54)	0.78" (20)	4.94" (125,5)	1.06" (27)	2.18 lbs (0,99 kg)
	> 160 psi (> 10 bar)								1.34" (34)						
G 6" (150)	≤ 160 psi (≤ 10 bar)	43M 1/2-14 NPT	0.59" (15)	1.99" (50,5)	0.61" (15,5)	6.33" (161)	5.88" (149,6)	1.22" (31)	2.24" (57)	6.12" (155,5)			4.88" (124)		3.26 lbs (1,48 kg)
	> 160 psi (> 10 bar)								1.34" (34)						

dimensions : mm

(1) add 0.72 lbs (0,33 kg) for DS 4" (100) and 1.65 lbs (0,75 kg) for DS 6" (150), when filled

OPTIONS

Model	standard	fillable	filled
E - Front flange, for back connection pressure gauges	◆	◆	◆
2G1 - ATEX II 2G c version	*See the ATEX pressure gauges data-.sheet for technical details*		
2D1 - ATEX II 2GD c version			
C40 - AISI 316L case and ring	◆	◆	◆
E75 - NACE MR0175/ISO 15156-3 certificate	◆	◆	◆
P02 - Oxygen service	◆	◆ (1)	◆(2)
P01 - Suitable for filling with silicone / fluorinated fluid		◆	
S10 - Silicone filling			◆
F30 - Fluorinated fluid filling			◆
SPS - Special overpressure	◆	◆	◆
T01 - Tropicalization	◆	◆	◆
T32 - Safety glass window	◆	◆	◆

(1) to be ordered with instruments suitable for fluorinated fluid filling

(2) to be ordered with fluorinated fluid filled instruments

"HOW TO ORDER" SEQUENCE

Section / Model / Case / Mounting / Diameter / Range / Process connection / Options

1	37	1	A	E	43M	E
		2	D	G		2G1...2D1
		3				C40...T32

Copyright © Nuova Fima srl. All rights reserved. Any part of this publication should not be reproduced without a written Nuova Fima's srl approval

IN ORDER TO IMPROVE THEIR PRODUCTION, MESSRS. NUOVA FIMA RESERVE THE RIGHT TO THEMSELVES TO MAKE ALL THE MODIFICATIONS THAT THEY DEEM INDISPENSABLE AT ANY TIME. UPDATED DATA-SHEETS ARE AVAILABLE ON SITE: www.nuovafima.com

NUOVA FIMA USA Inc.
www.nuovafima.com - e-mail: infousa@nuovafima.com
4123 Hollister, Suite G - TX 77080 Houston
TEL. +1 713.690.9800 - FAX +1 713.690.9803

NUOVA FIMA srl
www.nuovafima.com - e-mail: info@nuovafima.com
P.O. BOX 58 - VIA C. BATTISTI 59 - 28045 INVORIO (NO) ITALY
TEL. +39 0322 253200 - FAX +39 0322 253232

MGS41

bourdon tube "solid-front" pressure gauges
NACE MR0175/ISO 15156-3 version
DS 4", 6" (100-150mm)

PED 2014/68/UE ATEX 2014/34/UE

These instruments are built in conformity with the construction and safety specifications of EN 837-1/S3 e ASME B40.1. In case of leaks or break of the elastic element, the operator is protected by a solid separating wall placed on the front of the instrument and by the blow out back. They are usually used in the petrochemical industry; they are built to resist to the most severe conditions created by H2S and by the environment. The TIG welding between the case and the process socket, strengthens the instrument and assures a better tight in case of dampening fluid The advantages of filling the case of the instrument with a dampening fluid are: reduced pointer fluctuation, reduced wear of rotating parts of the movement when pulsant vibrations and pulsations occur. Moreover condensation and corrosive atmospheres which could damage the internal parts.

1.41.1 - Standard Model

Design: EN 837-1.
Safety designation: S1 as per EN 837-2.
Ranges: *from -30...0 INHG to 0…6000 psi* (from -1...0 to 0...400 bar or equivalent units).
Accuracy class: 1 as per EN 837-1.
Ambient temperature: *-13...+149 °F* (-25...+65 °C).
Process fluid temperature: *-40...+212 °F* (-40...+100 °C).
Working pressure:
100% of FSV for static pressure;
90% of FSV for pulsating pressure.
Over pressure limit:
30% of FSV, max *6500 psi* - 450 bar (max 12 hours).
Special overpressure (upon request):
1000 psi (60 bar) for pressure > *15 psi* (1 bar) ... ≤ *150 psi* (10 bar);
3500 psi (250 bar) for pressure > *150 psi* (10 bar) ... ≤ *1500 psi* (100 bar);
6500 psi (450 bar) for pressure > *1500 psi* (100 bar) ... ≤ *6000 psi* (400 bar).
Protection degree: IP 55 as per EN 60529/IEC 529.
Bourdon tube: AISI 316L st.st.
Diaphragm seal filling fluid: silicone oil.
Wetted parts: Hastelloy C276.
Leak test: Helium Test leak Search (max $1x10^{-6}$ mbar x l x s^{-1})
Case: stainless steel.
Ring: stainless steel, bayonet lock.
Blow out disk: stainless steel.
Window: safety glass.
Movement: stainless steel with internal limit stops for minimum and maximum pressure.
Dial: aluminium, white with black markings.
Pointer: adjustable, aluminium, black.

1.41.2 - Fillable Model

Protection degree: IP 67 as per EN 60529/IEC 529.
Other features: as Standard Model.

1.41.3 - Filled Model

Pressure gauges damping liquid:
glycerine 98%, silicon oil or fluorinated fluid.
Ambient temperature:
+32...+149 °F (0...+65 °C) with glycerine filling;
-40...+149 °F (-40...+65 °C) with silicon oil filling;
-40...+149 °F (-40...+65 °C) with fluorinated fluid filling.
Process fluid temperature: max *+212°F* (+100 °C).
Protection degree: IP 67 as per EN 60529/IEC 529.
Other features: as Standard Model.

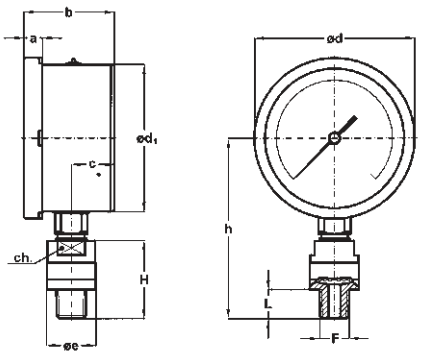

A - LOWER CONNECTION

DS	Ranges	F	a	b	c	ø d	ø d_1	øe	h	H	L	ch	Weight (1)
E 4" (100)	≤ *160 psi* (10 bar)	43M 1/2-14 NPT	*0.51"* (13)	*2.46"* (62,5)	*1.16"* (29,5)	*4.35"* (110,6)	*3.97"* (101)	*2.24"* (57)	*4.86"* (123,5)	*2.12"* (54)	*0.78"* (20)	*1.06"* (27)	*2.44 lbs* (1,11 kg)
	> *160 psi* (10 bar)							*1.33"* (34)					
G 6" (150)	≤ *160 psi* (10 bar)	43M 1/2-14 NPT	*0.59"* (15)	*2.52"* (64)	*1.18"* (30)	*6.33"* (161)	*5.88"* (149,6)	*2.24"* (57)	*6.12"* (155,5)				*3.65 lbs* (1,66 kg)
	> *160 psi* (10 bar)							*1.33"* (34)					

dimensions : *inches* (mm)

(1) add 0.72 lbs (0,33 kg) for DS 4" (100) and 1.65 lbs (0,75 kg) for DS 6" (150), when filled

OPTIONS

Model	standard	fillable	filled
2G1 - ATEX II 2G c version	*See the ATEX pressure gauges data-.sheet for technical details*		
2D1 - ATEX II 2GD c version			
C40 - AISI 316L st. st. case and ring	◆	◆	◆
E75 - NACE MR0175/ISO 15156-3 certificate	◆	◆	◆
P02 - Oxygen service	◆	◆ (1)	◆ (2)
P01 - Suitable for filling with silicone and fluorinated fluid		◆	
S10 - Silicone filling			◆
F30 - Fluorinated fluid filling			◆
SPS - Special overpressure	◆	◆	◆
T01 - Tropicalization	◆	◆	◆

(1) to be ordered with instruments suitable for fluorinated fluid filling

(2) to be ordered with fluorinated fluid filled instruments

"HOW TO ORDER" SEQUENCE

Section / Model / Case / Mounting / Diameter / Range / Process connection / Options

1	**41**	**1**	**A**	**E**	**43M**	**2G1...2D1**
		2		**G**		**C40...T01**
		3				

Copyright © Nuova Fima srl. All rights reserved. Any part of this publication should not be reproduced without a written Nuova Fima's srl approval

IN ORDER TO IMPROVE THEIR PRODUCTION, MESSRS. NUOVA FIMA RESERVE THE RIGHT TO THEMSELVES TO MAKE ALL THE MODIFICATIONS THAT THEY DEEM INDISPENSABLE AT ANY TIME. UPDATED DATA-SHEETS ARE AVAILABLE ON SITE: www.nuovafima.com

NUOVA FIMA USA Inc.
www.nuovafima.com - e-mail: infousa@nuovafima.com
4123 Hollister, Suite G - TX 77080 Houston
TEL. +1 713.690.9800 - FAX +1 713.690.9803

NUOVA FIMA srl
www.nuovafima.com - e-mail: info@nuovafima.com
P.O. BOX 58 - VIA C. BATTISTI 59 - 28045 INVORIO (NO) ITALY
TEL. +39 0322 253200 - FAX +39 0322 253232

MGS61

bourdon tube "solid-front" pressure gauges
NACE MR0175/ISO 15156-3 version
turret case - DS 4.5" (125mm)

PED 2014/68/UE

In case of leaks or break of the elastic element the operator is protected by a stainless steel safety cell solid front and by the blow-out back.They are usually used in the petrochemical industry; they are built to resist to the most severe conditions created by H2S and by the environment and for those fluids. The TIG welding between the safety cell and the process socket strengthens the instrument. The advantages of filling the case of the instrument with a dampening fluid are: reduced pointer fluctuation, reduced wear of rotating parts of the movement when pulsant vibrations and pulsations occur. Moreover condensation and corrosive atmospheres which could damage the internal parts.

1.61.2 - Fillable Model

Design: ASME B40.1
Ranges: *from -30...0 INHG to 0…6000 psi* (from -1...0 to 0...400 bar or equivalent units).
Accuracy: Grade 1A as per ASME B40.1 (±1,0% of span).
Ambient temperature: *-13...+149 °F* (-25...+65 °C).
Process fluid temperature: *-40...+212 °F* (-40...+100 °C).
Working pressure:
100% of FSV for static pressure;
90% of FSV for pulsating pressure.
Over pressure limit:
30% of FSV, max *6500 psi* - 450 bar (max 12 hours).
Special overpresure (upon request):
1000 psi (60 bar) for pressure > *15 psi* (1 bar) ... ≤ *150 psi* (10 bar);
3500 psi (250 bar) for pressure > *150 psi* (10 bar) ... ≤ *1500 psi* (100 bar);
6500 psi (450 bar) for pressure > *1500 psi* (10 bar) ... ≤ *6000 psi* (400 bar).
Protection degree: IP 65 as per EN 60529/IEC 529.
Bourdon tube: AISI 316L st.st.
Diaphragm seal filling fluid: silicone oil.
Wetted parts: Hastelloy C276.
Leak test: Helium Test leak Search (max $1x10^{-6}$ mbar x l x s^{-1})
Case and blow out disk: strengthened polyammides with fiber glass , UV rays stabilized.
Ring: strengthened polypropylene, fiber glass.
Safety cell: stainless steel.
Window: tempered glass.
Movement: stainless steel with internal limit stops for minimum and maximum pressure.
Dial: aluminium, white with black markings.
Pointer: adjustable, aluminium, black.

1.61.3 - Filled Model

Pressure gauges damping liquid:
glycerine 98%, silicon oil or fluorinated fluid.
Ambient temperature:
+32...+149 °F (0...+65 °C) with glycerine filling;
-40...+149 °F (-40...+65 °C) with silicon oil filling;
-40...+149 °F (-40...+65 °C) with fluorinated fluid filling.
Process fluid temperature: max *+212°F* (+100 °C).
Protection degree: IP 67 as per EN 60529/IEC 529.
Compensating device: gum.
Other features: as Fillable Model.

bourdon tube "solid-front" pressure gauges
NACE MR0175/ISO 15156-3 version,
turret case DS 4.5" (125mm)

MGS61

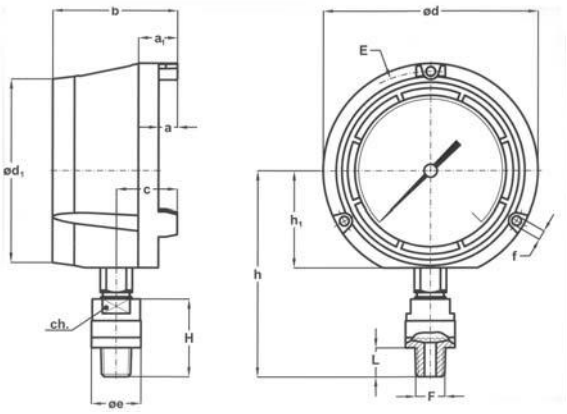

A - LOWER CONNECTION

Ranges	F	a	a_1	b	c	ø d	ø d_1	øe	E	f	h	h_1	H	L	ch	Weight (1)
≤ 160 psi (10 bar)	**43M** 1/2-14 NPT	*0.51"* (13)	*1.06"* (27)	*3.38"* (86)	*1.65"* (42)	*5.82"* (148)	*4.96"* (126)	*2.24"* (57)	*5.39"* (137)	*0.25"* (6,5)	*5.57"* (141,5)	*2.61"* (66,5)	*2.12"* (54)	*0.78"* (20)	*1.06"* (27)	*2.44 lbs* (1,11 kg)
> 160 psi (10 bar)								*1.33"* (34)								

dimensions : *inches* (mm)

(1) add 1.10 lbs (0,5 kg), when filled

OPTIONS

Model	fillable	filled
E75 - NACE MR0175/ISO 15156-3 certificate	◆	◆
P02 - Oxygen service	◆ (1)	◆ (2)
P01 - Suitable for filling with silicone / fluorinated fluid	◆	
S10 - Silicone filling		◆
F30 - Fluorinated fluid filling		◆
SPS - Special overpressure	◆	◆
T01 - Tropicalization	◆	◆
T32 - Safety glass window	◆	◆

(1) to be ordered with instruments suitable for fluorinated fluid filling

(2) to be ordered with fluorinated fluid filled instruments

"HOW TO ORDER" SEQUENCE

Section / Model / Case / Mounting / Diameter /Range / Process connection / Options

1	61	2	A	F	43M	E75...T32
		3				

Copyright © Nuova Fima srl. All rights reserved. Any part of this publication should not be reproduced without a written Nuova Fima's srl approval

IN ORDER TO IMPROVE THEIR PRODUCTION, MESSRS. NUOVA FIMA RESERVE THE RIGHT TO THEMSELVES TO MAKE ALL THE MODIFICATIONS THAT THEY DEEM INDISPENSABLE AT ANY TIME. UPDATED DATA SHEETS ARE AVAILABLE ON SITE: www.nuovafima.com

NUOVA FIMA USA Inc.
www.nuovafima.com - e-mail: infousa@nuovafima.com
4123 Hollister, Suite G - TX 77080 Houston
TEL. +1 713.690.9800 - FAX +1 713.690.9803

NUOVA FIMA srl
www.nuovafima.com - e-mail: info@nuovafima.com
P.O. BOX 58 - VIA C. BATTISTI 59 - 28045 INVORIO (NO) ITALY
TEL. +39 0322 253200 - FAX +39 0322 253232

homogenizer gauges
DS 4" (100mm)

PED 2014/68/EU

74-06
Autorization NO. 1599

These instruments are designed for homogenizer machines and are built according to standard n. 74-06 of 3-A organization (Sanitary Standards Symbol Administrative Council). The absence of interstices and the mirror finishing of the components assure the best hygiene. The process connection is a special diaphragm seal integrally built with the pressure gauge. To reduce the effects of severe operating conditions like vibrations and pulsations, the instruments can be liquid filled. These types of sensors are intended for Manual (COP) Cleaning.

1.OM.2 - Fillable model

Design: 74-06 SSI; EN837-1.
Safety designation: S1 as per EN 837-2.
Ranges: *from 0...2000 psi to 0...15000 psi*; (from 0...160 bar to 0...1600 bar or equivalent units).
Accuracy: class 1,6 as per EN 837-1.
Ambient temperature: *-13...+149 °F* (-25...+65 °C).
Process temperature: *-4...+248 °F* (-20...+120 °C).
Max *302°F* (150 °C) for 1 hour during sterilization (S.I.P)[1].
Working pressure (referred to the full scale value)**:** max 75%.
Over pressure limit: not available.
Seal fill: oil for food service (FDA).
Protection degree: IP 67 as per EN 60529/IEC 529.
Process connection: AISI 316L st.st. with finishing Ra ≤0,8 µm (welded parts included).
Diaphragm: AISI 316L
Welding: AISI 316L TIG.
Flange and screw nut: AISI 316 st.st.
Case: stainless steel.
Ring: stainless steel, bayonet lock.
Elastic element: AISI 316L st.st. spiral form.
Window: tempered glass.
Movement: stainless steel.
Dial: aluminium, white with black markings.
Pointer: aluminium black anodized.

1.OM.3 - Filled model

Case filling liquid: glycerine 99,5% (USP, E.P. and F.U.) for food service.
Ambient temperature: *+59...+149 °F* (+15...+65 °C).
Other features: as fillable model.

1) S.I.P. = Steamed In Place

RANGES	bar	bar ext.
		psi int.
0...160	◆	◆
0...250	◆	◆
0...400	◆	◆
0...600	◆	◆
0...1000	◆	◆
0...1600	◆	◆

RANGES	psi
0...2000	◆
0...3000	◆
0...4000	◆
0...5000	◆
0...6000	◆
0...10000	◆
0...15000	◆

RG6 - 02/16

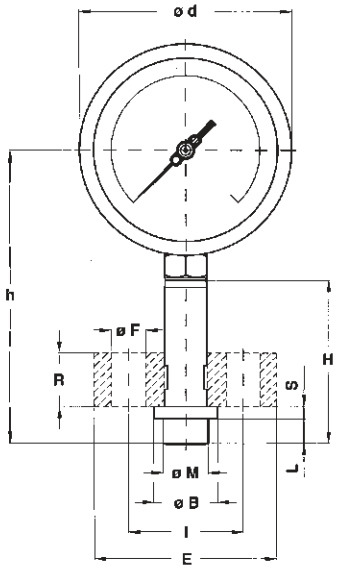

A - LOWER CONNECTION

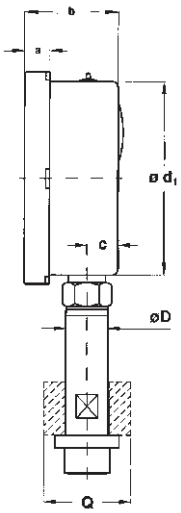

335 - SA 335
(with flange)

a	b	c	d	d_1	h
0.51" (13)	*1.90"* (48,5)	*0.62"* (16)	*4.35"* (110,6)	*3.97"* (101)	*6.08"* (154,5)

167 - SA 167

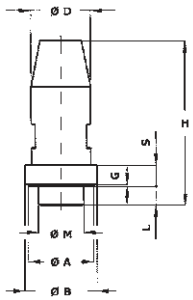

Customer drawing process connection available on request

Drawing	Ø D	Ø M	Ø A	Ø B	H	S	G	L	E	Ø F	I	R	Q	Weight
SA 335	*0.86"* (22)	*0.95"* (23,5)		*1.30"* (33,3)	*3.38"* (86)	*0.25"* (6,5)		*0.51"* (13)	*3.74"* (95)	*0.70"* (18)	*2.36"* (60)	*1.10"* (28)	*1.77"* (45)	*4.01 lbs* (1,82 kg)
SA 167	*1.22"* (31)	*0.95"* (23,5)	*1.33"* (34)	*1.47"* (37,5)	*3.38"* (86)	*0.43"* (11)	*0.04"* (1	*0.39"* (10)						*2.84 lbs* (1,29 kg)

dimensions : *inches* (mm)

OPTIONS

Model	Fillable	Filled
S35 - Connection as per SA 335, without flange	◆	◆
2D1 - ATEX II 2GD c version	*See the ATEX pressure gauges data-.sheet for technical details*	
L22 - Maximum pointer IP 65 on plexiglas window (1)	◆	◆
T32 - Safety glass window	◆	◆
TPC - Polycarbonate window	◆	◆

(1) Accuracy refers to the area free from the maximum pointer action.

"HOW TO ORDER" SEQUENCE

Section / Model / Case / Mounting / Diameter / Range / Process connection / Options

1	**OM**	**2**	**A**	**E**	**167**	**S35**
		3			**335**	**2D1...TPC**

Copyright © Nuova Fima srl. All rights reserved. Any part of this publication should not be reproduced without a written Nuova Fima's srl approval

NUOVA FIMA USA Inc.
www.nuovafima.com - e-mail: infousa@nuovafima.com
4123 Hollister, Suite G - TX 77080 Houston
TEL. +1 713.690.9800 - FAX +1 713.690.9803

NUOVA FIMA srl
www.nuovafima.com - e-mail: info@nuovafima.com
P.O. BOX 58 - VIA C. BATTISTI 59 - 28045 INVORIO (NO) ITALY
TEL. +39 0322 253200 - FAX +39 0322 253232

IN ORDER TO IMPROVE THEIR PRODUCTION, MESSRS. NUOVA FIMA RESERVE THE RIGHT TO THEMSELVES TO MAKE ALL THE MODIFICATIONS THAT THEY DEEM INDISPENSABLE AT ANY TIME. UPDATED DATA-SHEETS ARE AVAILABLE ON SITE: www.nuovafima.com

sanitary pressure gauges
DS 2.5", 4" (63-100mm)

74-06
Autorization NO. 1599

These instruments are designed for Sanitary, Food Process and Pharmaceutical Industries in compliance with standard n.74-06 of 3-A (Sanitary Standards Symbol Administrative Council). The absence of interstices and the mirror finishing of the components assure the best hygiene. The combination of pressure gauge and diaphragm seal allow to reduce the inner volumes and temperature error.
To reduce the effects of severe working conditions like vibrations and pulsations, the instruments can be filled.

1.SP.2 - Liquid fillable

Design: 74-06 SSI; ASME B40.1
Ranges: *from 0...15 psi to 0...600 psi*; (from 0...1 bar to 0...40 bar or equivalent units).
Accuracy: grade A as per ASME B40.1 (2-1-2%) for DS *4"* (100mm); grade B as per ASME B40.1 (3-2-3%) for DS *2.5"* (63mm);
Ambient temperature: *-13...+149 °F* (-25...+65 °C).
Process temperature: *-4...+212 °F* (-20...+100 °C).
Max *284°F* (140 °C) for 30 minutes during cleaning stage (C.I.P.) [1] and sterilization (S.I.P) [2].
Working pressure (referred to the full scale value)**:** max 75%.
Over pressure limit: not available.
Seal fill: mineral oil (FDA approved) for food service.
Protection degree: IP 67 as per EN 60529/IEC 529.
Process connection: AISI 316L st.st. with finishing Ra ≤0,76 µm (welded parts included), as per ASME BPE SF3.
Diaphragm: AISI 316L st.st. .
Welding: AISI 316L TIG.
Case: electro polished AISI 304 st.st.
Ring: polished AISI 304 st.st., crimped.
Window: plastic on DS 2.5" (63mm);
tempered glass on DS 4" (100 mm).
Dial: aluminium, white with black markings.
Pointer: aluminium black anodized.

1) C.I.P. = Cleaned In Place
2) S.I.P. = Steamed In Place - available for ranges > 1bar when steam pressure does not exceed the max admissible pressure on the connected instrument

1.SP.3 - Liquid filled

Case fill: glycerine 99,5% (USP, E.P. e F.U.) for food service.
Ambient temperature: *+32...+149 °F* (0...+65 °C).
Other features: as standard model.

1.SP.2.A.E.ATV - Autoclavable

This version can be autoclaved and sterilized at a max temperature of *304°F* (150 °C) for 1 hour.
Window: Polysulfone.
Gasket: silicon rubber.
Blow out vent and filling plug: VITON.
Other features: as standard model.

RC5 - 02/16

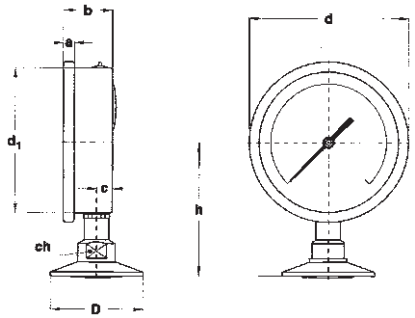

A - LOWER CONNECTION

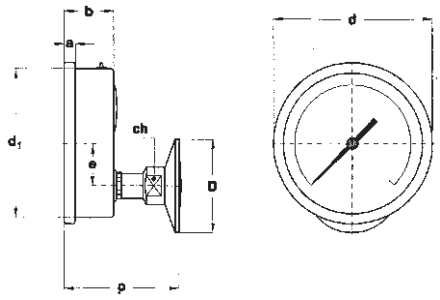

D - BACK CONNECTION, FOR DS *4"* (100mm) ONLY

DS	AT- 1"1/2	D BT- 2"	a	b	c	d	d_1	e	h	p	ch	Weight (1)
C *2.5"* (63 mm)	1.98"	2.51"	0.21"	1.10"	0.39"	2.67"	2.46"		3.11"		0.86"	0.61 lbs
E *4"* (100 mm)	1.98"	2.51"	0.29"	1.33"	0.43"	4.33"	0.39"	0.73"	3.50"	2.99"	0.86"	0.92 lbs

(dimensioni : *inches*)

(1) add *0.26 lbs* (0,12 kg) for DS *2.5"* (63 mm) and *0.66 lbs* (0,30 kg) for DS *4"* (100 mm), when filled

RANGES - "C" = DS *2.5"* (63mm); "E" = DS *4"* (100mm).

PRESSURE

TAB. 1

RANGE	bar
0...1 (1)	E
0...1,6 (1)	E
0...2,5	C-E
0...4	C-E
0...6	C-E
0...10	C-E
0...16	C-E
0...25	C-E
0...40	C-E

TAB. 2

RANGE	psi ext.
	bar int.
0...15 (1)	E
0...30	C-E
0...60	C-E
0...100	C-E
0...160	C-E
0...200	C-E
0...300	C-E
0...400	C-E
0...600	C-E

(1) available only for 2" CLAMP connection

VACUUM & COMPOUND

TAB. 3

RANGE	bar
-1...0 (1)	E
-1...0,6 (1)	E
-1...1,5	C-E
-1...3	C-E
-1...5	C-E
-1...9	C-E
-1...15	C-E

TAB. 4

RANGE (2)	psi ext.
	bar int.
-30...0 (1)	E
-30...15 (1)	E
-30...30	C-E
-30...60	C-E
-30...100	C-E
-30...150	C-E
-30...300	C-E

(1) available only for 2" CLAMP connection
(2) vacuum unit of measurement: "inHg"

FINISHING

0 -	Ra ≤0,76 µm, as per ASME BPE SF1	(1)
A -	Ra ≤0,51 µm, as per ASME BPE SF1	(1)
B -	Ra ≤0,38 µm, as per ASME BPE SF4 - electropolished	(1)

(1) welded parts included

OPTIONS

K16 -	Accuracy ± 1,6%
TPC -	Polycarbonate window

"HOW TO ORDER" SEQUENCE

Section / Model / Case / Mounting / Diameter / Special Version / Range / Process connection / Finishing / Options

1	SP	2 3	A D	C E	ATV	AT- BT-	0 A B	K16...TPC

IN ORDER TO IMPROVE THEIR PRODUCTION, MESSRS. NUOVA FIMA RESERVE THE RIGHT TO THEMSELVES TO MAKE ALL THE MODIFICATIONS THAT THEY DEEM INDISPENSABLE AT ANY TIME. UPDATED DATA-SHEETS ARE AVAILABLE ON SITE: www.nuovafima.com

NUOVA FIMA USA Inc.
www.nuovafima.com - e-mail: infousa@nuovafima.com
4123 Hollister, Suite G - TX 77080 Houston
TEL. +1 713.690.9800 - FAX +1 713.690.9803

NUOVA FIMA srl
www.nuovafima.com - e-mail: info@nuovafima.com
P.O. BOX 58 - VIA C. BATTISTI 59 - 28045 INVORIO (NO) ITALY
TEL. +39 0322 253200 - FAX +39 0322 253232

MN15

bourdon tube test gauges
all stainless steel construction
class 0,6%
DS 6" (150mm)

PED 2014/68/UE

These instruments have been designed for laboratories, instrument testing or recalibration facilities and in other applications where accuracy and repeatability are of primary importance. Thay can be used with fluids or gasses that do not have high viscosity and do not cristallize. The wetted parts in AISI 316L permits to use them in worse working conditions determined by aggressive ambients or process fluids. Upon request we can supply the calibration certificate issued by an Internationally recognized laboratory of ACCREDIA (Ex S.I.T. - Italian Calibration Service).

1.15.1 - Standard Model

Design: EN837-1.
Safety designation: S1 as per EN 837-2.
Accuracy class: 0,6 as per EN 837-1.
Ambient temperature: *-13...+149 °F* (-25...+65 °C).
Process fluid temperature: *-40...+302°F* (-40...+150 °C).
Calibration temperature: *68°F* (+20 °C).
Thermal drift: ±0,4 %/10 K of range (starting from *68°F* - 20°C).
Working pressure: max 75% of FSV.
Overpressure limit: 30% of FSV.
Protection degree: IP 55 as per IEC 529.
Socket material: AISI 316L st.st.
Bourdon tube: AISI 316L st.st. seamless tube.
Case: stainless steel.
Ring: stainless steel, bayonet lock.
Window: tempered glass.
Movement: stainless steel with internal limit stops fro minimum and maximum pressure.
Dial: aluminium,white with black markings and anti-parallax mirror band.
Pointer: adjustable, aluminium, black, knife-edge micrometer.

RANGE	Minor graduation	Figure interval	bar	kPa	MPa	psi
-1...0	0,005	0,10	◆			
0...0,6	0,002	0,05	◆		◆	
0...1	0,005	0,1	◆		◆	
0...1,6	0,005	0,1	◆		◆	
0...2,5	0,01	0,1	◆		◆	
0...4	0,02	0,2	◆		◆	
0...6	0,02	0,5	◆		◆	
0...10	0,05	1	◆		◆	◆
0...16	0,05	1	◆		◆	◆
0...25	0,1	1	◆		◆	
0...30	0,1	2	◆		◆	◆
0...40	0,2	2	◆		◆	
0...60	0,2	5	◆	◆	◆	◆
0...100	0,5	10	◆	◆		◆
0...160	0,5	10	◆	◆		◆
0...250	1	10	◆	◆		
0...300	1	20	◆	◆		◆
0...400	2	20	◆	◆		◆
0...600	2	50	◆	◆		◆
0...1000	5	100				◆
0...2000	10	100				◆
0...3000	10	200				◆
0...4000	20	200				◆
0...6000	20	500				◆

ISO 9001 : 2008
Cert. nr. 0433/6

RG4 - 05/14

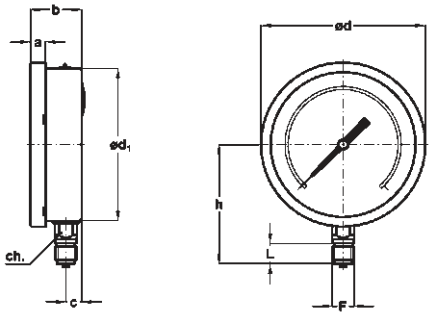

A - LOWER CONNECTION

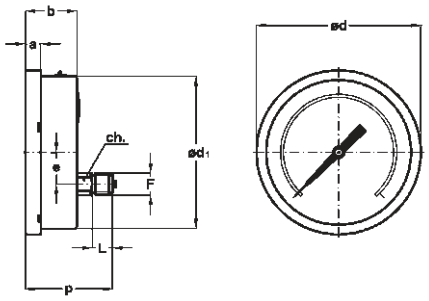

D - BACK CONNECTION

Mounting	F	a	b	c	ød	ød$_1$	e	h	p	ch	L	Weight
Lower	41M - G 1/2 A 43M - 1/2-14 NPT	*0.59"* (15)	*1.91"* (50,5)	*1.98"* (15,5)	*6.33"* (161)	*5.88"* (149,6)		*4.60"* (117)		*0.86"* (22)	*0.78"* (20)	*2.07 lbs* (0,94 kg)
Back	41M - G 1/2 A 43M - 1/2-14 NPT	*0.59"* (15)	*1.91"* (50,5)		*6.33"* (161)	*5.88"* (149,6)	*1.22"* (31)		*3.36"* (85,5)	*0.86"* (22)	*0.78"* (20)	*2.07 lbs* (0,94 kg)

dimensions : *inches* (mm)

PRESSURE GAUGE HOLDER CASE

Instruments with radial connection can be supplied of pressure gauge holder case, codE **5VAL**.

OPTIONS

B -	"U"-clamp, for back connection pressure gauges
C -	Back flange, for lower connection pressure gauges
E -	Front flange, for back connection pressure gauges
CE1 -	ACCREDIA certificate (pressure gauges)
CE3 -	ACCREDIA certificate (vacuum gauges)
T32 -	Safety glass window

"HOW TO ORDER" SEQUENCE

Section / Model / Case / Mounting / Diameter / Range / Process connection / Options

1	15	1	A	G	41M	B...E
			D		43M	CE1...T32

IN ORDER TO IMPROVE THEIR PRODUCTION, MESSRS. NUOVA FIMA RESERVE THE RIGHT TO THEMSELVES TO MAKE ALL THE MODIFICATIONS THAT THEY DEEM INDISPENSABLE AT ANY TIME. UPDATED DATA-SHEETS ARE AVAILABLE ON SITE: www.nuovafima.com

Copyright © Nuova Fima srl. All rights reserved. Any part of this publication should not be reproduced without a written Nuova Fima's srl approval

NUOVA FIMA USA Inc.
www.nuovafima.com - e-mail: infousa@nuovafima.com
4123 Hollister, Suite G - TX 77080 Houston
TEL. +1 713.690.9800 - FAX +1 713.690.9803

NUOVA FIMA srl
www.nuovafima.com - e-mail: info@nuovafima.com
P.O. BOX 58 - VIA C. BATTISTI 59 - 28045 INVORIO (NO) ITALY
TEL. +39 0322 253200 - FAX +39 0322 253232

MN16

bourdon tube test gauges
all stainless steel construction, “solid-front”
class 0,6%
DS 6” (150mm)

PED 2014/68/UE

These instruments have been designed for laboratories, instrument testing or recalibration facilities and in other applications where accuracy and repeatability are of primary importance. These intruments have a solid separating wall in stainless steel, placed between the dial and the elastic element and an integral blow out back that is released from the case whenever a pressure is created inside the case, due to leaks or accidental ruptures of the elastic element. Thay can be used with fluids or gasses that do not have high viscosity and do not cristallize. The wetted parts in AISI 316L permits to use them in worse working conditions determined by aggressive ambients or process fluids. Upon request we can supply the calibration certificate issued by an Internationally recognized laboratory of ACCREDIA (Ex S.I.T. - Italian Calibration Service).

1.16.1 - Standard Model

Design: EN837-1.
Safety designation: S3 as per EN 837-2.
Accuracy class: 0,6 as per EN 837-1.
Ambient temperature: *-13...+149 °F* (-25...+65 °C).
Process fluid temperature: *-40...+302°F* (-40...+150 °C).
Calibration temperature: *68°F* (+20 °C).
Thermal drift: ±0,4 %/10 K of range (starting from *68°F* - 20°C).
Working pressure: max 75% of FSV.
Overpressure limit: 30% of FSV.
Protection degree: IP 55 as per IEC 529.
Socket material: AISI 316L st.st.
Bourdon tube: AISI 316L st.st. seamless tube.
Case: stainless steel.
Ring: stainless steel, bayonet lock.
Blow out disk: stainless steel
Window: safety glass.
Movement: stainless steel with internal limit stops of minimum and maximum pressure.
Dial: aluminium, white with black markings and anti-parallax mirror band
Pointer: adjustable, aluminium, black, knife-edge micrometer

RANGE	Minor graduation	Figure interval	bar	kPa	MPa	psi
-1...0	0,005	0,10	◆			
0...0,6	0,002	0,05	◆		◆	
0...1	0,005	0,1	◆		◆	
0...1,6	0,005	0,1	◆		◆	
0...2,5	0,01	0,1	◆		◆	
0...4	0,02	0,2	◆		◆	
0...6	0,02	0,5	◆		◆	
0...10	0,05	1	◆		◆	◆
0...16	0,05	1	◆		◆	◆
0...25	0,1	1	◆		◆	
0...30	0,1	2	◆		◆	◆
0...40	0,2	2	◆		◆	
0...60	0,2	5	◆	◆	◆	◆
0...100	0,5	10	◆	◆		◆
0...160	0,5	10	◆	◆		◆
0...250	1	10	◆	◆		
0...300	1	20	◆	◆		◆
0...400	2	20	◆	◆		◆
0...600	2	50	◆	◆		◆
0...1000	5	100				◆
0...2000	10	100				◆
0...3000	10	200				◆
0...4000	20	200				◆
0...6000	20	500				◆

bourdon tube test gauges, all stainless steel construction, "solid-front" class 0,6%, DS 6" (150mm)

MN16

RC4 - 05/14

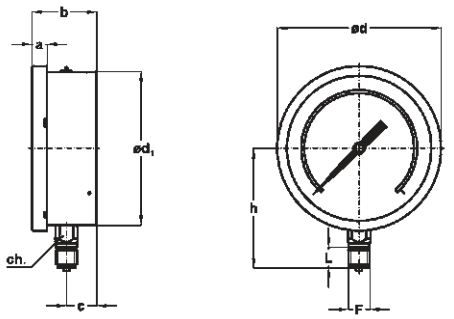

A - LOWER CONNECTION

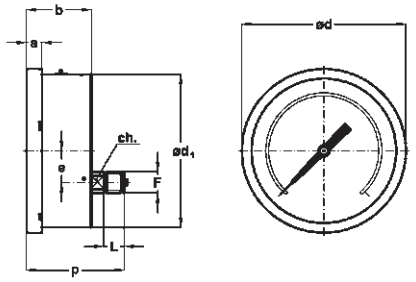

D - BACK CONNECTION

Mounting	F	a	b	c	ch	ød	ød$_1$	e	h	p	L	Weight
Lower	**41M** - G 1/2 A **43M** - 1/2-14 NPT	*0.59"* (15)	*2.51"* (64)	*1.18"* (30)	*0.86"* (22)	*6.33"* (161)	*5.92"* (150,5)		*4.60"* (117)		*0.78"* (20)	*2.49 lbs* (1,13 kg)
Back	**41M** - G 1/2 A **43M** - 1/2-14 NPT	*0.59"* (15)	*2.51"* (64)		*0.66"* (17)	*6.33"* (161)	*5.92"* (150,5)	*1.22"* (31)		*3.79"* (96,5)	*0.78"* (20)	*2.27 lbs* (1,03 kg)

dimensions : *inches* (mm)

PRESSURE GAUGE HOLDER CASE

Instruments with radial connection can be supplied of pressure gauge holder case, codE **5VAL**.

OPTIONS

C -	Back flange, for lower connection pressure gauges
E -	Front flange, for back connection pressure gauges
CE1 -	ACCREDIA certificate (pressure gauges)
CE3 -	ACCREDIA certificate (vacuum gauges)
P02 -	Oxygen service

"HOW TO ORDER" SEQUENCE

Section / Model / Case / Mounting / Diameter / Range / Process connection / Options

1	**16**	**1**	**A**	**G**	**41M**	**C...E**
			D		**43M**	**CE1...P02**

Copyright © Nuova Fima srl. All rights reserved. Any part of this publication should not be reproduced without a written Nuova Fima's srl approval

NUNUOVA FIMA USA Inc.
wwwww.nuovafima.com - e-mail: infousa@nuovafima.com
41,4123 Hollister, Suite G - TX 77080 Houston
TEITEL. +1 713.690.9800 - FAX +1 713.690.9803

NUOVA FIMA srl
www.nuovafima.com - e-mail: info@nuovafima.com
P.O. BOX 58 - VIA C. BATTISTI 59 - 28045 INVORIO (NO) ITALY
TEL. +39 0322 253200 - FAX +39 0322 253232

IN ORDER TO IMPROVE THEIR PRODUCTION, MESSRS. NUOVA FIMA RESERVE THE RIGHT TO THEMSELVES TO MAKE ALL THE MODIFICATIONS THAT THEY DEEM INDISPENSABLE AT ANY TIME. UPDATED DATA-SHEETS ARE AVAILABLE ON SITE: www.nuovafima.com

MN17

bourdon tube test gauges
“solid-front” , class 0,25%
DS 6” (150mm)

These instruments have been designed for laboratories, instrument testing or recalibration facilities and in other applications where accuracy and repeatability are of primary importance. These intruments have a solid separating wall in stainless steel, placed between the dial and the elastic element and an integral blow out back that is released from the case whenever a pressure is created inside the case, due to leaks or accidental ruptures of the elastic element. Thay can be used with fluids or gasses that do not have high viscosity and do not cristallize. The wetted parts in beryllium copper permits higher accuracy. Upon request we can supply the calibration certificate issued by an Internationally recognized laboratory of ACCREDIA (Ex S.I.T. - Italian Calibration Service).

1.17.1 - Standard Model

Design: EN837-1.
Safety designation: S3 as per EN 837-2.
Accuracy class: 0,25 as per EN 837-1.
Ambient temperature: *+59...+149 °F* (+15...+65 °C).
Process fluid temeprature: *+149°F* (max +65 °C).
Calibration temperature: *68°F* (+20 °C).
Thermal drift: ±0,1 %/10 K of range (starting from *68°F* - 20°C).
Working pressure: max 75% of FSV.
Overpressure limit:
25% of FSV for ranges ≤ *1000 psi* (60 bar).
15% of FSV for ranges ≥ *1500 psi* (100 bar).
Protection degree: IP 55 as per IEC 529.
Socket material: AISI 316L st.st.
Bourdon tube: beryllium copper alloy.
Case: stainless steel.
Ring: stainless steel, bayonet lock.
Blow out disk: stainless steel.
Window: safety glass.
Movement: high precision type, horology alloy.
Dial: aluminium, green with black markings and anti-parallax mirror band.
Pointer: adjustable, aluminium, black, knife-edge.

RANGE	Minor graduation	Figure interval	bar	kPa	MPa	psi
-1... 0	0,005	0,10	◆			
0... 0,6	0,002	0,05	◆		◆	
0...1	0,005	0,1	◆		◆	
0...1,6	0,005	0,1	◆		◆	
0...2,5	0,01	0,1	◆		◆	
0...4	0,02	0,2	◆		◆	
0...6	0,02	0,5	◆		◆	
0...10	0,05	1	◆		◆	◆
0...16	0,05	1	◆		◆	◆
0...25	0,1	1	◆		◆	
0...30	0,1	2			◆	◆
0...40	0,2	2	◆		◆	
0...60	0,2	5	◆	◆	◆	◆
0...100	0,5	10	◆	◆	◆	◆
0...160	0,5	10	◆	◆		◆
0...250	1	10	◆	◆		
0...300	1	20	◆	◆		◆
0...400	2	20	◆	◆		◆
0...600	2	50	◆	◆		◆
0...1000	5	100	◆			◆
0...2000	10	100				◆
0...3000	10	200				◆
0...4000	20	200				◆
0...6000	20	500				◆
0...10000	50	1000				◆
0...15000	50	1000				◆

RC4 - 05/14

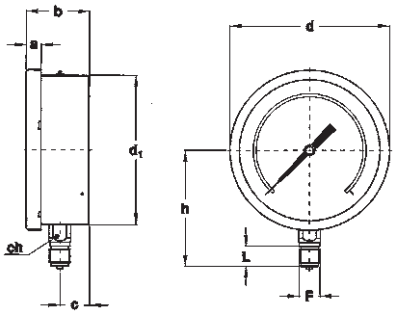

A - LOWER CONNECTION

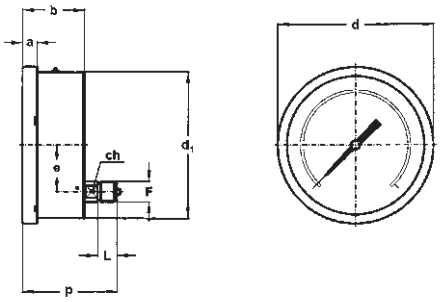

D - BACK CONNECTION

Mounting	F	a	b	c	ch	d	d_1	e	h	p	L	Weight
Lower	41M - G 1/2 A 43M - 1/2-14 NPT	*0.59”* (15)	*2.51”* (64)	*1.14”* (29)	*0.94”* (24)	*6.33”* (161)	*5.92”* (150,5)		*4.64”* (118)		*0.78”* (20)	*2.62 lbs* (1,19 kg)
Back	41M - G 1/2 A 43M - 1/2-14 NPT	*0.59”* (15)	*2.51”* (64)		*0.66”* (17)	*6.33”* (161)	*5.92”* (150,5)	*1.88”* (47,8)		*3.83”* (97,5)	*0.78”* (20)	*2.42 lbs* (1,10 kg)

dimensions : *inches* (mm)

PRESSURE GAUGE HOLDER CASE

Instruments with radial connection can be supplied of pressure gauge holder case, codE **5VAL**.

OPTIONS

C -	Back flange, for lower connection pressure gauges
E -	Front flange, for back connection pressure gauges
P02 -	Oxygen service
CE1 -	ACCREDIA certificate (pressure gauges)
CE3 -	ACCREDIA certificate (vacuum gauges)

“HOW TO ORDER” SEQUENCE

Section / Model / Case / Mounting / Diameter / Range / Process connection / Options

1	17	1	A	G	41M	C...E
			D		43M	P02...CE3

Copyright © Nuova Fima srl. All rights reserved. Any part of this publication should not be reproduced without a written Nuova Fima’s srl approval

NUOVA FIMA USA Inc.
www.nuovafima.com - e-mail: infousa@nuovafima.com
4123 Hollister, Suite G - TX 77080 Houston
TEL. +1 713.690.9800 - FAX +1 713.690.9803

NUOVA FIMA srl
www.nuovafima.com - e-mail: info@nuovafima.com
P.O. BOX 58 - VIA C. BATTISTI 59 - 28045 INVORIO (NO) ITALY
TEL. +39 0322 253200 - FAX +39 0322 253232

IN ORDER TO IMPROVE THEIR PRODUCTION, MESSRS. NUOVA FIMA RESERVE THE RIGHT TO THEMSELVES TO MAKE ALL THE MODIFICATIONS THAT THEY DEEM INDISPENSABLE AT ANY TIME. UPDATED DATA-SHEETS ARE AVAILABLE ON SITE: www.nuovafima.com

MN25

bourdon tube test gauges
all stainless steel construction, "solid-front"
class 0,25%
DS 6" (150mm)

These instruments have been designed for laboratories, instrument testing or recalibration facilities and to be used in other applications where accuracy and repeatability are of primary importance. These intruments have a solid separating wall in stainless steel, placed between the dial and the elastic element and an integral blow out back that is released from the case whenever a pressure is created inside the case, due to leaks or accidental ruptures of the elastic element. The process fluids should be gases or liquids, they must not have high viscosity and must not cristalize. The wetted parts in AISI 316L allow to use them in the worst working conditions determined by aggressive medium and environment. Upon request we can supply the calibration certificate issued by an Internationally recognized laboratory of ACCREDIA (Ex S.I.T. - Italian Calibration Service).

1.25.1 - Standard Model

Design: EN 837-1.
Safety designation: S3 as per EN 837-2.
Accuracy class: 0,25 as per EN 837-1.
Ambient temperature: *-4...+149 °F* (-20...+65 °C).
Process fluid temeprature: *+149°F* (max +65 °C.)
Calibration temperature: *68°F* (+20 °C).
Thermal drift: ±0,4 %/10 K of range (starting from *68°F* - 20°C).
Working pressure: max 75% of FSV
Overpressure limit:
25% of FSV for ranges up to *1450 psi* (100 bar);
15% of FSV for ranges over *1450 psi* (100 bar).
Protection degree: IP 55 as per IEC 529.
Socket material: AISI 316L st.st.
Bourdon tube: AISI 316L st.st. seamless tube.
Case: stainless steel.
Ring: stainless steel, bayonet lock.
Blow out disk: stainless steel.
Window: safety glass.
Movement: high precision, horology alloy.
Dial: aluminium, white with black markings and anti-parallax mirror band.
Pointer: adjustable, aluminium, black, knife-edge micrometer.

RANGE	Minor graduation	Figure interval	bar	kPa	MPa	psi
0...1	0,005	0,1	◆		◆	
0...1,6	0,005	0,1	◆		◆	
0...2,5	0,01	0,1	◆		◆	
0...4	0,02	0,2	◆		◆	
0...6	0,02	0,5	◆		◆	
0...10	0,05	1	◆		◆	
0...16	0,05	1	◆		◆	
0...25	0,1	1	◆		◆	
0...30	0,1	2	◆		◆	◆
0...40	0,2	2	◆		◆	
0...60	0,2	5	◆			◆
0...100	0,5	10	◆	◆		◆
0...160	0,5	10	◆	◆		◆

bourdon tube test gauges, all stainless steel construction "solid-front", class 0,25%, DS 6" (150mm)

MN25

RC5 - 08/14

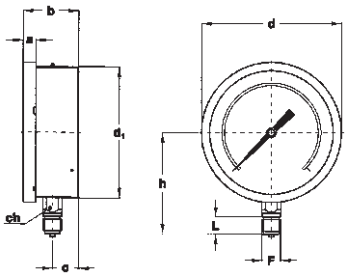

A - LOWER CONNECTION

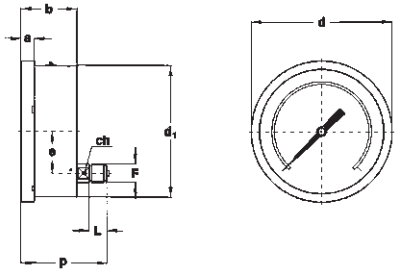

D - BACK CONNECTION

Mounting	F	a	b	c	d	d_1	e	h	p	L	ch	Weight
Lower	**41M** G 1/2 A	*0.59"* (15)	*2.51"* (64)	*1.14"* (29)	*6.33"* (161)	*5.92"* (150,5)		*4.60"* (117)		*0.78"* (20)	*0.86"* (22)	*2.62 lbs* (1,19 kg)
Back	**43M** 1/2-14 NPT	*0.59"* (15)	*2.51"* (64)		*6.33"* (161)	*5.92"* (150,5)	*1.88"* (47,8)		*3.83"* (97,5)	*0.78"* (20)	*0.66"* (17)	*2.42 lbs* (1,10 kg)

dimensions : *inches* (mm)

PRESSURE GAUGE HOLDER CASE

Instruments with radial connection can be supplied of pressure gauge holder case, code **5VAL**.

OPTIONS

C -	Back flange, for lower connection pressure gauges
CE1 -	ACCREDIA certificate (pressure gauges)
P02 -	Oxygen service

"HOW TO ORDER" SEQUENCE

Section / Model /Case / Mounting / Diameter / Range / Process connection / Options

1	**25**	**1**	**A**	**G**	**41M**	**C**
			D		**43M**	**CE1...P02**

Copyright © Nuova Fima S.r.l. All rights reserved. Any part of this publication should not be reproduced without a written Nuova Fima's S.p.A. approval

NUOVA FIMA USA Inc.
www.nuovafima.com - e-mail: infousa@nuovafima.com
4123 Hollister, Suite G - TX 77080 Houston
TEL. +1 713.690.9800 - FAX +1 713.690.9803

NUOVA FIMA srl
www.nuovafima.com - e-mail: info@nuovafima.com
P.O. BOX 58 - VIA C. BATTISTI 59 - 28045 INVORIO (NO) ITALY
TEL. +39 0322 253200 - FAX +39 0322 253232

IN ORDER TO IMPROVE THEIR PRODUCTION, MESSRS. NUOVA FIMA RESERVE THE RIGHT TO THEMSELVES TO MAKE ALL THE MODIFICATIONS THAT THEY DEEM INDISPENSABLE AT ANY TIME. UPDATED DATA-SHEETS ARE AVAILABLE ON SITE: **www.nuovafima.com**

MN17/L

laboratory pressure gauges
class 0,1%
DS 10" (250mm)

These instruments have been designed for use as in laboratories, instrument testing or recalibration facilities or in applications where accuracy and repeatability are of prime importance. They can be used with gaseous or liquid media which do not corrode copper alloy and which do not have high viscosity nor cristalize. Each instruments is delivered with a Nuova Fima calibration report, who guarantee traceability to the national and international primary master of pressure measurements. Upon request we can supply the calibration certificate issued by an Internationally recognized laboratory of ACCREDIA (Ex S.I.T. - Italian Calibration Service).

1.27.1 - Standard Model

Design: EN837-1.
Safety designation: S1 as per EN 837-2.
Accuracy class:
0,1 as per EN837-1, for ranges ≤ *8700 psi* (600 bar);
0,25 as per EN837-1, for ranges > *8700 psi* (600 bar).
Ambient temperature: *+50...+140°F* (+10...+60 °C).
Process fluid temeprature: *68°F* (+20 °C).
Calibration temperature: *68°F* (+20 °C).
Thermal drift: ±0,04 %/10 K of range (starting from *68°F* - 20°C).
Working pressure: max 75% of FSV
Overpressure limit: not suitable.
Protection degree: IP 44 as per EN 60529/IEC 529.
Socket material: AISI 316L st.st.
Bourdon tube: beryllium copper alloy.
Case: aluminium black painted.
Ring: aluminium black painted.
Window: plastic.
Movement: high precision.
Dial: aluminium,green with black markings and anti-parallax mirror band.
Scale amplitude: 310°.
Zero calibration: external, manual.
Pointer: balanced, knife-edge micrometer.

PRESSURE GAUGES

RANGES	Minor graduation	Figure interval	bar	kPa	MPa	PSI	bar ext.* kg/cm² psi int.
0...1	0,002	0,05	◆		◆		
0...1,6	0,005	0,1	◆		◆		
0...2,5	0,005	0,1	◆		◆		◆
0...4	0,01	0,2	◆		◆		◆
0...6	0,02	0,5	◆		◆		◆
0...10	0,02	1	◆		◆		◆
0...16	0,05	1	◆		◆	◆	◆
0...25	0,05	0,5	◆		◆	◆	◆
0...40	0,1	2	◆		◆	◆	◆
0...60	0,2	5	◆		◆	◆	◆
0...100	0,2	5	◆	◆	◆	◆	◆
0...160	0,5	10	◆	◆	◆	◆	◆
0...250	0,5	10	◆	◆		◆	◆
0...400	1	20	◆	◆		◆	◆
0...600	2	50	◆	◆		◆	◆
0...1000	2	50	◆	◆		◆	◆
0...1600	5	100	◆	◆		◆	◆

* accuracy refers to the outer scale.

VACUUM

RANGES	Figure interval	Minor graduation	bar ext.* mm Hg inch Hg int.
-1÷0	0,002	0,02	F

* accuracy refers to the outer scale.

ISO 9001 : 2008
Cert. nr. 0433/6

RC8 - 05/14

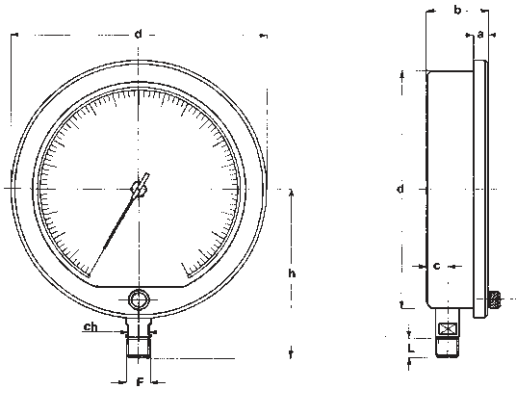

A - LOWER CONNECTION

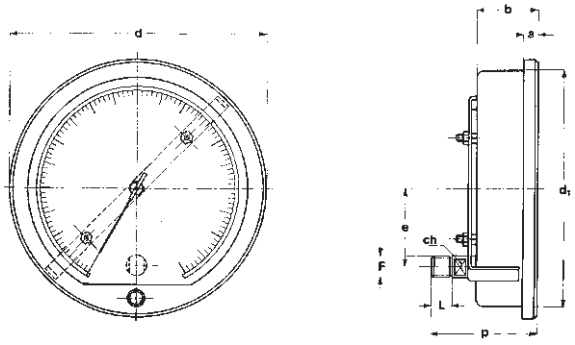

B - U" CLAMP,
for back connection
flush mounting

Mounting	F	a	b	c	d	d_1	e	h	L	ch	p	Weight
Lower	**41M** - G 1/2 A **43M** - 1/2-14 NPT	*0.59"* (15)	*2.44"* (63)	*0.76"* (19,5)	*10.62"* (270)	*9.72"* (247)		*6.69"* (170)	*0.78"* (20)	*0.66"* (17)		*6.83 lbs* (3,1 kg)
Back	**41M** - G 1/2 A **43M** - 1/2-14 NPT	*0.59"* (15)	*2.44"* (63)		*10.62"* (270)	*9.72"* (247)	*3.14"* (80)		*0.78"* (20)	*0.66"* (17)	*3,72"* (111,5)	*1.47 lbs* (3,25 kg)

dimensions : *inches* (mm)

OPTIONS

B -	"U" Clamp (1)
CE1 -	ACCREDIA certificate (pressure gauges)
CE3 -	ACCREDIA certificate (vacuum gauges)
K02 -	Accuracy class 0,25% as per EN837-1, for ranges ≤ 600 bar

(1) to be ordered for mounting cod. "D"

"HOW TO ORDER" SEQUENCE

Section	Model	Case	Mounting	Diameter	Range	Process connection	Options
1	**27**	**1**	**A** **D**	**I**		**41M** **43M**	**B...K02**

Copyright © Nuova Fima srl. All rights reserved. Any part of this publication should not be reproduced without a written Nuova Fima's srl approval

NUOVA FIMA USA Inc.
www.nuovafima.com - e-mail: infousa@nuovafima.com
4123 Hollister, Suite G - TX 77080 Houston
TEL. +1 713.690.9800 - FAX +1 713.690.9803

NUOVA FIMA srl
www.nuovafima.com - e-mail: info@nuovafima.com
P.O. BOX 58 - VIA C. BATTISTI 59 - 28045 INVORIO (NO) ITALY
TEL. +39 0322 253200 - FAX +39 0322 253232

IN ORDER TO IMPROVE THEIR PRODUCTION, MESSRS. NUOVA FIMA RESERVE THE RIGHT TO THEMSELVES TO MAKE ALL THE MODIFICATIONS THAT THEY DEEM INDISPENSABLE AT ANY TIME. UPDATED DATA-SHEETS ARE AVAILABLE ON SITE: **www.nuovafima.com**

MGS72

bourdon tube pressure gauges with microswitch, DS 4" (100mm)

Compliance to requirements of LVD 2014/35/EU - PED 2014/68/EU

These instruments are designed for applications in conventional power stations. They safety control the automatic regulation of hydraulic and pneumatic equipment.

1.72.1 - Standard Model

Design: EN837-1.
Safety designation: S1 as per EN 837-2.
Ranges: *from 0...30 to 0...10000 psi* (from 0...1,6 to 0...600 bar or equivalent units).
Accuracy: class 2,5 as per EN 837-1.
Ambient temperature: *-13...+149 °F* (-25...+65 °C).
Process fluid temperature: *13...+149°F* (-25...+65 °C) for ranges ≤ *580 psi* (40 bar); *-13...+248°F* (-25...+120 °C) for ranges ≥ *870 psi* (60 bar).
Working pressure: max 75% of the FSV.
Overpressure: not suitable.
Protection degree: IP 44 as per EN 60529/IEC 529.
Electrical specifications: N. 1 SPDT microswitch.
Contact setting: between 10% and 75% of FSV.
Differential: fixed, between 2% and 4% of FSV.

Socket material: copper alloy.
Bourdon tube: copper alloy for ranges ≤ *580 psi* (40 bar); AISI 316L st.st. for ranges > *870 psi* (60 bar).
Case: stainless steel.
Ring: stainless steel, bayonet lock.
Window: plastic.
Movement: stainless steel.
Dial: aluminium, white with black markings.
Pressure pointer: aluminium, black.
Set pointer: aluminium, red.
Adjusting key: plastic, removable.
Junction box: glass fibre reinforced poliammid with cable exit ø *0.23...0.35"* (6...9 mm) as per EN 175301-803 (Ex DIN 43650).

MICROSWITCH: SETTING

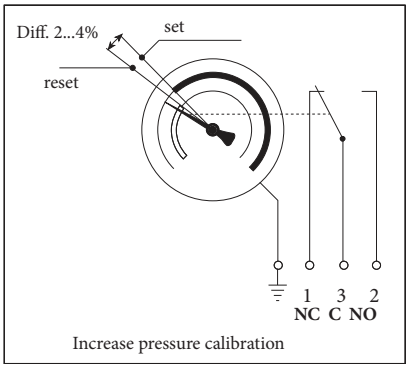

Increase pressure calibration

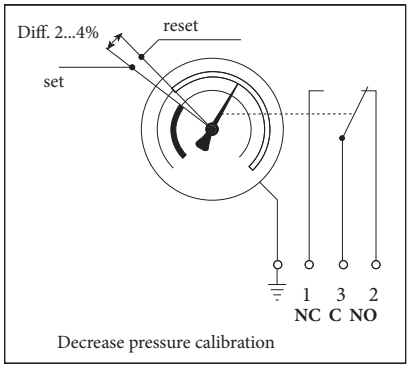

Decrease pressure calibration

ISO 9001 : 2008
Cert. nr. 0433/6

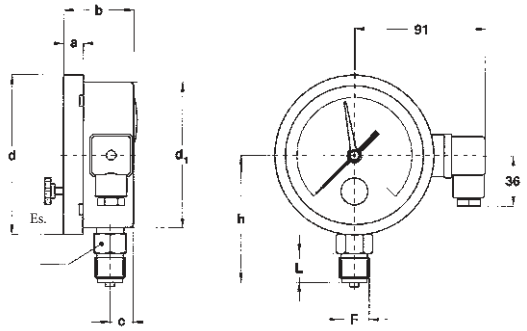

A - LOWER CONNECTION

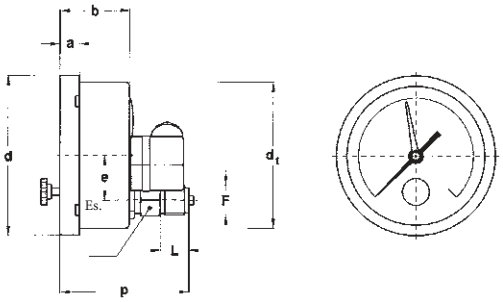

D - BACK CONNECTION

Mounting	F	a	b	c	d	d_1	e	h	p	L	Es.	Weight
Lower	41M - G 1/2 A	*0.51"* (13)	*1.90"* (48,5)	*0.62"* (16)	*4.35"* (110,6)	*3.97"* (101)		*3.48"* (88,5)		*0.78"* (20)	*0.86"* (22)	*1.32 lbs* (0,6 kg)
Back							*1.22"* (31)		*3.65"* (90)			

dimensions : *inches* (mm)

RATING LOAD

Volt	DC	AC	Inductive load
220	0,3 A	4 A	4 A
110	0,4 A	4 A	4 A
48	4 A	4 A	4 A
24	4 A	4 A	4 A

WIRING

Wiring	Junction box	Cable
NC	Contact N.°1	Brown
NO	Contact N.°2	Black
C	Contact N.°3	Blue
Ground	Ground	Yellow-Green

OPTIONS

RSV -	Under-glass adjusting (IP 55 protection degree)
D30 -	Differential between 6% and 10% of FSV (for ranges ≥ *60 psi* - 2,5 bar)
S06 -	Brass restrictor ø *0.015"* (0,4 mm) for ranges ≤ *600 psi* (40 bar)
T40 -	Calibration for pressure decrease

"HOW TO ORDER" SEQUENCE

Section / Model / Case / Mounting / Diameter / Range / Process connection / Options

1	**72**	**1**	**A**	**E**		**41M**	**RSV...T40**
			D				

IN ORDER TO IMPROVE THEIR PRODUCTION, MESSRS. NUOVA FIMA RESERVE THE RIGHT TO THEMSELVES TO MAKE ALL THE MODIFICATIONS THAT THEY DEEM INDISPENSABLE AT ANY TIME. UPDATED DATA-SHEETS ARE AVAILABLE ON SITE: www.nuovafima.com

Copyright © Nuova Fima S.r.l. All rights reserved. Any part of this publication should not be reproduced without a written Nuova Fima's S.p.A. approval

NUOVA FIMA USA Inc.
www.nuovafima.com - e-mail: infousa@nuovafima.com
4123 Hollister, Suite G - TX 77080 Houston
TEL. +1 713.690.9800 - FAX +1 713.690.9803

NUOVA FIMA srl
www.nuovafima.com - e-mail: info@nuovafima.com
P.O. BOX 58 - VIA C. BATTISTI 59 - 28045 INVORIO (NO) ITALY
TEL. +39 0322 253200 - FAX +39 0322 253232

MCE10

pressure gauges with electric contacts
DS 4" (100mm)

Compliance to requirements of
LVD 2014/35/EU - PED 2014/68/EU

They are used to control the electrical operation of compressors, pumps, presses, hydraulic and pneumatics equipment, chemical and petrochemical plant. The contacts open or close the circuit depending on the position of the indicating pointer and they are adjustable over the whole range. For application on severe working conditions, such as rapid and frequent pressure change, vibration and pulsation, they are manufactured with the case liquid filled. The filling drastically reduces the effect of such factors as well as those caused by a corrosive atmosphere, giving longer life and better performances of the pressure gauge and their electric contacts. They are also available with inductive contacts intrinsecally safe.

1.M1.1 - Standard Model

Ranges: *from 0...30 to 0...15000 psi* (from 0...1 to 0...1000 bar or equivalent units).
Mechanical contact: sliding contact, magnetic snap-action, electronic, inductive.
Accuracy: ± 1,0% as per UNI 8293 - DIN 16085 (1).
Ambient temperature: *-13...+149 °F* (-25...+65 °C).
Process fluid temperature: *max +212 °F* (+100 °C).
Working pressure: max 75% of the full scale value.
Over pressure: not suitable.
Protection: IP 55 as per IEC 529.
Socket material: copper alloy .
Elastic element:
copper alloy for pressure ranges ≤ *580 psi* (40 bar);
AISI 316 L st.st. for pressure ranges ≥ *870 psi* (60 bar).
Case: stainless steel.
Ring: stainless steel, bayonet lock.
Window: plastic.
Movement: stainless steel.
Dial: aluminium, white with black markings.
Pointer: not adjustable, aluminium, black.

1.M1.3 - Filled Model

Mechanical contact: magnetic snap-action, electronic, inductive.
Accuracy: ± 1,6% as per UNI 8293 - DIN 16085 (1).
Filling liquid: silicon oil.
Protection: IP 65 as per IEC 529.
Other features: as Standard Model.

(1) The addition of mechanical electric contacts affects the accuracy of instruments such that 1% becomes 1,5%, 1,6% becomes 2,4% etc. (add the 50% of accuracy; if the contact is of the magnetically assisted type, this value can't be added within the ±5% of setting point).

RC2 - 08/14

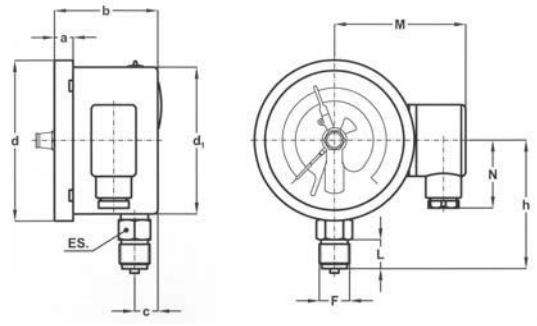

A - LOWER CONNECTION

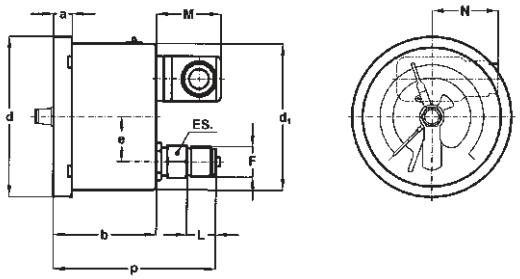

D - BACK CONNECTION

Mounting	F	a	b (1)	c	d	d_1	e	h	p (1)	N	L	ch	Weight (2)
Lower	**41M** G 1/2 A	*0.51"* (13)	*2.81"- 3.24"* (71,5 - 82,5)	*0.63"* (16.1)	*4.35"* (110,6)	*3.97"* (101)		*3.48"* (88,5)		*1.81"* (46)	*0.78"* (20)	*0.86"* (22)	*1.54 lbs* (0,7 kg)
Back	**43M** 1/2-14 NPT						*1.22"* (31)		*4.44" - 4.87"* (112,9 - 123,9)				

dimensions : *inches* (mm)

(1) dimensions for single/double contact;
(2) when filled, add *0.77 lbs* (0,35 kg) for single contact and *0.88 lbs* (0,4 kg) for double contact

CONTACT TYPE (1)

MODEL	Standard			Filled		
Contact type	Sliding contact, electronic			Magnetic snap-action contact, electronic		
Contact number	1	2	2 indipendent	1	2	2 indipendent
Junction box	3 poles + GND	3 poles + GND	6 poles + GND	6 poles + GND	6 poles + GND	6 poles + GND
ø exit cables: *inches* (mm)	*0,23...0,35* (6...9)	*0,23...0,35* (6...9)	*0,27...0,51* (7...13)	*0,27...0,51* (7...13)	*0,27...0,51* (7...13)	*0,27...0,51* (7...13)
Minimum range	*15 psi* (1bar)	*23 psi* (1,6 bar)	*23 psi* (1,6 bar)	*23 psi* (1,6 bar)	*36 psi* (2,5 bar)	*36 psi* (2,5 bar)

(1) Functional characteristics, electric diagrams and contact types are available on data-sheets :
"ELECTRIC CONTACTS", "ELECTRONIC CONTACTS"

OPTIONS

C -	Back flange, for lower connection pressure gauges
E -	Front flange, for back connection pressure gauges
E65 -	Protection IP 65 as per IEC 529, for standard model

"HOW TO ORDER" SEQUENCE

Section / Model /Case / Mounting / Diameter / Range / Process connection / Electric contact / Options

1	**M1**	**1**	**A**	**E**	**41M**	**01S...M9D**	**C, E**
		3	**D**		**43M**		**E65**

Copyright © Nuova Fima srl. All rights reserved. Any part of this publication should not be reproduced without a written Nuova Fima's srl approval

NUOVA FIMA USA Inc.
www.nuovafima.com - e-mail: infousa@nuovafima.com
4123 Hollister, Suite G - TX 77080 Houston
TEL. +1 713.690.9800 - FAX +1 713.690.9803

NUOVA FIMA srl
www.nuovafima.com - e-mail: info@nuovafima.com
P.O. BOX 58 - VIA C. BATTISTI 59 - 28045 INVORIO (NO) ITALY
TEL. +39 0322 253200 - FAX +39 0322 253232

IN ORDER TO IMPROVE THEIR PRODUCTION, MESSRS. NUOVA FIMA RESERVE THE RIGHT TO THEMSELVES TO MAKE ALL THE MODIFICATIONS THAT THEY DEEM INDISPENSABLE AT ANY TIME. UPDATED DATA-SHEETS ARE AVAILABLE ON SITE: www.nuovafima.com

MN14/10

pressure gauges with electric contacts
DS 4", 6" (100-150 mm)

Compliance to requirements of
LVD 2014/35/EU - PED 2014/68/EU

Alarm contacts are accessories with movable contacts in air, which open or close electric circuits depending of the position of the indicating pointer. They are used with Bourdon tube pressure gauges, bellows, diaphragm and thermometers of NUOVA FIMA production, in such way they become pressure and temperature switches: the optimal and sure solution to automatize any kind of equipment.

1.M7.1 - Standard Model

Ranges: *from 0...30 to 0...15000 psi* (from 0...1.6 to 0...1000 bar or equivalent units).
Mechanical contact: sliding contact, magnetic snap-action, electronic, inductive.
Accuracy: ± 1,0% as per EN 837-1 - DIN 16085 (1).
Ambient temperature: *-13...+149 °F* (-25...+65 °C).
Process fluid temperature: *max +149°F* (+65 °C).
Working pressure: max 75% of the full scale value.
Over pressure: not suitable.
Protection: IP 44 as per EN 60529/IEC 529.
Socket material: copper alloy .
Elastic element:
copper alloy for pressure ranges ≤ *580 psi* (40 bar);
AISI 316 L st.st. for pressure ranges ≥ *870 psi* (60 bar).
Case: stainless steel.
Ring: stainless steel, bayonet lock.
Window: plastic.
Movement: stainless steel.
Dial: aluminium, white with black markings.
Pointer: not adjustable, aluminium, black

(1) The addition of mechanical electric contacts affects the accuracy of instruments such that 1% becomes 1,5%, 1,6% becomes 2,4% etc. (add the 50% of accuracy; if the contact is of the magnetically assisted type, this value can't be added within the ±5% of setting point).

RC3 - 05/14

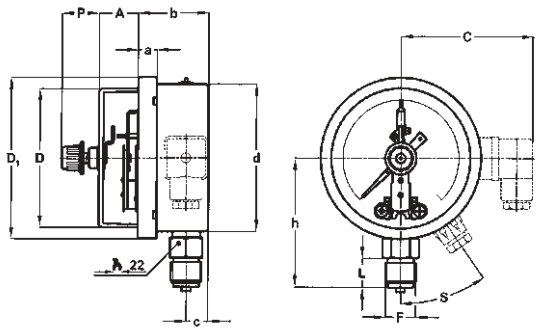

A - LOWER CONNECTION

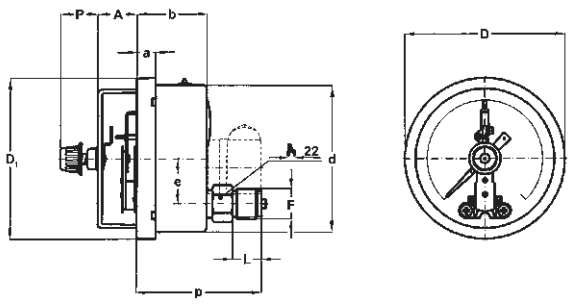

D - BACK CONNECTION

DS	Mounting	F	A (1)	a	b	C	c	D	D_1	d	e	h	L	P	p	S
E 4" (100)	Lower	41M G 1/2 A	1.06"...2.36" (27...60)	0.51" (13)	1.91" (48,5)	2.72" (69)	0.59" (15)	3.74" (95)	4.35" (110,6)	3.98" (101)		3.39" (86)	0.79" (20)	0.77" (19,6)		35°
	Back	43M 1/2-14 NPT									1.22" (31)				3.54" (90)	
G 6" (150)	Lower	41M G 1/2 A	1.02"...2.32" (26...59)	0.59" (15)	1.99" (50,5)	2.72" (69)	0.61" (15,5)	5.55" (141)	6.34" (161)	5,89 (149,6)		4.61" (117)	0.79" (20)	0.77" (19,6)		35°
	Back	43M 1/2-14 NPT									1.88" (47,8)				3.50" (89)	

dimensions : *inches* (mm)

(1) dimensions for single/double contact;

CONTACT TYPE (1)

MODEL	DS 4" (100 mm)			DS 6" (150 mm)		
Contact type	Sliding and magnetic snap-action contact			Sliding and magnetic snap-action contact		
Contact number	1	2	2 indipendent	1	2	2 indipendent
Junction box ø exit cables: *inches* (mm)	3 poles + GND *0,23...0,35* (6...9)	3 poles + GND *0,23...0,35* (6...9)		3 poles + GND *0,23...0,35* (6...9)	3 poles + GND *0,23...0,35* (6...9)	
Cable exit ø cable: *inches* (mm)	2 poles + GND (2) *0,19* (4,8)	3 poles + GND (2) *0,23* (6)	4 poles + 1 *0,27* (7)	2 poles + GND (2) *0,19* (4,8)	3 poles + GND (2) *0,23* (6)	4 poles + 1 *0,27* (7)
Minimum range	*15 psi* (1bar)	*23 psi* (1,6 bar)	*23 psi* (1,6 bar)	*15 psi* (1bar)	*23 psi* (1,6 bar)	*23 psi* (1,6 bar)

(1) Functional characteristics, electric diagrams and contact types are available on data-sheets : "ELECTRIC CONTACTS".

(2) U-clamp back connection pressure gauges only.

OPTIONS

Model	
B -	"U"-clamp, for back connection pressure gauges
C -	Back flange, for lower connection pressure gauges
E -	Front flange, for back connection pressure gauges
CH1 -	Removable key, protection IP 55

"HOW TO ORDER" SEQUENCE

Section / Model /Case / Mounting / Diameter / Range / Process connection / Electric contact / Options

1	M7	1	A	E	41M	01S...M9D	B, C, E
			D	G	43M		CH1

IN ORDER TO IMPROVE THEIR PRODUCTION, MESSRS. NUOVA FIMA RESERVE THE RIGHT TO THEMSELVES TO MAKE ALL THE MODIFICATIONS THAT THEY DEEM INDISPENSABLE AT ANY TIME. UPDATED DATA-SHEETS ARE AVAILABLE ON SITE: www.nuovafima.com

Copyright © Nuova Fima srl. All rights reserved. Any part of this publication should not be reproduced without a written Nuova Fima's srl approval

NUOVA FIMA USA Inc.
www.nuovafima.com - e-mail: infousa@nuovafima.com
4123 Hollister, Suite G - TX 77080 Houston
TEL. +1 713.690.9800 - FAX +1 713.690.9803

NUOVA FIMA srl
www.nuovafima.com - e-mail: info@nuovafima.com
P.O. BOX 58 - VIA C. BATTISTI 59 - 28045 INVORIO (NO) ITALY
TEL. +39 0322 253200 - FAX +39 0322 253232

MGS74

bourdon tube pressure gauges all stainless steel construction, with microswitch, DS 4" (100mm)

Compliance to requirements of LVD 2014/35/EU - PED 2014/68/EU

These instruments are designed for applications in the chemical, petrochemical industries, conventional power stations. They safety control the automatic regulation of hydraulic and pneumatic equipment.

1.74.1 - Standard Model

Design: EN837-1.
Safety designation: S1 as per EN 837-2.
Ranges: *from 0...15 to 0...10000 psi* (from 0...1 to 0...600 bar or equivalent units).
Accuracy: class 2,5 as per EN 837-1.
Ambient temperature: *-13...+149 °F* (-25...+65 °C).
Process fluid temperature: *-40...+302 °F* (-40...+150 °C).
Working pressure: max 75% of the FSV.
Overpressure: not suitable.
Protection degree: IP 44 as per EN 60529/IEC 529.
Electrical specifications: N. 1 SPDT microswitch.
Contact setting: between 10% and 75% of FSV.
Differential: fixed, between 2% and 4% of FSV.

Socket material: AISI 316L st.st.
Elastic element: AISI 316L st.st.
Case: stainless steel.
Ring: stainless steel, bayonet lock.
Window: plastic.
Movement: stainless steel.
Dial: aluminium, white with black markings.
Pressure pointer: aluminium, black.
Set pointer: aluminium, red.
Adjusting key: plastic, removable.
Junction box: glass fibre reinforced poliammid with cable exit ø *0.23...0.35"* (6...9 mm) as per EN 175301-803 (Ex DIN 43650).

MICROSWITCH: SETTING

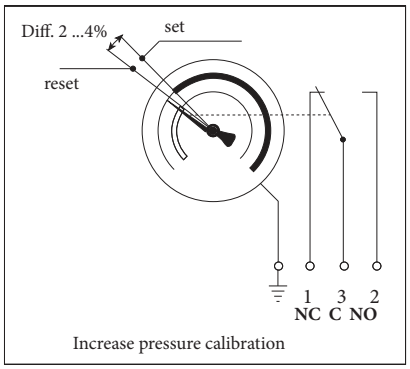

Increase pressure calibration

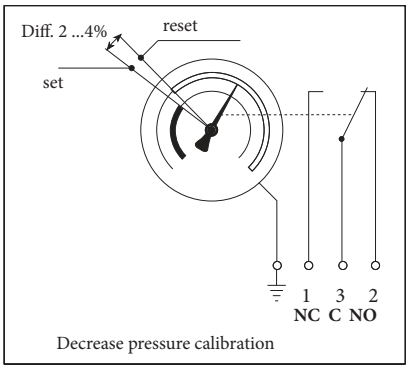

Decrease pressure calibration

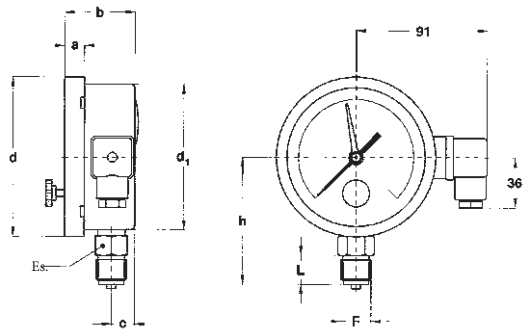

A - LOWER CONNECTION

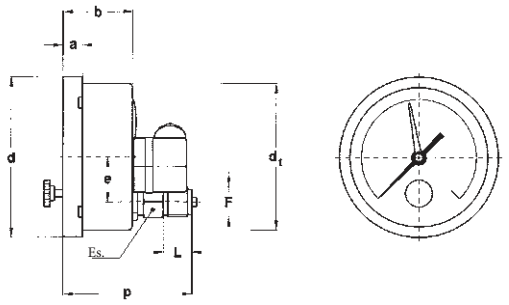

D - BACK CONNECTION

Mounting	F	a	b	c	d	d_1	e	h	p	L	Es.	Weight
Lower	41M - G 1/2 A	*0.51"* (13)	*1.90"* (48,5)	*0.62"* (16)	*4.35"* (110,6)	*3.97"* (101)		*3.48"* (88,5)		*0.78"* (20)	*0.86"* (22)	*1.32 lbs* (0,6 kg)
Back							*1.22"* (31)		*3.65"* (90)			

dimensions : *inches* (mm)

RATING LOAD

Volt	DC	AC	Inductive load
220	0,3 A	4 A	4 A
110	0,4 A	4 A	4 A
48	4 A	4 A	4 A
24	4 A	4 A	4 A

WIRING

Wiring	Junction box	Cable
NC	Contact N.°1	Brown
NO	Contact N.°2	Black
C	Contact N.°3	Blue
Ground	Ground	Yellow-Green

OPTIONS

RSV -	Under-glass adjusting (IP 55 protection degree)
D30 -	Differential between 6% and 10% of FSV (for ranges ≥ *60 psi* - 2,5 bar)
S06 -	Brass restrictor ø *0.015"* (0,4 mm) for ranges ≤ *600 psi* (40 bar)
T40 -	Calibration for pressure decrease

"HOW TO ORDER" SEQUENCE

Section / Model / Case / Mounting / Diameter / Range / Process connection / Options

1	74	1	A	E	41M	RSV...T40
			D			

IN ORDER TO IMPROVE THEIR PRODUCTION, MESSRS. NUOVA FIMA RESERVE THE RIGHT TO THEMSELVES TO MAKE ALL THE MODIFICATIONS THAT THEY DEEM INDISPENSABLE AT ANY TIME. UPDATED DATA-SHEETS ARE AVAILABLE ON SITE: www.nuovafima.com

Copyright © Nuova Fima srl. All rights reserved. Any part of this publication should not be reproduced without a written Nuova Fima's srl approval

NUOVA FIMA USA Inc.
www.nuovafima.com - e-mail: infousa@nuovafima.com
4123 Hollister, Suite G - TX 77080 Houston
TEL. +1 713.690.9800 - FAX +1 713.690.9803

NUOVA FIMA srl
www.nuovafima.com - e-mail: info@nuovafima.com
P.O. BOX 58 - VIA C. BATTISTI 59 - 28045 INVORIO (NO) ITALY
TEL. +39 0322 253200 - FAX +39 0322 253232

MCE18

pressure gauges with electric contacts
all stainless steel construction
DS 4" (100mm)

Compliance to requirements of
LVD 2014/35/EU - PED 2014/68/EU

They are used to control the electrical operation of compressors, pumps, presses, hydraulic and pneumatics equipment, chemical and petrochemical plant. The contacts open or close the circuit depending on the position of the indicating pointer and they are adjustable over the whole range. For application on severe working conditions, such as rapid and frequent pressure change, vibration and pulsation, they are manufactured with the case liquid filled. The filling drastically reduces the effect of such factors as well as those caused by a corrosive atmosphere, giving longer life and better performances of the pressure gauge and their electric contacts. They are also available with inductive contacts intrinsecally safe.

1.M2.1 - Standard Model

Ranges: *from 0...15 to 0...20000 psi* (from 0...1 to 0...1600 bar or equivalent units).
Mechanical contact: sliding contact, magnetic snap-action, electronic, inductive.
Accuracy: ± 1,0% as per EN 837-1 - DIN 16085 (1).
Ambient temperature: *-13...+149 °F* (-25...+65 °C).
Process fluid temperature: *max +212 °F* (+100 °C).
Working pressure: max 75% of the full scale value.
Over pressure: not suitable.
Protection: IP 55 as per EN 60529/IEC 529.
Socket material: AISI 316L st.st.
Elastic element: AISI 316L st.st.
Case: stainless steel.
Ring: stainless steel, bayonet lock.
Window: plastic.
Movement: stainless steel.
Dial: aluminium, white with black markings.
Pointer: not adjustable, aluminium, black.

1.M2.3 - Filled Model

Mechanical contact: magnetic snap-action, electronic, inductive.
Accuracy: ± 1,6% as per EN 837-1 - DIN 16085 (1).
Process fluid temperature: *max +149 °F* (+65 °C).
Filling liquid: silicon oil.
Protection: IP 65 as per EN 60529/IEC 529.
Other features: as Standard Model.

(1) The addition of mechanical electric contacts affects the accuracy of instruments such that 1% becomes 1,5%, 1,6% becomes 2,4% etc. (add the 50% of accuracy; if the contact is of the magnetically assisted type, this value can't be added within the ±5% of setting point).

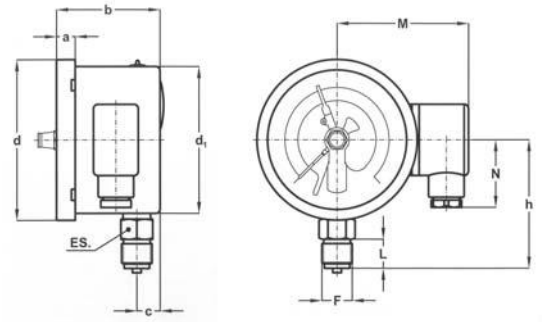

A - LOWER CONNECTION

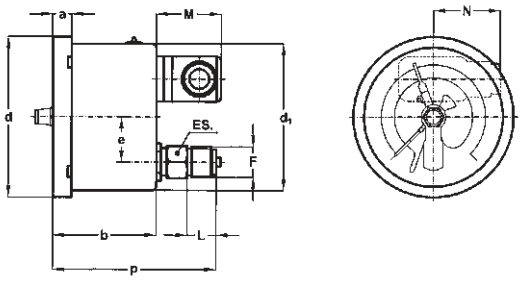

D - BACK CONNECTION

Mounting	F	a	b (1)	c	d	d_1	e	h	p (1)	N	L	ch	Weight (2)
Lower	**41M** G 1/2 A	*0.51"* (13)	*2.81"- 3.24"* (71,5 - 82,5)	*0.63"* (16.1)	*4.35"* (110,6)	*3.97"* (101)		*3.48"* (88,5)		*1.81"* (46)	*0.78"* (20)	*0.86"* (22)	*1.54 lbs* (0,7 kg)
Back	**43M** 1/2-14 NPT						*1.22"* (31)		*4.44" - 4.87"* (112,9 - 123,9)				

dimensions : *inches* (mm)

(1) dimensions for single/double contact;
(2) when filled, add *0.77 lbs* (0,35 kg) for single contact and *0.88 lbs* (0,4 kg) for double contact

CONTACT TYPE (1)

MODEL	Standard			Filled		
Contact type	Sliding contact, electronic			Magnetic snap-action contact, electronic		
Contact number	1	2	2 indipendent	1	2	2 indipendent
Junction box	3 poles + GND	3 poles + GND	6 poles + GND	6 poles + GND	6 poles + GND	6 poles + GND
ø exit cables: *inches* (mm)	*0,23...0,35* (6...9)	*0,23...0,35* (6...9)	*0,27...0,51* (7...13)	*0,27...0,51* (7...13)	*0,27...0,51* (7...13)	*0,27...0,51* (7...13)
Minimum range	*15 psi* (1bar)	*23 psi* (1,6 bar)	*23 psi* (1,6 bar)	*23 psi* (1,6 bar)	*36 psi* (2,5 bar)	*36 psi* (2,5 bar)

(1) Functional characteristics, electric diagrams and contact types are available on data-sheets :
"ELECTRIC CONTACTS", "ELECTRONIC CONTACTS"

OPTIONS

	ATEX version, with intrinsic safety inductive contact (1)
C -	Back flange, for lower connection pressure gauges
E -	Front flange, for back connection pressure gauges
E65 -	Protection IP 65 as per IEC 529, for standard model

(1) See ATEX data-sheet for technical details

"HOW TO ORDER" SEQUENCE

Section / Model /Case / Mounting / Diameter / Range / Process connection / Electric contact / Options

1	**M2**	**1**	**A**	**E**	**41M**	**01S...M9D**	**C, E**
		3	**D**		**43M**	**E1...B22**	**E65**

Copyright © Nuova Fima srl. All rights reserved. Any part of this publication should not be reproduced without a written Nuova Fima's srl approval

NUOVA FIMA USA Inc.
www.nuovafima.com - e-mail: infousa@nuovafima.com
4123 Hollister, Suite G - TX 77080 Houston
TEL. +1 713.690.9800 - FAX +1 713.690.9803

NUOVA FIMA srl
www.nuovafima.com - e-mail: info@nuovafima.com
P.O. BOX 58 - VIA C. BATTISTI 59 - 28045 INVORIO (NO) ITALY
TEL. +39 0322 253200 - FAX +39 0322 253232

IN ORDER TO IMPROVE THEIR PRODUCTION, MESSRS. NUOVA FIMA RESERVE THE RIGHT TO THEMSELVES TO MAKE ALL THE MODIFICATIONS THAT THEY DEEM INDISPENSABLE AT ANY TIME. UPDATED DATA-SHEETS ARE AVAILABLE ON SITE: www.nuovafima.com

MCE20

pressure gauges with electric contacts
all stainless steel construction
DS 6" (150mm)

Compliance to requirements of
LVD 2014/35/EU - PED 2014/68/EU

These instruments are manufactured in accordance with the safety norms prescribed by **UNI 8541**, **DIN 16006** e **ANSI B40.1**. They are used to control the electrical operation of compressors, pumps, presses, hydraulic and pneumatic equipments, chemical and petrochemical plant. In the event of leakage or break of sensing element, the operator is protected by a solid baffle wall placed on the instrument front and by the rear blow out wall. The contacts open or close the circuit depending on the position of the indicating pointer and they are adjustable over the whole range. For application on severe working conditions, such as rapid and frequent pressure change, vibration and pulsation, they are manufactured with the case liquid filled. The filling drastically reduce the effects of such factors as well as those caused by the corrosive atmosphere, making longer life and better performances of the pressure gauge and their electric contacts. They are also available with inductive contacts intrinsically safe.

1.M3.1 - Standard Model

Ranges: *from 0...15 to 0...20000 psi* (from 0...1 to 0...1600 bar or equivalent units).
Mechanical contact: sliding contact, magnetic snap-action, electronic, inductive.
Accuracy: ± 1,0 % as per EN 837-1 - DIN 16085 (1).
Ambient temperature: *-13...+149 °F* (-25...+65 °C).
Process fluid temperature: *max +212 °F* (+100 °C).
Working pressure: max 75% of the full scale value.
Over pressure: not suitable.
Protection: IP 55 as per EN 60529/IEC 529.
Socket material: AISI 316L st.st.
Elastic element: AISI 316L st.st.
Case: stainless steel.
Ring and blow out disk: stainless steel.
Window: plastic.
Movement: stainless steel.
Dial: aluminium, white with black markings.
Pointer: not adjustable, aluminium, black.

1.M3.3 - Filled Model, Lower connection only

Mechanical contact: magnetic snap-action.
Accuracy: ± 1,6% as per EN 837-1 - DIN 16085 (1).
Process fluid temperature: *max +149 °F* (+65 °C).
Protection: IP 65 as per EN 60529/IEC 529.
Filling liquids: silicone dielectric oil.
Other features: as Standard Model.

(1) The addition of mechanical electric contacts affects the accuracy of instruments such that 1% becomes 1,5%, 1,6% becomes 2,4% etc. (add the 50% of accuracy; if the contact is of the magnetically assisted type, this value can't be added within the ±5% of setting point).

ISO 9001 : 2008
Cert. nr. 0433/6

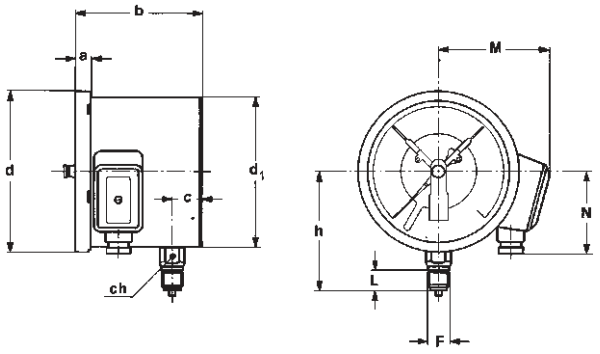

A - LOWER CONNECTION

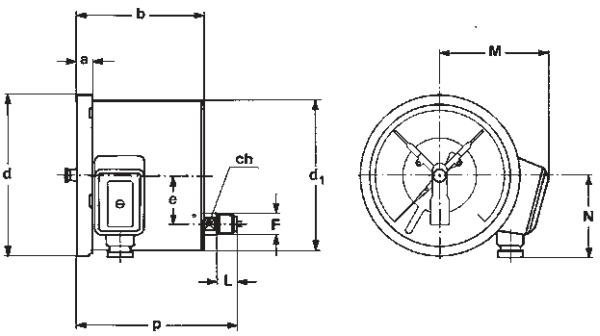

D - BACK CONNECTION

Mounting	F	a	b	c	d	d_1	e	h	p	M	N	L	ch	Weight (1)
Lower	41M G 1/2 A	*0.59"* (15)	*5"* (127)	*1.18"* (30)	*6.34"* (161)	*5.89"* (149,5)		*4.65"* (118)		*4.33"* (110)	*3.27"* (83)	*0.78"* (20)	*0.94"* (24)	*3.19 lbs* 1,45 kg)
Back							*1.88"* (47,8)		*6,30"* (160)				*0.67"* (17)	*3.08 lbs* (1,4 kg)

dimensions : *inches* (mm)

(1) when filled, add *3.63 lbs* (1,65 kg)

CONTACT TYPE (1)

MODEL	Standard		Filled	
Contact type	Sliding contact		Magnetic snap-action contact	
Contact number	1	2	1	2
Junction box	4 poles + GND	4 poles + GND	4 poles + GND	4 poles + GND
ø exit cables: *inches* (mm)	*0,35...0,55* (9...14)	*0,35...0,55* (9...14)	*0,35...0,55* (9...14)	*0,35...0,55* (9...14)
Minimum range	*15 psi* (1bar)	*23 psi* (1,6 bar)	*23 psi* (1,6 bar)	*36 psi* (2,5 bar)

(1) Functional characteristics, electric diagrams and contact types are available on data-sheets : "ELECTRIC CONTACTS".

OPTIONS

C -	Back flange, for lower connection pressure gauges
P02 -	Oxygen service
E65 -	Protection IP 65 as per IEC 529, for standard model

"HOW TO ORDER" SEQUENCE

Section / Model /Case / Mounting / Diameter / Range / Process connection / Electric contact / Options

Section	Model	Case	Mounting	Diameter	Range	Process connection	Electric contact	Options
1	M3	1	A	G		41M	01S...M9D	C
		3	D					P02, E65

Copyright © Nuova Fima srl. All rights reserved. Any part of this publication should not be reproduced without a written Nuova Fima's srl approval

NUOVA FIMA USA Inc.
www.nuovafima.com - e-mail: infousa@nuovafima.com
4123 Hollister, Suite G - TX 77080 Houston
TEL. +1 713.690.9800 - FAX +1 713.690.9803

NUOVA FIMA srl
www.nuovafima.com - e-mail: info@nuovafima.com
P.O. BOX 58 - VIA C. BATTISTI 59 - 28045 INVORIO (NO) ITALY
TEL. +39 0322 253200 - FAX +39 0322 253232

IN ORDER TO IMPROVE THEIR PRODUCTION, MESSRS. NUOVA FIMA RESERVE THE RIGHT TO THEMSELVES TO MAKE ALL THE MODIFICATIONS THAT THEY DEEM INDISPENSABLE AT ANY TIME. UPDATED DATA-SHEETS ARE AVAILABLE ON SITE: www.nuovafima.com

MCE10-18/SF6

Pressure gauges for SF_6 gas monitoring DS 4" (100 mm)

Compliance to requirements of LVD 2014/35/EU - PED 2014/68/EU

These instruments are manufactured to monitor the electrical operations on hermetically sealed systems containing Sulphur Hexafluoride gas (SF_6). The indication and the electrical operations are calibrated to the gas density (isochore) according to the relation pressure-temperature. The M5 model is suitable for indoor installation while the M6 model has been designed for the outdoor installation as well. The oil filled executions are particularly suitable for installation when vibrations are apparent.

Accuracy of indication (referred to the instruments range):
±1% at +20 °C of ambient temperature; ±2,5% within the temperature range -20...+60°C related to the calibration pressure of the reference isochore.
Accuracy of intervention:
- see accuracy of indication for set-point equal to pressure of calibration;
- when set-point is different from pressure of calibration, calculate it according to the instrument range.

Alarm contacts, non adjustable contacts, with antitampering sealing:
- on air with magnetic block (80%Ag-20%Ni);
- inductive with galvanic exit.

Ambient temperature: -20...+60 °C.
Storage temperature: -40...+60°C
Calibration pressure (PC): refer to order specifications.
Ranges: also vacuum & compound gauges from 1,6 to 25 bar.
Electrical connection: junction box with cable gland M20 x 1,5.

Nominal diameter: DN100.
Gas seal: leakage rate ≤ $1x10^{-6}$ mbar x l/s^{-1} (helium test with mass spectrometer).
Case: AISI 304.
Ring: bayonet lock, AISI 304 with antitampering sealing.
Window: glass.
Movement: stainless steel with bimetallic temperature compensator.
Dial: white aluminium with black markings and coloured sectors as per customer's specification.
Pointer: black anodised aluminium.

1.M5 - MCE10/SF6 : copper alloy wetted parts , suitable for indoor ambients

1 - Standard dry version

Process connection: OT58.
Sensing element: phosphor bronze.
Protection degree: IP 54 as per IEC 529, UNI 8896.

3 - Silicon oil filled version

Process connection: OT58.
Sensing element: phosphor bronze.
Protection degree: IP65 as per IEC 529, UNI 8896.
Window: safety glass.

1.M6 - MCE18/SF6 : AISI 316L wetted parts, suitable for outdoor ambients

1 - Standard dry version

Process connection and sensing element: AISI 316L.
Protection degree: IP 54 as per IEC 529, UNI 8896.

3 - Silicon oil filled version

Process connection and sensing element: AISI 316L.
Protection degree: IP 65 as per IEC 529, UNI 8896.
Window: safety glass.

9 - Nitrogen filled version

Process connection and sensing element: AISI 316L.
Protection degree: IP 65 as per IEC 529, UNI 8896.
Window: safety glass.

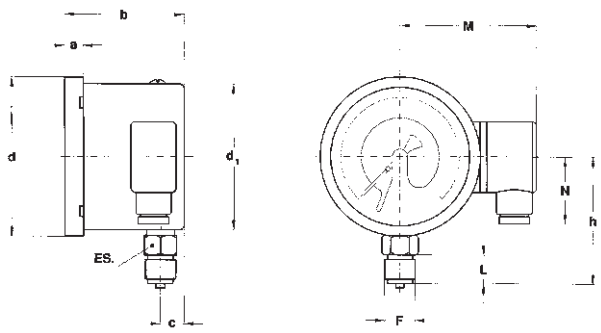

A
stem mounting;
lower connection.

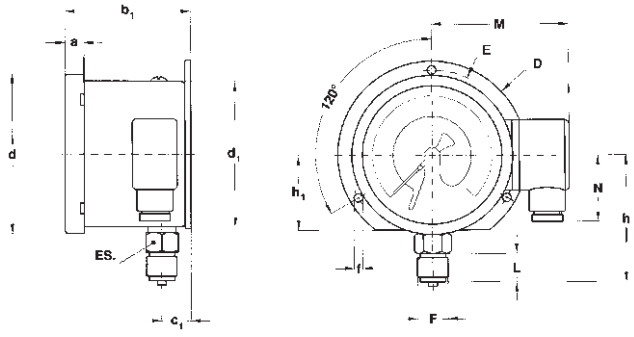

A + C
surface mounting, back flange;
lower connection.

Type	F	a	b (1)	c	d	d_1	f	h	h_1	D	E	M	N	L	ES	Weight (1)(2)
A	**41M** G 1/2 A	*0.51"* (13)	*2.87/3.27"* (73/83)	*0.63"* (16)	*4.33"* (110)	*3.98"* (101)		*3.50"* (89)				*3.70"* (94)	*1.81"* (46)	*0.79"* (20)	*0.87"* (22)	*1.45/1.65 lbs* (0,66/0,75 kg)
A+C	**43M** 1/2-14 NPT	*0.51"* (13)	*3.03/3.43"* (77/87)	*0.79"* (20)	*4.33"* (110)	*3.98"* (101)	*0.24"* (6)	*3.50"* (89)	*2.05"* (52)	*5.12"* (130)	*4.65"* (118)	*3.70"* (94)	*1.81"* (46)	*0.79"* (20)	*0.87"* (22)	*1.63/1.83 lbs* (0,74/0,83 kg)

dimensions : *inches* (mm)

(1) dimensions for single or double contacts; (2) add 0.88 lbs (0,4 kg), when glycerine filled

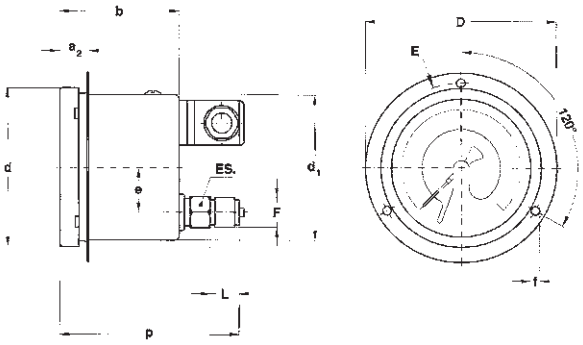

D + E
flush mounting, front flange 3 holes;
back connection.

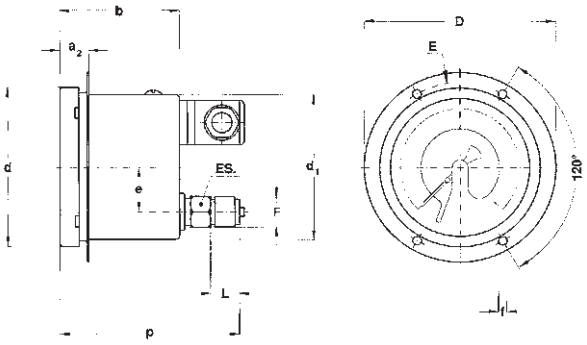

D + Q
flush mounting, front flange 4 holes;
back connection.

Type	F	a_2	b (1)	d	d_1	e	f	p (1)	D	E	L	ES	Weight (1)(2)
D+E	**41M** G 1/2 A	*0.79"* (20)	*2.87/3.27"* (73/83)	*4.33"* (110)	*3.98"* (101)	*1.22"* (31)	*0.24"* (6)	*4.49/4.88"* (114/124)	*5.20"* (132)	*4.65"* (118)	*0.79"* (20)	*0.87"* (22)	*1.41/1.61 lbs* (0,64/0,73 kg)
D+Q	**43M** 1/2-14 NPT	*0.79"* (20)	*2.87/3.27"* (73/83)	*4.33"* (110)	*3.98"* (101)	*1.22"* (31)	*0.24"* (6)	*4.49/4.88"* (114/124)	*5.20"* (132)	*4.65"* (118)	*0.79"* (20)	*0.87"* (22)	*1.41/1.61 lbs* (0,64/0,73 kg)

dimensions : *inches* (mm)

(1) dimensions for single or double contacts; (2) add 0.88 lbs (0,4 kg), when glycerine filled

Magnetic snap action contacts

Set-point hysteresys: 2...5% f.s.v.
Break rating: 30W/50VA (20W/20VA if filled).
Maximum rating: 250Vca/1A (ohmic load).

Minimum rating: 24 Vcc/20 mA (ohmic rating).
Contact material: Silver-Nickel 80/20%.
Electrical wiring: with junction box as per VDE, see table page 4.

LOAD RATINGS, as per DIN 16085.

Volt	Dry versions or filled with azote			Silicon dielectric oil filled versions		
	CC	CA	Inductive load	CC	CA	Inductive load
220	100 mA	120 mA	65 mA	65 mA	90 mA	40 mA
110	200 mA	240 mA	130 mA	130 mA	180 mA	85 mA
48	300 mA	450 mA	200 mA	190 mA	330 mA	130 mA
24	400 mA	600 mA	250 mA	250 mA	450 mA	150 mA

WIRING SCHEME (The numbers shown are the same as those are indicated on the junction box)	THE PRESSURE RAISING MEANS...	CONTACT CODE
	...FOR SINGLE CONTACTS	
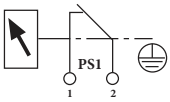	**Opening PS1**	01S
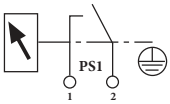	**Closing PS1**	02S
	... FOR DOUBLE CONTACTS	
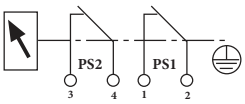	**Opening PS1** **Opening PS2** (each contact must not exceed the next one)	06D
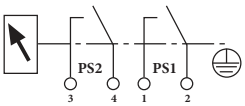	**Closing PS1** **Closing PS2** (each contact must not exceed the next one)	09D

RANGES

bar	-1...+0,6	-1...+1,5	-1...+3	-1...+5	-1...+9	-1...+15	-1...+24
MPa	-0,1...+0,06	-0,1...+0,15	-0,1...+0,3	-0,1...+0,5	-0,1...+0,9	-0,1...+1,5	-0,1...+2,4

RECOMMENDATION

The measuring of the temperature necessary to the termic compensation it is detected inside the instrument. This means that these instruments should be installed so that their operating temperature corresponds to the one of the monitored SF_6 gas.

In order to avoid any compensating error due to the different isochores, the **PC** calibration must be as nearest as possible to the **PS** contacts setting pressure.

HOW TO ORDER

1° - DESCRIPTION & CODE

Model
1.M5 - MCE 10 SF6, for indoor ambients
1.M6 - MCE 18 SF6, for outdoor ambients

Version
1 - Standard, dry
3 - Filled with silicon dielectric oil version
9 - Filled with azote oil version

Mounting type
A - lower connection - stem mounting
D - back connection - front flange 3 holes

Technical specification code
To be asked to the Technical & Commercial Service

Ranges : from 1,6 to 25 bar, also vacuum and compound

Process connection
41M - 1/2" BSP - G 1/2 A - PF 1/2
43M - 1/2" NPT

Electric schemes : 01S...09D - see tabels on page 3

Mounting accessories
C - Back flange, for lower connection pressure gauge
E - 3 holes front flange, for back connection pressure gauge
Q - 4 holes front flange, for back connection pressure gauge

2° - CALIBRATION FEATURES

PF - nominal pressure of the circuit filling

PC - calibration pressure, which identifies the reference isochore

PS1 - setting pressure of the contact PS1, on the temperature of SF_6 gas of 20°C

...and if the contacts are two

PS2 - setting pressure of the contactPS2, on the temperature of SF_6 gas of 20°C

3° - DIAL LAYOUT

1° : red sector range

2° : orange sector range

3° : green sector range

IN ORDER TO IMPROVE THEIR PRODUCTION, MESSRS. NUOVA FIMA RESERVE THE RIGHT TO THEMSELVES TO MAKE ALL THE MODIFICATIONS THAT THEY DEEM INDISPENSABLE AT ANY TIME. UPDATED DATA-SHEETS ARE AVAILABLE ON SITE: **www.nuovafima.com**

Copyright © Nuova Fima srl. All rights reserved. Any part of this publication should not be reproduced without a written Nuova Fima's srl approval

NUOVA FIMA USA Inc.
www.nuovafima.com - e-mail: infousa@nuovafima.com
4123 Hollister, Suite G - TX 77080 Houston
TEL. +1 713.690.9800 - FAX +1 713.690.9803

NUOVA FIMA srl
www.nuovafima.com - e-mail: info@nuovafima.com
P.O. BOX 58 - VIA C. BATTISTI 59 - 28045 INVORIO (NO) ITALY
TEL. +39 0322 253200 - FAX +39 0322 253232

MN14/18

pressure gauges with electric contacts
all stainless steel execution
DS 4", 6" (100-150 mm)

Compliance to requirements of
LVD 2014/35/EU - PED 2014/68/EU

Alarm contacts are accessories with movable contacts in air, which open or close electric circuits depending of the position of the indicating pointer. They are used with Bourdon tube pressure gauges, bellows, diaphragm and thermometers of NUOVA FIMA production, in such way they become pressure and temperature switches: the optimal and sure solution to automatize any kind of equipment.

1.M8.1 - Standard Model

Ranges: *from 0...15 to 0...20000 psi* (from 0...1 to 0...1600 bar or equivalent units).
Mechanical contact: sliding contact, magnetic snap-action, electronic, inductive.
Accuracy: ± 1,0% as per EN 837-1 - DIN 16085 (1).
Ambient temperature: *-13...+149 °F* (-25...+65 °C).
Process fluid temperature: *max +212°F* (+100 °C).
Working pressure: max 75% of the full scale value.
Over pressure: not suitable.
Protection: IP 44 as per EN 60529/IEC 529.
Socket material: AISI316L st.st.
Elastic element: AISI316L st.st.
Case: stainless steel.
Ring: stainless steel, bayonet lock.
Window: plastic.
Movement: stainless steel.
Dial: aluminium, white with black markings.
Pointer: not adjustable, aluminium, black

(1) The addition of mechanical electric contacts affects the accuracy of instruments such that 1% becomes 1,5%, 1,6% becomes 2,4% etc. (add the 50% of accuracy; if the contact is of the magnetically assisted type, this value can't be added within the ±5% of setting point).

RG3 - 05/14

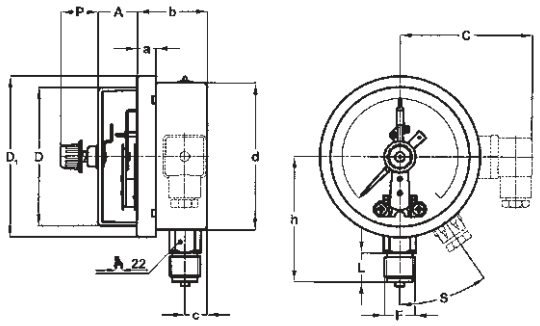

A - LOWER CONNECTION

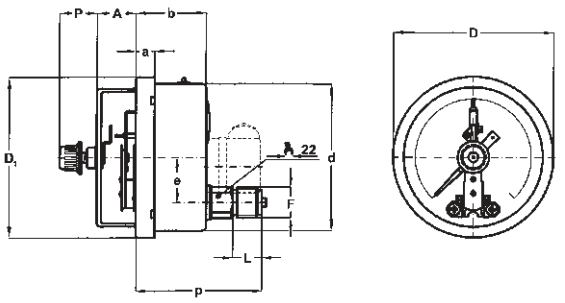

D - BACK CONNECTION

DS	Mounting	F	A (1)	a	b	C	c	D	D_1	d	e	h	L	P	p	S
E 4" (100)	**Lower**	**41M** G 1/2 A	*1.06"...2.36"* (27...60)	*0.51"* (13)	*1.91"* (48,5)	*2.72"* (69)	*0.59"* (15)	*3.74"* (95)	*4.35"* (110,6)	*3.98"* (101)		*3.39"* (86)	*0.79"* (20)	*0.77"* (19,6)		35°
	Back	**43M** 1/2-14 NPT									*1.22"* (31)				*3.54"* (90)	
G 6" (150)	**Lower**	**41M** G 1/2 A	*1.02"...2.32"* (26...59)	*0.59"* (15)	*1.99"* (50,5)	*2.72"* (69)	*0.61"* (15,5)	*5.55"* (141)	*6.34"* (161)	*5,89* (149,6)		*4.61"* (117)	*0.79"* (20)	*0.77"* (19,6)		35°
	Back	**43M** 1/2-14 NPT									*1.22"* (31)				*3.50"* (89)	

dimensions : *inches* (mm)

(1) dimensions for single/double contact;

CONTACT TYPE (1)

MODEL	DS *4"* (100 mm)			DS *6"* (150 mm)		
Contact type	Sliding and magnetic snap-action contact			Sliding and magnetic snap-action contact		
Contact number	1	2	2 indipendent	1	2	2 indipendent
Junction box ø exit cables: *inches* (mm)	3 poles + GND *0,23...0,35* (6...9)	3 poles + GND *0,23...0,35* (6...9)		3 poles + GND *0,23...0,35* (6...9)	3 poles + GND *0,23...0,35* (6...9)	
Cable exit ø cable: *inches* (mm)	2 poles + GND (2) *0,19* (4,8)	3 poles + GND (2) *0,23* (6)	4 poles + 1 *0,27* (7)	2 poles + GND (2) *0,19* (4,8)	3 poles + GND (2) *0,23* (6)	4 poles + 1 *0,27* (7)
Minimum range	*15 psi* (1bar)	*23 psi* (1,6 bar)	*23 psi* (1,6 bar)	*15 psi* (1bar)	*23 psi* (1,6 bar)	*23 psi* (1,6 bar)

(1) Functional characteristics, electric diagrams and contact types are available on data-sheets : "ELECTRIC CONTACTS".

(2) U-clamp back connection pressure gauges only.

OPTIONS

B -	"U"-clamp, for back connection pressure gauges
C -	Back flange, for lower connection pressure gauges
E -	Front flange, for back connection pressure gauges
CH1 -	Removable key, protection IP 55

"HOW TO ORDER" SEQUENCE

Section / Model /Case / Mounting / Diameter / Range / Process connection / Electric contact / Options

1	**M8**	**1**	**A**	**E**	**41M**	**01S...M9D**	**B, C, E**
			D	**G**	**43M**		**CH1**

Copyright © Nuova Fima srl. All rights reserved. Any part of this publication should not be reproduced without a written Nuova Fima's srl approval

IN ORDER TO IMPROVE THEIR PRODUCTION, MESSRS. NUOVA FIMA RESERVE THE RIGHT TO THEMSELVES TO MAKE ALL THE MODIFICATIONS THAT THEY DEEM INDISPENSABLE AT ANY TIME. UPDATED DATA-SHEETS ARE AVAILABLE ON SITE: www.nuovafima.com

NUOVA FIMA USA Inc.
www.nuovafima.com - e-mail: infousa@nuovafima.com
4123 Hollister, Suite G - TX 77080 Houston
TEL. +1 713.690.9800 - FAX +1 713.690.9803

NUOVA FIMA srl
www.nuovafima.com - e-mail: info@nuovafima.com
P.O. BOX 58 - VIA C. BATTISTI 59 - 28045 INVORIO (NO) ITALY
TEL. +39 0322 253200 - FAX +39 0322 253232

MS1

standard version : DS 1.5", 2" (40-50mm)

RANGES	bar	kPa	MPa
0...1			AB
0...1,6			AB
0...2,5	AB		AB
0...4	AB		AB
0...6	AB		B
0...10	AB		B
0...16	AB		B
0...25	AB		B
0...40	AB		B
0...60	B		
0...100	B		
0...160	B		
0...250	B	AB	
0...400	B	AB	
0...600		AB	
0...1000		AB	
0...1600		AB	
0...2500		AB	

"A" = DS *1.5*"(40mm); "B" = DS *2*" (50mm).

standard version : DS 6" (150mm)

RANGES	bar (1)	kPa	MPa	bar ext.
				psi int.
0...1	◆		◆	◆
0...1,6	◆		◆	◆
0...2,5	◆		◆	◆
0...4	◆		◆	◆
0...6	◆		◆	◆
0...10	◆		◆	◆
0...16	◆		◆	◆
0...25	◆		◆	◆
0...40	◆		◆	◆
0...60	◆	◆	◆	◆
0...100	◆	◆	◆	◆
0...160	◆	◆		◆
0...250	◆	◆		◆
0...400	◆	◆		◆
0...600	◆	◆		◆
0...1000	◆	◆		◆
0...1600		◆		
0...2500		◆		

(1) available also kg/cm^2

RANGES	psi	psi int.
		kPa ext.
0...15	◆	◆
0...30	◆	◆
0...60	◆	◆
0...100	◆	◆
0...160	◆	◆
0...200	◆	◆
0...300	◆	◆
0...400	◆	◆
0...600	◆	◆
0...800	◆	◆
0...1000	◆	◆
0...1500	◆	◆
0...2000	◆	◆
0...3000	◆	◆
0...4000	◆	◆
0...5000	◆	◆
0...6000	◆	◆
0...10000	◆	◆
0...15000	◆	◆

RANGES	bar	kPa	bar ext.
			psi int.*
-1...0	◆		◆
-1...0,6	◆		◆
-1...1,5	◆		◆
-1...3	◆		◆
-1...5	◆		◆
-1...9	◆		◆
-1...15	◆		◆
-1...24	◆		◆
-100...0		◆	
-100...150		◆	
-100...300		◆	
-100...500		◆	
-100...900		◆	
-100...1500		◆	

* vacuum measurement unit : "inHg"

RANGES	psi*	psi int.*
		kPa ext.
-30...0	◆	◆
-30...15	◆	◆
-30...30	◆	◆
-30...150	◆	

* vacuum measurement unit : "inHg"

MS2

standard version : DS 1.5", 2", 2.5" (40-50-63mm)

RANGES	bar
-1...0	C
0...1	C
0...1,6	C
0...2,5	ABC
0...4	ABC
0...6	ABC
0...10	ABC
0...16	ABC
0...25	ABC
0...40	ABC

RANGES	psi
0...15	C
0...30	ABC
0...60	ABC
0...100	ABC
0...160	ABC
0...200	ABC
0...300	ABC
0...400	ABC
0...500	ABC
0...600	ABC

"A" = DS *1.5*"(40mm); "B" = DS *2*" (50mm); "C" = DS *2.5*"(63mm).

case painted stainless steel : DS 1.5", 2", 2.5" (40-50-63mm)

MS3-MS7

RANGES	bar
-1...0	C
0...1	C
0...1,6	C
0...2,5	ABC
0...4	ABC
0...6	ABC
0...10	ABC
0...16	ABC
0...25	ABC
0...40	ABC
0...60	ABC
0...100	ABC
0...160	ABC
0...250	ABC

RANGES	psi
0...15	C
0...30	ABC
0...60	ABC
0...100	ABC
0...160	ABC
0...200	ABC
0...300	ABC
0...400	ABC
0...500	ABC
0...600	ABC
0...1000	ABC
0...1500	ABC
0...2000	ABC
0...3000	ABC

"A" = DS *1.5*"(40mm); "B" = DS *2*" (50mm); "C" = DS *2.5*"(63mm).

anti-vibration version : DS 4" (100mm)

MS4

RANGES	bar (1)	kPa	MPa	bar ext.	bar ext.	bar ext.
				psi int.	kPa int.	MPa int.
0...1	◆		◆	◆	◆	
0...1,6	◆		◆	◆	◆	
0...2,5	◆		◆	◆	◆	
0...4	◆		◆	◆	◆	
0...6	◆		◆	◆	◆	
0...10	◆		◆	◆		◆
0...16	◆		◆	◆		◆
0...25	◆		◆	◆		◆
0...40	◆		◆	◆		◆
0...60	◆		◆	◆		◆
0...100	◆	◆	◆	◆		◆
0...160	◆	◆		◆		◆
0...250	◆	◆		◆		◆
0...300	◆					
0...400	◆	◆		◆		◆
0...600	◆	◆		◆		◆
0...1000	◆	◆		◆		◆
0...1600		◆				
0...2500		◆				

(1) Available also kg/cm^2

RANGES	psi	psi ext.	psi ext.
		bar int.	kg/cm ^{2} int.
0...15	◆	◆	◆
0...30	◆	◆	◆
0...60	◆	◆	◆
0...100	◆	◆	◆
0...160	◆	◆	◆
0...200	◆	◆	◆
0...300	◆	◆	◆
0...400	◆	◆	◆
0...600	◆	◆	◆
0...1000	◆	◆	◆
0...1500	◆	◆	◆
0...2000	◆	◆	◆
0...3000	◆	◆	◆
0...4000	◆	◆	◆
0...5000	◆	◆	◆
0...6000	◆	◆	◆
0...10000	◆	◆	◆
0...15000	◆	◆	◆

RANGES	bar	kPa	bar ext.	bar ext.
			psi int.*	kPa int.
-1...0	◆		◆	◆
-1...0,6	◆		◆	◆
-1...1,5	◆		◆	◆
-1...3	◆		◆	◆
-1...5	◆		◆	◆
-1...9	◆		◆	◆
-1...15	◆		◆	◆
-1...24	◆		◆	◆
-100...0		◆		
-100...150		◆		
-100...300		◆		
-100...500		◆		
-100...900		◆		
-100...1500		◆		
-100...2400		◆		

* vacuum measurement unit : "inHg"

RANGES	psi*	psi ext.*	psi ext.*
		Bar int.	kg/cm ^{2} int.
-30...0	◆	◆	◆
-30...15	◆	◆	◆
-30...30	◆	◆	◆
-30...150	◆	◆	

* vacuum measurement unit : "inHg"

aluminium case : DS 10" (250mm)

MGS8

RANGES	bar	kg/cm^2	kPa	MPa
0...1	◆	◆		◆
0...1,6	◆	◆		◆
0...2,5	◆	◆		◆
0...4	◆	◆		◆
0...6	◆	◆		◆
0...10	◆	◆		◆
0...16	◆	◆		◆
0...25	◆	◆		◆
0...40	◆	◆		◆
0...60	◆	◆		◆
0...100	◆	◆	◆	◆
0...160	◆	◆	◆	
0...250	◆	◆	◆	
0...400	◆	◆	◆	
0...600	◆	◆	◆	
0...1000	◆	◆	◆	
0...1600			◆	
0...2500			◆	

RANGES	psi
0...60	◆
0...100	◆
0...300	◆
0...400	◆
0...600	◆
0...1000	◆
0...1600	◆

stainless steel bourdon tube : DS 4" (100mm)

MGS44

RANGES	bar	kPa	MPa	bar ext.
				psi int.
0...1	◆		◆	◆
0...1,6	◆		◆	◆
0...2,5	◆		◆	◆
0...4	◆		◆	◆
0...6	◆		◆	◆
0...10	◆		◆	◆
0...16	◆		◆	◆
0...25	◆		◆	◆
0...40	◆		◆	◆
0...60	◆			◆
0...100	◆	◆		◆
0...160	◆	◆		◆
0...250	◆	◆		◆
0...300	◆			
0...400	◆	◆		◆
0...600		◆		
0...1000		◆		
0...1600		◆		
0...2500		◆		

RANGES	psi
0...15	◆
0...30	◆
0...60	◆
0...100	◆
0...160	◆
0...200	◆
0...300	◆
0...400	◆
0...600	◆
0...1000	◆
0...1500	◆
0...2000	◆
0...3000	◆
0...4000	◆
0...6000	◆

anti-vibrations version : DS 2" (50mm)

MGS10

RANGES	bar	kPa	MPa	bar ext.
				psi int.
0...2,5	◆		◆	◆
0...4	◆		◆	◆
0...6	◆		◆	◆
0...10	◆		◆	◆
0...16	◆		◆	◆
0...25	◆		◆	◆
0...40	◆		◆	◆
0...60	◆			◆
0...100	◆			◆
0...160	◆			◆
0...250	◆	◆		◆
0...400	◆	◆		◆
0...600		◆		
0...1000		◆		
0...1600		◆		
0...2500		◆		

anti-vibrations version : DS 2.5" (63mm)

MGS10

RANGES	bar	kPa	MPa	bar ext.	bar ext.	bar ext.
				psi int.	kPa int.	MPa int.
0...1	◆		◆	◆	◆	
0...1,6	◆		◆	◆	◆	
0...2,5	◆		◆	◆	◆	
0...4	◆		◆	◆	◆	
0...6	◆		◆	◆	◆	
0...10	◆		◆	◆		◆
0...16	◆		◆	◆		◆
0...25	◆		◆	◆		◆
0...40	◆		◆	◆		◆
0...60	◆		◆	◆		◆
0...100	◆	◆		◆		◆
0...160	◆	◆		◆		◆
0...250	◆	◆		◆		◆
0...300	◆			◆		
0...400	◆	◆		◆		◆
0...600	◆	◆		◆		◆
0...1000		◆				
0...1600		◆				
0...2500		◆				

RANGES	psi	psi int.	psi ext.	psi ext.
		kPa ext.	bar int.	kg/cm 2 int.
0...15	◆	◆	◆	◆
0...30	◆	◆	◆	◆
0...60	◆	◆	◆	◆
0...100	◆	◆	◆	◆
0...160	◆	◆	◆	◆
0...200	◆	◆	◆	◆
0...300	◆	◆	◆	◆
0...400	◆	◆	◆	◆
0...500	◆	◆	◆	◆
0...600	◆	◆	◆	◆
0...1000	◆	◆	◆	◆
0...1500	◆	◆	◆	◆
0...2000	◆	◆	◆	◆
0...3000	◆	◆	◆	◆
0...4000	◆	◆	◆	◆
0...5000	◆	◆	◆	◆
0...6000	◆	◆	◆	◆
0...10000	◆	◆	◆	◆

RANGES	bar	kPa	bar ext.	bar ext.
			*psi int.	kPa int.
-1...0	◆		◆	◆
-1...0,6	◆		◆	◆
-1...1,5	◆		◆	◆
-1...3	◆		◆	◆
-1...5	◆		◆	◆
-1...9	◆		◆	◆
-1...15	◆		◆	◆
-1...24	◆		◆	◆
-100...0		◆		
-100...150		◆		
-100...300		◆		
-100...500		◆		
-100...900		◆		
-100...1500		◆		

* vacuum measurement unit: "inHg"

RANGES	* psi	* psi int.	* psi ext.	* psi ext.
		kPa ext.	bar int.	kg/cm 2 int.
-30...0	◆	◆	◆	◆
-30...15	◆	◆	◆	◆
-30...30	◆	◆	◆	◆
-30...150	◆		◆	

* vacuum measurement unit: "inHg"

anti-vibrations version : DS 4" (100mm)

MGS10

RANGES	bar	kPa	MPa	bar ext.	bar ext.	bar ext.
				psi int.	kPa int.	MPa int.
0...1	◆		◆	◆	◆	
0...1,6	◆		◆	◆	◆	
0...2,5	◆		◆	◆	◆	
0...4	◆		◆	◆	◆	
0...6	◆		◆	◆	◆	
0...10	◆		◆	◆		◆
0...16	◆		◆	◆		◆
0...25	◆		◆	◆		◆
0...40	◆		◆	◆		◆
0...60	◆		◆	◆		◆
0...100	◆	◆	◆	◆		◆
0...160	◆	◆		◆		◆
0...250	◆	◆		◆		◆
0...300	◆					
0...400	◆	◆		◆		◆
0...600	◆	◆		◆		◆
0...1000	◆	◆		◆		◆
0...1600		◆				
0...2500		◆				

RANGES	psi	psi int.	psi ext.	psi ext.
		kPa ext.	bar int.	kg/cm² int.
0...15	◆	◆	◆	◆
0...30	◆	◆	◆	◆
0...60	◆	◆	◆	◆
0...100	◆	◆	◆	◆
0...160	◆	◆	◆	◆
0...200	◆	◆	◆	◆
0...300	◆	◆	◆	◆
0...400	◆	◆	◆	◆
0...600	◆	◆	◆	◆
0...800	◆	◆	◆	◆
0...1000	◆	◆	◆	◆
0...1500	◆	◆	◆	◆
0...2000	◆	◆	◆	◆
0...3000	◆	◆	◆	◆
0...4000	◆	◆	◆	◆
0...5000	◆	◆	◆	◆
0...6000	◆	◆	◆	◆
0...10000	◆	◆	◆	◆
0...15000	◆	◆	◆	◆

RANGES	bar	kPa	bar ext.	bar ext.
			psi int.*	kPa int.
-1...0	◆		◆	◆
-1...0,6	◆		◆	◆
-1...1,5	◆		◆	◆
-1...3	◆		◆	◆
-1...5	◆		◆	◆
-1...9	◆		◆	◆
-1...15	◆		◆	◆
-1...24	◆		◆	◆
-100...0		◆		
-100...150		◆		
-100...300		◆		
-100...500		◆		
-100...900		◆		
-100...1500		◆		
-100...2400		◆		

* vacuum measurement unit: "inHg"

RANGES	psi*	psi int.*	psi ext.*	psi ext.*
		kPa ext.	bar int.	kg/cm 2 int.
-30...0	◆	◆	◆	◆
-30...15	◆	◆	◆	◆
-30...30	◆	◆	◆	◆
-30...150	◆		◆	

* vacuum measurement unit: "inHg"

all stainless steel construction : DS 1.5", 2" (40-50mm)

MGS18

RANGES	bar	kPa	MPa
0...2,5	◆		◆
0...4	◆		◆
0...6	◆		
0...10	◆		
0...16	◆		
0...25	◆		
0...40	◆		
0...250		◆	
0...400		◆	
0...600		◆	
0...1000		◆	
0...1600		◆	
0...2500		◆	

all stainless steel construction : DS 2.5" (63mm)

MGS18

RANGES	bar	kPa	MPa	bar ext.	bar ext.	bar ext.
				psi int.	kPa int.	MPa int.
0...1	◆		◆	◆	◆	
0...1,6	◆		◆	◆	◆	
0...2,5	◆		◆	◆	◆	
0...4	◆		◆	◆	◆	
0...6	◆		◆	◆	◆	
0...10	◆		◆	◆		◆
0...16	◆		◆	◆		◆
0...25	◆		◆	◆		◆
0...40	◆		◆	◆		◆
0...60	◆		◆	◆		◆
0...100	◆	◆	◆	◆		◆
0...160	◆	◆		◆		◆
0...250	◆	◆		◆		◆
0...300	◆			◆		
0...400	◆	◆		◆		◆
0...600	◆	◆		◆		◆
0...1000	◆	◆		◆		◆
0...1600		◆				
0...2500		◆				

RANGES	psi	psi внут.	psi ext.	psi ext.
		kPa ext.	bar int.	kg/cm²int.
0...15	◆	◆	◆	◆
0...30	◆	◆	◆	◆
0...60	◆	◆	◆	◆
0...100	◆	◆	◆	◆
0...160	◆	◆	◆	◆
0...200	◆	◆	◆	◆
0...300	◆	◆	◆	◆
0...400	◆	◆	◆	◆
0...600	◆	◆	◆	◆
0...1000	◆	◆	◆	◆
0...1500	◆	◆	◆	◆
0...2000	◆	◆	◆	◆
0...3000	◆	◆	◆	◆
0...4000	◆	◆	◆	◆
0...5000	◆	◆	◆	◆
0...6000	◆	◆	◆	◆
0...10000	◆	◆	◆	◆
0...15000	◆	◆	◆	◆

RANGES	bar	kPa	bar ext.	bar ext.
			psi int.*	kPa int.
-1...0	◆		◆	◆
-1...0,6	◆		◆	◆
-1...1,5	◆		◆	◆
-1...3	◆		◆	◆
-1...5	◆		◆	◆
-1...9	◆		◆	◆
-1...15	◆		◆	◆
-1...24	◆		◆	◆
-100...0		◆		
-100...150		◆		
-100...300		◆		
-100...500		◆		
-100...900		◆		
-100...1500		◆		

* vacuum measurement unit : "inHg"

RANGES	psi*	psi int.*	psi ext.*	psi ext.*
		kPa ext.	bar int.	kg/cm²int.
-30...0	◆	◆	◆	◆
-30...15	◆	◆	◆	◆
-30...30	◆	◆	◆	◆
-30...150	◆		◆	

* vacuum measurement unit : "inHg"

all stainless steel construction : DS 4", 6" (100-150mm)

MGS18

"E" = DS *4"* (100mm); "G" = DS *6"* (150mm)

RANGES	bar	kPa	MPa	bar ext.	bar ext.	bar ext.
				psi int.	kPa int.	MPa int.
0...0,6 (1)	E G			E G	E G	
0...1	E G		E G	E G	E G	
0...1,6	E G		E G	E G	E G	
0...2,5	E G		E G	E G	E G	
0...4	E G		E G	E G	E G	
0...6	E G		E G	E G	E G	
0...10	E G		E G	E G		E G
0...16	E G		E G	E G		E G
0...25	E G		E G	E G		E G
0...40	E G		E G	E G		E G
0...60	E G	E G (1)	E G	E G		E G
0...100	E G	E G	E G	E G		E G
0...160	E G	E G	E G	E G		E G
0...250	E G	E G		E G		E G
0...300	E G					
0...400	E G	E G		E G		E G
0...600	E G	E G		E G		E G
0...1000	E G	E G		E G		E G
0...1600	E G	E G		E G		E G
0...2500		E G				

(1) not available for filled model

RANGES	psi	psi int.	psi ext.	psi ext.
		kPa ext.	bar int.	kg/cm ² int.
0...15	E G	E G	E G	E G
0...30	E G	E G	E G	E G
0...60	E G	E G	E G	E G
0...100	E G	E G	E G	E G
0...160	E G	E G	E G	E G
0...200	E G	E G	E G	E G
0...300	E G	E G	E G	E G
0...400	E G	E G	E G	E G
0...600	E G	E G	E G	E G
0...1000	E G	E G	E G	E G
0...1500	E G	E G	E G	E G
0...2000	E G	E G	E G	E G
0...3000	E G	E G	E G	E G
0...4000	E G	E G	E G	E G
0...5000	E G	E G	E G	E G
0...6000	E G	E G	E G	E G
0...10000	E G	E G	E G	E G
0...15000	E G	E G	E G	E G
0...20000	E G	E G	E G	E G
0...30000 (1)	E G	E G	E G	E G

(1) working pressureo: max 75% of FSV
overpressure: 10% of FSV

RANGES	bar	kPa	bar ext.	bar ext.
			psi int.*	kPa int.
-1...0	E G		E G	E G
-1...0,6	E G		E G	E G
-1...1,5	E G		E G	E G
-1...3	E G		E G	E G
-1...5	E G		E G	E G
-1...9	E G		E G	E G
-1...15	E G		E G	E G
-1...24	E G		E G	E G
-100...0		E G		
-100...150		E G		
-100...300		E G		
-100...500		E G		
-100...900		E G		
-100...1500		E G		
-100...2400		E G		

* vacuum measurement unit : "inHg"

RANGES	psi*	psi int.*	psi ext.*	psi ext.*
		kPa ext.	bar int.	kg/cm ² int.
-30...0	E G	E G	E G	E G
-30...15	E G	E G	E G	E G
-30...30	E G	E G	E G	E G
-30...150	E G	/	EG	/

* vacuum measurement unit : "inHg"

"solid-front" version, all stainless steel construction : DS 2.5" (63mm)

MGS20

RANGES	bar	kPa	MPa
0...1	◆		◆
0...1,6	◆		◆
0...2,5	◆		◆
0...4	◆		◆
0...6	◆		◆
0...10	◆		◆
0...16	◆		◆
0...25	◆		◆
0...40	◆		◆
0...60	◆		◆
0...100	◆	◆	◆
0...160	◆	◆	
0...250	◆	◆	
0...300	◆		
0...400	◆	◆	
0...600	◆	◆	
0...1000	◆	◆	
0...1600		◆	
0...2500		◆	

RANGES	psi
0...15	◆
0...30	◆
0...60	◆
0...100	◆
0...160	◆
0...200	◆
0...300	◆
0...400	◆
0...600	◆
0...1000	◆
0...1500	◆
0...2000	◆
0...3000	◆
0...4000	◆
0...5000	◆
0...6000	◆
0...10000	◆
0...15000	◆

RANGES	bar	kPa
-1...0	◆	
-1...0,6	◆	
-1...1,5	◆	
-1...3	◆	
-1...5	◆	
-1...9	◆	
-1...15	◆	
-1...24	◆	
-100...0		◆
-100...150		◆
-100...300		◆
-100...500		◆
-100...900		◆
-100...1500		◆

* vacuum measurement unit : "inHg"

RANGES	psi*
-30...0	◆
-30...15	◆
-30...30	◆
-30...150	◆

* vacuum measurement unit : "inHg"

bourdon tube pressure gauges : available ranges

"solid-front" version, all stainless steel construction : DS4", 6" (100-150mm)

MGS20

"E" = DS 4" (100mm); "G" = DS 6" (150mm)

RANGES	bar	kPa	MPa	bar ext.	bar ext.	bar ext.
				psi int.	kPa int.	MPa int.
0...0,6 (1)	E G			E G	E G	
0...1	E G		E G	E G	E G	
0...1,6	E G		E G	E G	E G	
0...2,5	E G		E G	E G	E G	
0...4	E G		E G	E G	E G	
0...6	E G		E G	E G	E G	
0...10	E G		E G	E G		E G
0...16	E G		E G	E G		E G
0...25	E G		E G	E G		E G
0...40	E G		E G	E G		E G
0...60	E G	E G (1)	E G	E G		E G
0...100	E G	E G	E G	E G		E G
0...160	E G	E G	E G	E G		E G
0...250	E G	E G		E G		E G
0...300	E G					
0...400	E G	E G		E G		E G
0...600	E G	E G		E G		E G
0...1000	E G	E G		E G		E G
0...1600	E G	E G		E G		E G
0...2500		E G				

(1)not available for filled model

RANGES	psi	psi внут.	psi ext.	psi ext.
		kPa ext.	bar int.	kg/cm ^{2} int.
0...15	E G	E G	E G	E G
0...30	E G	E G	E G	E G
0...60	E G	E G	E G	E G
0...100	E G	E G	E G	E G
0...160	E G	E G	E G	E G
0...200	E G	E G	E G	E G
0...300	E G	E G	E G	E G
0...400	E G	E G	E G	E G
0...600	E G	E G	E G	E G
0...1000	E G	E G	E G	E G
0...1500	E G	E G	E G	E G
0...2000	E G	E G	E G	E G
0...3000	E G	E G	E G	E G
0...4000	E G	E G	E G	E G
0...5000	E G	E G	E G	E G
0...6000	E G	E G	E G	E G
0...10000	E G	E G	E G	E G
0...15000	E G	E G	E G	E G
0...20000	E G	E G	E G	E G
0...30000 (1)	EG	EG	EG	EG

(1) working pressure: max 75% of FSV
overpressure: 10% of FSV

RANGES	bar	kPa	bar ext.	bar ext.
			psi int.*	kPa int.
-1...0	E G		E G	E G
-1...0,6	E G		E G	E G
-1...1,5	E G		E G	E G
-1...3	E G		E G	E G
-1...5	E G		E G	E G
-1...9	E G		E G	E G
-1...15	E G		E G	E G
-1...24	E G		E G	E G
-100...0		E G		
-100...150		E G		
-100...300		E G		
-100...500		E G		
-100...900		E G		
-100...1500		E G		
-100...2400		E		

* vacuum measurement unit : "inHg"

RANGES	psi*	psi int.*	psi ext.*	psi ext.*
		kPa ext.	bar int.	kg/cm ^{2} int.
-30...0	E G	E G	E G	E G
-30...15	E G	E G	E G	E G
-30...30	E G	E G	E G	E G
-30...150	E G	/	EG	/

* vacuum measurement unit : "inHg"

"solid-front" version, turret case : DS 4.5" (125mm)

MGS30

RANGES	bar	kPa	MPa	bar ext.
				psi int.
0...0,6	◆ (1)		◆	◆ (1)
0...1	◆		◆	◆
0...1,6	◆		◆	◆
0...2,5	◆		◆	◆
0...4	◆		◆	◆
0...6	◆		◆	◆
0...10	◆		◆	◆
0...16	◆		◆	◆
0...25	◆		◆	◆
0...40	◆		◆	◆
0...60	◆	◆ (1)	◆	◆
0...100	◆	◆	◆ (3)	◆
0...160	◆	◆	◆ (3)	◆
0...250	◆	◆		◆
0...300	◆			◆
0...400	◆	◆		◆
0...600	◆	◆		◆
0...1000	◆ (3)	◆		◆ (3)
0...1600	◆ (3)	◆		◆ (3)
0...2500		◆		

RANGES	psi	psi int.	psi ext.
		kPa ext.	bar int.
0...15	◆	◆	◆
0...30	◆	◆	◆
0...60	◆	◆	◆
0...100	◆	◆	◆
0...160	◆	◆	◆
0...200	◆	◆	◆
0...300	◆	◆	◆
0...400	◆	◆	◆
0...600	◆	◆	◆
0...800	◆	◆	◆
0...1000	◆	◆	◆
0...1500	◆	◆	◆
0...2000	◆	◆	◆
0...3000	◆	◆	◆
0...4000	◆	◆	◆
0...5000	◆	◆	◆
0...6000	◆	◆	◆
0...10000	◆	◆	◆
0...15000 (3)	◆	◆	◆
0...20000 (3)	◆	◆	◆
0...30000 (2)(3)	◆		◆

RANGES	bar	kPa
-1...0	◆	
-1...0,6	◆	
-1...1,5	◆	
-1...3	◆	
-1...5	◆	
-1...9	◆	
-1...15	◆	
-1...24	◆	
-100...0		◆
-100...150		◆
-100...300		◆
-100...500		◆
-100...900		◆
-100...1500		◆
-100...2400		◆

RANGES	psi*	psi int.*
		kPa ext.
-30...0	◆	◆
-30...15	◆	◆
-30...30	◆	◆
-30...60	◆	◆
-30...100	◆	◆
-30...150	◆	◆

* vacuum measurement unit : "inHg"

(1) not available for filled model
(2) working pressure: max 75% of FSV.; overpressure: 10% of FSV
(3) with decreasing pressure, the accuracy is max 1,2% of FSV

"solid-front" version, turret case : DS 4.5" (125mm)

MGS30

RANGES	bar	kPa	MPa
0...1			◆
0...1,6			◆
0...2,5	◆		◆
0...4	◆		◆
0...6	◆		◆
0...10	◆		◆
0...16	◆		◆
0...25	◆		◆
0...40	◆		◆
0...60	◆		◆
0...100	◆		◆
0...160	◆		
0...250	◆	◆	
0...300	◆	◆	
0...400	◆	◆	
0...600	◆	◆	
0...1000	◆	◆	
0...1600		◆	
0...2500		◆	

RANGES	psi	psi int.
		kPa ext.
0...30	F	◆
0...60	F	◆
0...100	F	◆
0...160	F	◆
0...200	F	◆
0...300	F	◆
0...400	F	◆
0...600	F	◆
0...800	F	◆
0...1000	F	◆
0...1500	F	◆
0...2000	F	◆
0...3000	F	◆
0...4000	F	◆
0...5000	F	◆
0...6000	F	◆
0...10000	F	◆
0...15000	F	◆

RANGES	bar
-1...1,5	◆
-1...3	◆
-1...5	◆
-1...9	◆
-1...15	◆
-1...24	◆

RANGES	psi*	psi int.*
		kPa ext.
-30...15	◆	◆
-30...30	◆	◆
-30...60	◆	◆
-30...100		◆
-30...150	◆	◆
-30...200		◆
-30...300	◆	◆

* vacuum measurement unit : "inHg"

NACE MR 01.03 version : DS 4", 6" (100-150mm)

MGS36-37

"E" = DS *4"* (100mm); "G" = DS *6"* (150mm)

RANGES	bar	kPa	MPa
0...1	E G		E G
0...1,6	E G		E G
0...2,5	E G		E G
0...4	E G		E G
0...6	E G		E G
0...10	E G		E G
0...16	E G		E G
0...25	E G		E G
0...40	E G		E G
0...60	E G		E G
0...100	E G	E G	
0...160	E G	E G	
0...250	E G	E G	
0...300	E G		
0...400	E G	E G	
0...600	E G	E G	

RANGES	psi
0...15	E G
0...30	E G
0...60	E G
0...100	E G
0...160	E G
0...200	E G
0...300	E G
0...400	E G
0...600	E G
0...1000	E G
0...1500	E G
0...2000	E G
0...3000	E G
0...4000	E G
0...5000	E G
0...6000	E G

RANGES	bar	kPa
-1...0	E G	
-1...0,6	E G	
-1...1,5	E G	
-1...3	E G	
-1...5	E G	
-1...9	E G	
-1...15	E G	
-1...24	E G	
-100...0		E G
-100...150		E G
-100...300		E G
-100...500		E G
-100...900		E G
-100...1500		E G
-100...2400		E

* vacuum unit of measurement: "inHg"

RANGES	psi*
-30...0	E G
-30...15	E G
-30...30	E G
-30...150	E G

* vacuum unit of measurement: "inHg"

"solid-front" NACE MR 01.03 version : DS 4", 6" (100-150mm)

MGS40-41

"E" = DS *4"* (100mm); "G" = DS *6"* (150mm)

RANGES	bar	kPa	MPa
0...1	E G		E G
0...1,6	E G		E G
0...2,5	E G		E G
0...4	E G		E G
0...6	E G		E G
0...10	E G		E G
0...16	E G		E G
0...25	E G		E G
0...40	E G		E G
0...60	E G		E G
0...100	E G	E G	
0...160	E G	E G	
0...250	E G	E G	
0...300	E G		
0...400	E G	E G	
0...600	E G	E G	

RANGES	psi
0...15	E G
0...30	E G
0...60	E G
0...100	E G
0...160	E G
0...200	E G
0...300	E G
0...400	E G
0...600	E G
0...1000	E G
0...1500	E G
0...2000	E G
0...3000	E G
0...4000	E G
0...6000	E G
0...10000	E G

RANGES	bar	kPa
-1...0	E G	
-1...0,6	E G	
-1...1,5	E G	
-1...3	E G	
-1...5	E G	
-1...9	E G	
-1...15	E G	
-1...24	E G	
-100...0		E G
-100...150		E G
-100...300		E G
-100...500		E G
-100...900		E G
-100...1500		E G
-100...2400		E

* vacuum unit of measurement: "inHg"

RANGES	psi*
-30...0	E G
-30...15	E G
-30...30	E G
-30...150	E G

* vacuum unit of measurement: "inHg"

"solid-front" NACE MR 01.03 version, turret case : DS 4.5" (125mm)

MGS60-61

RANGES	bar	kPa	MPa
0...1	◆		◆
0...1,6	◆		◆
0...2,5	◆		◆
0...4	◆		◆
0...6	◆		◆
0...10	◆		◆
0...16	◆		◆
0...25	◆		◆
0...40	◆		◆
0...60	◆		◆
0...100	◆	◆	
0...160	◆	◆	
0...250	◆	◆	
0...300	◆		
0...400	◆	◆	
0...600	◆	◆	

RANGES	psi
0...15	◆
0...30	◆
0...60	◆
0...100	◆
0...160	◆
0...200	◆
0...300	◆
0...400	◆
0...600	◆
0...800	◆
0...1000	◆
0...1500	◆
0...2000	◆
0...3000	◆
0...4000	◆
0...6000	◆
0...10000	◆

RANGES	bar	kPa
-1...0	◆	
-1...0,6	◆	
-1...1,5	◆	
-1...3	◆	
-1...5	◆	
-1...9	◆	
-1...15	◆	
-1...24	◆	
-100...0		◆
-100...150		◆
-100...300		◆
-100...500		◆
-100...900		◆
-100...1500		◆
-100...2400		◆

RANGES	psi*
-30...0	◆
-30...15	◆
-30...30	◆
-30...60	◆
-30...100	◆
-30...150	◆

* vacuum unit of measurement: "inHg"

with microswitch electric contact : DS 4" (100mm)

MGS72-74

Ranges	bar	kPa	MPa
0...1	◆		◆
0...1,6	◆		◆
0...2,5	◆		◆
0...4	◆		◆
0...6	◆		◆
0...10	◆		◆
0...16	◆		◆
0...25	◆		◆
0...40	◆		◆
0...60	◆		◆
0...100	◆	◆	
0...160	◆	◆	
0...250	◆	◆	
0...300	◆		
0...400	◆	◆	
0...600	◆	◆	
0...1000		◆	
0...1600		◆	
0...2500		◆	

Ranges	psi
0...15	◆
0...30	◆
0...60	◆
0...100	◆
0...160	◆
0...200	◆
0...300	◆
0...400	◆
0...600	◆
0...800	◆
0...1000	◆
0...1500	◆
0...2000	◆
0...3000	◆
0...4000	◆
0...5000	◆
0...6000	◆
0...10000	◆

Ranges	bar	kPa
-1...0	◆	
-1...0,6	◆	
-1...1,5	◆	
-1...3	◆	
-1...5	◆	
-1...9	◆	
-1...15	◆	
-1...24	◆	
-100...0		◆
-100...150		◆
-100...300		◆
-100...500		◆
-100...900		◆
-100...1500		◆
-100...2400		◆

* vacuum unit of measurement: "inHg"

Ranges	psi*
-30...0	◆
-30...15	◆

* vacuum unit of measurement: "inHg"

MCE10-18

with electric, inductive or electronic contact : DS 4" (100 mm)

Ranges	bar	kPa	MPa
0...1	◆		◆
0...1,6	◆		◆
0...2,5	◆		◆
0...4	◆		◆
0...6	◆		◆
0...10	◆		◆
0...16	◆		◆
0...25	◆		◆
0...40	◆		◆
0...60	◆		◆
0...100	◆	◆	◆
0...160	◆	◆	◆
0...250	◆	◆	
0...400	◆	◆	
0...600	◆	◆	
0...1000	◆	◆	
0...1600 (1)	◆	◆	

(1) Available only for MCE18

Ranges	psi
0...15 (1)	F
0...30	◆
0...60	◆
0...100	◆
0...160	◆
0...200	◆
0...300	◆
0...400	◆
0...600	◆
0...1000	◆
0...1500	◆
0...2000	◆
0...3000	◆
0...4000	◆
0...5000	◆
0...6000	◆
0...10000	◆
0...15000	◆
0...20000 (1)	◆

MCE20

with electric, inductive or electronic contact : DS 6" (150 mm)

Ranges	bar	kPa	MPa
0...1	◆		◆
0...1,6	◆		◆
0...2,5	◆		◆
0...4	◆		◆
0...6	◆		◆
0...10	◆		◆
0...16	◆		◆
0...25	◆		◆
0...40	◆		◆
0...60	◆		◆
0...100	◆	◆	◆
0...160	◆	◆	◆
0...250	◆	◆	
0...400	◆	◆	
0...600	◆	◆	
0...1000	◆	◆	
0...1600	◆	◆	

Ranges	psi
0...15	◆
0...30	◆
0...60	◆
0...100	◆
0...160	◆
0...200	◆
0...300	◆
0...400	◆
0...500	◆
0...600	◆
0...1000	◆
0...1500	◆
0...2000	◆
0...3000	◆
0...4000	◆
0...5000	◆
0...6000	◆
0...10000	◆
0...15000	◆
0...20000	◆

RG - 07/12

IN ORDER TO IMPROVE THEIR PRODUCTION, MESSRS. NUOVA FIMA RESERVE THE RIGHT TO THEMSELVES TO MAKE ALL THE MODIFICATIONS THAT THEY DEEM INDISPENSABLE AT ANY TIME. UPDATED DATA-SHEETS ARE AVAILABLE ON SITE: **www.nuovafima.com**

Copyright © Nuova Fima S.r.l. All rights reserved. Any part of this publication should not be reproduced without a written Nuova Fima's S.p.A. approval

NUOVA FIMA USA Inc.
www.nuovafima.com - e-mail: infousa@nuovafima.com
4123 Hollister, Suite G - TX 77080 Houston
TEL. +1 713.690.9800 - FAX +1 713.690.9803

NUOVA FIMA srl
www.nuovafima.com - e-mail: info@nuovafima.com
P.O. BOX 58 - VIA C. BATTISTI 59 - 28045 INVORIO (NO) ITALY
TEL. +39 0322 253200 - FAX +39 0322 253232

back flange lower connection pressure gauges

Model	DS	b_1	h_1	E	D	f
MGS10	*2.5* (63)	*1.34* (34)	*1.36* (34,5)	*2.95* (75)	*3.35* (85)	*0.14* (3,6)
MGS18	*2.5* (63)	*1.48* (37,5) (1)	*1.36* (34,5)	*2.95* (75)	*3.35* (85)	*0.14* (3,6)
MS4-MGS44	*4* (100)	*1.49* (38)	*2.05* (52)	*4.57...4.72* (116...120)	*5.12* (130)	*0.24* (6)
MGS10-18-19-36	*4* (100)	*2.07* (52,5)	*2.05* (52)	*4.57...4.72* (116...120)	*5.12* (130)	*0.24* (6)
MGS20-21-40	*4* (100)	*2.85* (72,5)	-	*4.57...4.72* (116...120)	*5.20* (132)	*0.24* (6)
MN14/10-18	*4* (100)	*2.07* (52,5)	*2.05* (52)	*4.57...4.72* (116...120)	*5.12* (130)	*0.24* (6)
MCE10-18	*4* (100)	*3.01...3.41* (76,5...86,5)	*2.05* (52)	*4.57...4.72* (116...120)	*5.12* (130)	*0.24* (6)
MGS72-74	*4* (100)	*2.07* (52,5)	*2.05* (52)	*4.57...4.72* (116...120)	*5.12* (130)	*0.24* (6)
MS1	*6* (150)	*2.13* (54)	*3.35* (85)	*6.61...7.01* (168...178)	*7.48* (190)	*0.24* (6)
MGS18-19-36	*6* (150)	*2.13* (54)	*3.35* (85)	*6.61...7.01* (168...178)	*7.48* (190)	*0.24* (6)
MGS20-21-40	*6* (150)	*2.97* (75,5)	*3.35* (85)	*6.61...7.01* (168...178)	*7.48* (190)	*0.24* (6)
MN15	*6* (150)	*2.13* (54)	*3.35* (85)	*6.61...7.01* (168...178)	*7.48* (190)	*0.24* (6)
MN16-17	*6* (150)	*2.97* (75,5)	*3.35* (85)	*6.61...7.01* (168...178)	*7.48* (190)	*0.24* (6)
MN25	*6* (150)	-	*3.35* (85)	*6.61...7.01* (168...178)	*7.48* (190)	*0.24* (6)
MN14/10-18	*6* (150)	*2.13* (54)	*3.35* (85)	*6.61...7.01* (168...178)	*7.48* (190)	*0.24* (6)
MCE20	*6* (150)	*5.49* (139,5)	*3.35* (85)	*6.61...7.01* (168...178)	*7.48* (190)	*0.24* (6)

dimensions : *inches* (mm)

(1) *1.32* (33,5) with crimped ring
(2) *0.61* (15,5) with crimped ring

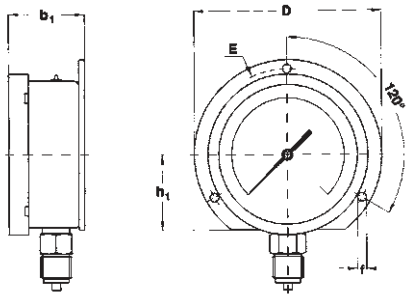

C - BACK FLANGE,
for lower connection

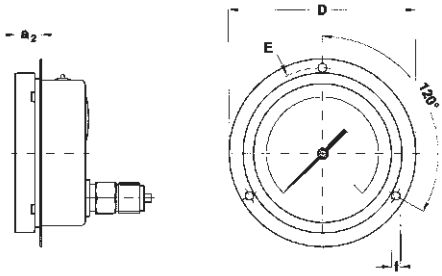

E - FRONT FLANGE,
for back connection

front flange back connection pressure gauges

Model	DS	a_2	E	D	f
MGS10	*2.5* (63)	*0.26* (6,6)	*2.95* (75)	*3.35* (85)	*0.14* (3,6)
MGS18	*2.5* (63)	*0.26* (6,6)	*2.95* (75)	*3.35* (85)	*0.14* (3,6)
MGS20	*2.5* (63)	*0.45* (11,5)	*2.95* (75)	*3.35* (85)	*0.14* (3,6)
MS4 - MGS44	*4* (100)	*0.71* (18)	*4.57...4.72* (116...120)	*5.20* (132)	*0.24* (6)
MGS10	*4* (100)	*0.79* (20)	*4.57...4.72* (116...120)	*5.20* (132)	*0.24* (6)
MGS18-19-36	*4* (100)	*0.79* (20)	*4.57...4.72* (116...120)	*5.20* (132)	*0.24* (6)
MGS20-21-40	*4* (100)	*0.79* (20)	*4.57...4.72* (116...120)	*5.20* (132)	*0.24* (6)
MN14/10-18	*4* (100)	*0.79* (20)	*4.57...4.72* (116...120)	*5.20* (132)	*0.24* (6)
MCE10-18	*4* (100)	*0.79* (20)	*4.57...4.72* (116...120)	*5.20* (132)	*0.24* (6)
MGS72-74	*4* (100)	*0.79* (20)	*4.57...4.72* (116...120)	*5.20* (132)	*0.24* (6)
MGS18-19-36	*6* (150)	*1* (25,5)	*6.61...7.01* (168...178)	*7.48* (190)	*0.24* (6)
MGS20-21-40	*6* (150)	*1* (25,5)	*6.61...7.01* (168...178)	*7.48* (190)	*0.24* (6)
MN15	*6* (150)	*1* (25,5)	*6.61...7.01* (168...178)	*7.48* (190)	*0.24* (6)
MN16-17	*6* (150)	*1* (25,5)	*6.61...7.01* (168...178)	*7.48* (190)	*0.24* (6)
MN25	*6* (150)	*1* (25,5)	*6.61...7.01* (168...178)	*7.48* (190)	*0.24* (6)
MN14/10-18	*4* (100)	*0.79* (20)	*4.57...4.72* (116...120)	*5.20* (132)	*0.24* (6)

dimensions : *inches* (mm)

back flange lower connection for solid-front pressure gauges

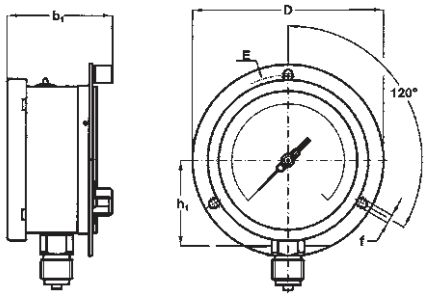

C - BACK FLANGE,
for lower connection

Model	D S	b_1	h_1	f	D	E
MGS20-21-40	*4* (100)	*2.85* (72,5)	-	*0.24* (6)	*5.19* (132)	*4.56...4.72* (116...120)
MGS20-21-40	*6* (150)	*2.85* (72,5)	*3.34* (85)	*0.24* (6)	*7.48* (190)	*6.61...7.00* (168...178)

clamp back connection pressure gauges

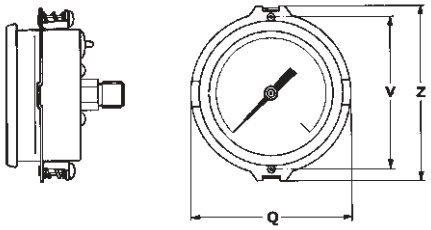

Model	DS	Q	Z	V
MS1, MGS10-18	*2* (50)	*2.46* (62,6)	*2.66* (67,5)	*2.30* (58,5)

dimensions : *inches* (mm)

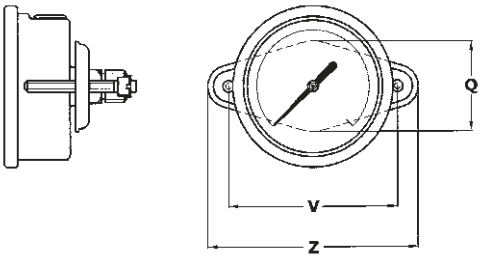

Model	DS	Q	Z	V
MGS10-18	*2.5* (63)	*1.50* (38)	*3.54* (90)	*2.83* (72)

dimensions : *inches* (mm)

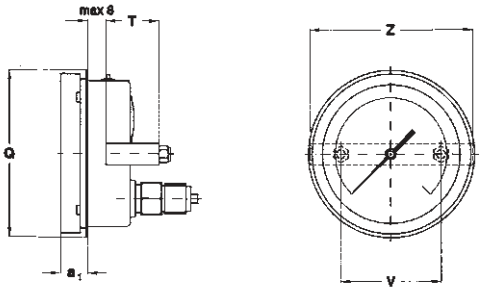

B - "U" CLAMP,
for back connection

Model	DS	Q	a_1	T	Z	V
MS4	*4* (100)	---	---	*1.2* (30,5)	*4.41* (112)	*2.76* (70)
MGS10-18-19-36	*4* (100)	*4.41* (112)	*0.79* (20)	*1.63* (41,5)	*4.41* (112)	*2.76* (70)
MN14/10-18	*4* (100)	*4.41* (112)	*0.79* (20)	*1.63* (41,5)	*4.41* (112)	*2.76* (70)
MGS72-74	*4* (100)	*4.41* (112)	*0.79* (20)	*1.63* (41,5)	*4.41* (112)	*2.76* (70)
MS1	*6* (150)	*6.46* (164)	*0.81* (20,5)	*1.63* (41,5)	*6.10* (155)	*4.17* (106)
MGS18-19-36	*6* (150)	*6.46* (164)	*0.81* (20,5)	*1.63* (41,5)	*6.10* (155)	*4.17* (106)
MN15	*6* (150)	*6.46* (164)	*0.81* (20,5)	*1.63* (41,5)	*6.10* (155)	*4.17* (106)
MN14/10-18	*6* (150)	*6.46* (164)	*0.81* (20,5)	*1.63* (41,5)	*6.10* (155)	*4.17* (106)

dimensions : *inches* (mm)

Copyright © Nuova Fima srl. All rights reserved. Any part of this publication should not be reproduced without a written Nuova Fima's srl approval

NUOVA FIMA USA Inc.
www.nuovafima.com - e-mail: infousa@nuovafima.com
4123 Hollister, Suite G - TX 77080 Houston
TEL. +1 713.690.9800 - FAX +1 713.690.9803

NUOVA FIMA srl
www.nuovafima.com - e-mail: info@nuovafima.com
P.O. BOX 58 - VIA C. BATTISTI 59 - 28045 INVORIO (NO) ITALY
TEL. +39 0322 253200 - FAX +39 0322 253232

RC2 - 07/15
IN ORDER TO IMPROVE THEIR PRODUCTION, MESSRS. NUOVA FIMA RESERVE THE RIGHT TO THEMSELVES TO MAKE ALL THE MODIFICATIONS THAT THEY DEEM INDISPENSABLE AT ANY TIME. UPDATED DATA-SHEETS ARE AVAILABLE ON SITE: www.nuovafima.com

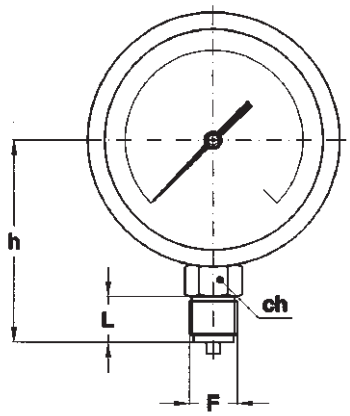

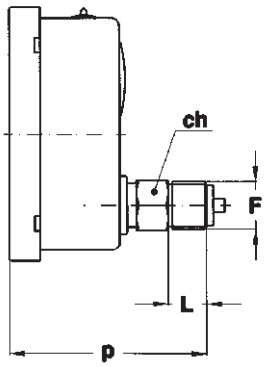

standard version

MS1

F	Cod.	DS 1.5" (40mm)			DS 2" (50mm)				DS 12" (50mm)			
		p	ch	L	h	p	ch	L	h	p	ch	L
G 1/8 B	11M	*1.77* (45)	*0.47* (12)	*0.39* (10)	*1.75* (44,5)	*1.81* (46)	*0.55* (14)(1)	*0.39* (10)				
1/8-18 NPT	13M	*1.77* (45)	*0.47* (12)	*0.39* (10)	*1.75* (44,5)	*1.81* (46)	*0.55* (14)(1)	*0.39* (10)				
G 1/4 B	21M	*1.88* (48)	*0.47* (12)	*0.51* (13)	*1.87* (47,5)	*1.94* (49,5)	*0.55* (14)(1)	*0.51* (13)				
1/4-18 NPT	23M	*2.04* (52)	*0.47* (12)	*0.59* (15)	*1.94* (49,5)	*2.10* (53,5)	*0.55* (14)(1)	*0.59* (15)	*4.40* (112)	*3.30* (84)	*0.86* (22)	*0.59* (15)
G 1/2 B	41M								*4.60* (117)	*3.50* (89)	*0.86* (22)	*0.78* (20)
1/2-14 NPT	43M								*4.60* (117)	*3.50* (89)	*0.86* (22)	*0.78* (20)

(1) ch= *0.47* (12) if back connection

dimensions : *inches* (mm)

anti-vibrations version

MS4

F	Cod.	DS 4" (100mm)			
		h	p	ch	L
G 1/4 B	21M	*3.14* (80)	*2.63* (67)	*0.86* (22)	*0.51* (13)
R 1/4-ISO 7/1	22M	*3.22* (82)	*2.71* (69)	*0.86* (22)	0.59 (15)
1/4-18 NPT	23M	*3.22* (82)	*2.71* (69)	*0.86* (22)	0.59 (15)
7/16-20UNF	24M	*3.22* (82)	*2.71* (69)	*0.86* (22)	0.59 (15)
G 3/8 B	31M	*3.26* (83)	*2.75* (70)	*0.86* (22)	*0.62* (16)
G 1/2 B	41M	*3.42* (87)	*2.92* (74)	*0.86* (22)	*0.78* (20)
R 1/2-ISO 7/1	42M	*3.42* (87)	*2.92* (74)	*0.86* (22)	*0.78* (20)
1/2-14 NPT	43M	*3.42* (87)	*2.92* (74)	*0.86* (22)	*0.78* (20)
M 20 x 1,5	97M	*3.42* (87)	*2.92* (74)	*0.86* (22)	*0.78* (20)

dimensions : *inches* (mm)

stainless steel bourdon tube

F	Cod.	DS 4" (100mm)		
		h	ch	L
1/4-18 NPT	23M	*3.22* (82)	*0.87* (22)	*0.59* (15)
1/2-14 NPT	43M	*3.42* (87)	*0.87* (22)	*0.79* (20)

dimensions : *inches* (mm)

anti-vibrations version

MGS10

F	Cod.	DS 2" (50mm)				DS 2.5" (63mm)				DS 4" (100mm)			
		h	p	ch	L	h	p	ch	L	h	p	ch	L
G 1/8 B	11M	*1.75* (44,5)	*1.81* (46)	*0.55* (14)(1)	*0.39* (10)	*2.08* (53)	*2.08* (53)	*0.55* (14)	*0.39* (10)				
1/8-18 NPT	13M	*1.75* (44,5)	*1.81* (46)	*0.55* (14)(1)	*0.39* (10)	*2.08* (53)	*2.08* (53)	*0.55* (14)	*0.39* (10)				
G 1/4 B	21M	*1.87* (47,5)	*1.94* (49,5)	*0.55* (14)(1)	*0.51* (13)	*2.16* (55)	*2.16* (55)	*0.55* (14)	*0.51* (13)	*3.18* (81)	*3.26* (83)	*0.86* (22)	*0.51* (13)
1/4-18 NPT	23M	*1.94* (49,5)	*2.10* (53,5)	*0.55* (14)(1)	*0.59* (15)	*2.12* (54)	*2.12* (54)	*0.55* (14)	*0.51* (13)	*3.26* (83)	*3.34* (85)	*0.86* (22)	*0.59* (15)
M10X1	86M					*2.08* (53)	*2.08* (53)	*0.55* (14)	*0.39* (10)			*0.86* (22)	
R1/4-ISO7/1	22M					*2.12* (54)	*2.12* (54)	*0.55* (14)	*0.51* (13)	*3.26* (83)	*3.34* (85)	*0.86* (22)	*0.59* (15)
7/16-20UNF	24M					*2.20* (56)	*2.20* (56)	*0.55* (14)	*0.55* (14)	*3.26* (83)	*3.34* (85)	*0.86* (22)	*0.59* (15)
G 3/8 B	31M									*3.30* (84)	*3.38* (86)	*0.86* (22)	*0.62* (16)
G 1/2 B	41M									*3.46* (88)	*3.54* (90)	*0.86* (22)	*0.78* (20)
1/2-14 NPT	43M									*3.46* (88)	*3.54* (90)	*0.86* (22)	*0.78* (20)
M20X1,5	97M									*3.46* (88)	*3.54* (90)	*0.86* (22)	*0.78* (20)

(1) ch= *0.47* (12) if back connection

dimensions : *inches* (mm)

all stainless steel version

MGS18

F	Cod.	DS 1.5" (40mm)			DS 2" (50mm)				DS 2.5" (63mm)				DS 4" (100mm)				DS 6" (150mm)			
		p	ch	L	h	p	ch	L	h	p	ch	L	h	p	ch	L	h	p	ch	L
G 1/8 B	11M	*1.73* (44)	*0.47* (12)	*0.39* (10)	*1.75* (44,5)	*1.81* (46)	*0.55*(1) (14)(1)	*0.39* (10)	*2.08* (53)	*2.08* (53)	*0.55* (14)	*0.39* (10)								
1/8-18 NPT	13M	*1.73* (44)	*0.47* (12)	*0.39* (10)	*1.75* (44,5)	*1.81* (46)	*0.55*(1) (14)(1)	*0.39* (10)	*2.08* (53)	*2.08* (53)	*0.55* (14)	*0.39* (10)								
G 1/4 B	21M	*1.92* (49)	*0.47* (12)	*0.51* (13)	*1.87* (47,5)	*2* (51)	*0.55*(1) (14)(1)	*0.51* (13)	*2.16* (55)	*2.16* (55)	*0.55* (14)	*0.51* (13)	*3.11* (79)	*3.34* (85)	*0.86* (22)	*0.51* (13)	*4.33* (110)	*3.28* (83,5)	*0.86* (22)	*0.51* (13)
1/4-18 NPT	23M	*2* (51)	*0.47* (12)	*0.59* (15)	*1.94* (49,5)	*2.08* (53)	*0.55*(1) (14)(1)	*0.59* (15)	*2.12* (54)	*2.12* (54)	*0.55* (14)	*0.51* (13)	*3.18* (81)	*3.42* (87)	*0.86* (22)	*0.59* (15)	*4.40* (112)	*3.36* (85,5)	*0.86* (22)	*0.59* (15)
R1/4-ISO7/1	22M								*2.12* (54)	*2.12* (54)	*0.55* (14)	*0.51* (13)								
G 3/8 B	31M												*3.38* (86)	*3.42* (87)	*0.86* (22)	*0.62* (16)	*4.44* (113)	*3.36* (85,5)	*0.86* (22)	*0.62* (16)
3/8-18 NPT	33M												*3.38* (86)	*3.42* (87)	*0.86* (22)	*0.62* (16)	*4.44* (113)	*3.36* (85,5)	*0.86* (22)	*0.62* (16)
G 1/2 B	41M												*3.38* (86)	*3.42* (87)	*0.86* (22)	*0.78* (20)	*4.6* (117)	*3.36* (85,5)	*0.86* (22)	*0.78* (20)
R 1/2-ISO 7/1	42M												*3.38* (86)	*3.42* (87)	*0.86* (22)	*0.78* (20)	*4.6* (117)	*3.36* (85,5)	*0.86* (22)	*0.78* (20)
1/2-14 NPT	43M												*3.38* (86)	*3.42* (87)	*0.86* (22)	*0.78* (20)	*4.6* (117)	*3.36* (85,5)	*0.86* (22)	*0.78* (20)
M 20 x 1,5	97M												*3.38* (86)	*3.42* (87)	*0.86* (22)	*0.78* (20)	*4.6* (117)	*3.36* (85,5)	*0.86* (22)	*0.78* (20)

(1) ch= *0.47* (12) if back connection

dimensions : *inches* (mm)

all stainless steel version, heavy work

MGS19

F	Cod.	DS 4" (100mm)				DS 6" (150mm)			
		h	p	ch	L	h	p	ch	L
G 1/4 B	21M	*3.11* (79)	*3.35* (85)	*0.87* (22)	*0.51* (13)	*4.33* (110)	*3.29* (83,5)	*0.87* (22)	*0.51* (13)
1/4-18 NPT	23M	*3.19* (81)	*3.43* (87)	*0.87* (22)	*0.59* (15)	*4.41* (112)	*3.37* (85,5)	*0.87* (22)	*0.59* (15)
G 3/8 B	31M	*3.39* (86)	*3.43* (87)	*0.87* (22)	*0.63* (16)	*4.45* (113)	*3.37* (85,5)	*0.87* (22)	*0.63* (16)
3/8-18 NPT	33M	*3.39* (86)	*3.43* (87)	*0.87* (22)	*0.63* (16)	*4.45* (113)	*3.37* (85,5)	*0.87* (22)	*0.63* (16)
G 1/2 B	41M	*3.39* (86)	*3.43* (87)	*0.87* (22)	*0.79* (20)	*4.61* (117)	*3.37* (85,5)	*0.87* (22)	*0.79* (20)
R 1/2-ISO 7/1	42M	*3.39* (86)	*3.43* (87)	*0.87* (22)	*0.79* (20)	*4.61* (117)	*3.37* (85,5)	*0.87* (22)	*0.79* (20)
1/2-14 NPT	43M	*3.39* (86)	*3.43* (87)	*0.87* (22)	*0.79* (20)	*4.61* (117)	*3.37* (85,5)	*0.87* (22)	*0.79* (20)
M 20 x 1,5	97M	*3.39* (86)	*3.43* (87)	*0.87* (22)	*0.79* (20)	*4.61* (117)	*3.37* (85,5)	*0.87* (22)	*0.79* (20)

dimensions : *inches* (mm)

MGS20

F	Cod.	DN *2.5"* (63mm)				DN *4"* (100mm)				DN 6" (150mm)			
		h	p	ch	L	h	p	ch (1)	L	h	p	ch (1)	L
G 1/8 B	11M	*2.08* (53)	*2.28* (58)	*0.55* (14)	*0.39* (10)								
1/8-18 NPT	13M	*2.08* (53)	*2.28* (58)	*0.55* (14)	*0.39* (10)								
G 1/4 B	21M	*2.16* (55)	*2.36* (60)	*0.55* (14)	*0.51* (13)	*3.11* (79)	*3.68* (93,5)	*0.87* (22)	*0.51* (13)	*4.33* (110)	*3.70* (94)	*0.87* (22)	*0.51* (13)
1/4-18 NPT	23M	*2.12* (54)	*2.32* (59)	*0.55* (14)	*0.51* (13)	*3.19* (81)	*3.76* (95,5)	*0.87* (22)	*0.59* (15)	*4.41* (112)	*3.78* (96)	*0.87* (22)	*0.59* (15)
G 3/8 B	31M					*3.39* (86)	*3.76* (95,5)	*0.87* (22)	*0.63* (16)	*4.45* (113)	*3.78* (96)	*0.87* (22)	*0.63* (16)
3/8-18 NPT	33M					*3.39* (86)	*3.76* (95,5)	*0.87* (22)	*0.63* (16)	*4.45* (113)	*3.78* (96)	*0.87* (22)	*0.63* (16)
G 1/2 B	41M					*3.39* (86)	*3.76* (95,5)	*0.87* (22)	*0.79* (20)	*4.61* (117)	*3.78* (96)	*0.87* (22)	*0.79* (20)
R 1/2-ISO 7/1	42M					*3.39* (86)	*3.76* (95,5)	*0.87* (22)	*0.79* (20)	*4.61* (117)	*3.78* (96)	*0.87* (22)	*0.79* (20)
1/2-14 NPT	23M					*3.39* (86)	*3.76* (95,5)	*0.87* (22)	*0.79* (20)	*4.61* (117)	*3.78* (96)	*0.87* (22)	*0.79* (20)
M 20 x 1,5	97M					*3.39* (86)	*3.76* (95,5)	*0.87* (22)	*0.79* (20)	*4.61* (117)	*3.78* (96)	*0.87* (22)	*0.79* (20)

(1) ch= *0.67* (17) for back connection

dimensions : *inches* (mm)

all stainless steel version,"solid-front" heavy work

MGS21

F	Cod.	DS 4" (100mm)				DS 6" (150mm)			
		h	p	ch[1]	L	h	p	ch[1]	L
G 1/4 B	21M	*3.11* (79)	*3.68* (93,5)	*0.87* (22)	*0.51* (13)	*4.33* (110)	*3.70* (94)	*0.87* (22)	*0.51* (13)
1/4-18 NPT	23M	*3.19* (81)	*3.76* (95,5)	*0.87* (22)	*0.59* (15)	*4.41* (112)	*3.78* (96)	*0.87* (22)	*0.59* (15)
G 3/8 B	31M	*3.39* (86)	*3.76* (95,5)	*0.87* (22)	*0.63* (16)	*4.45* (113)	*3.78* (96)	*0.87* (22)	*0.63* (16)
3/8-18 NPT	33M	*3.39* (86)	*3.76* (95,5)	*0.87* (22)	*0.63* (16)	*4.45* (113)	*3.78* (96)	*0.87* (22)	*0.63* (16)
G 1/2 B	41M	*3.39* (86)	*3.76* (95,5)	*0.87* (22)	*0.79* (20)	*4.61* (117)	*3.78* (96)	*0.87* (22)	*0.79* (20)
R 1/2-ISO 7/1	42M	*3.39* (86)	*3.76* (95,5)	*0.87* (22)	*0.79* (20)	*4.61* (117)	*3.78* (96)	*0.87* (22)	*0.79* (20)
1/2-14 NPT	43M	*3.39* (86)	*3.76* (95,5)	*0.87* (22)	*0.79* (20)	*4.61* (117)	*3.78* (96)	*0.87* (22)	*0.79* (20)
M 20 x 1,5	97M	*3.39* (86)	*3.76* (95,5)	*0.87* (22)	*0.79* (20)	*4.61* (117)	*3.78* (96)	*0.87* (22)	*0.79* (20)

(1) ch= *0.66* (17) if back connection

all stainless steel test gauge, accuracy 0,6%

MN15

F	Cod.	DS 6" (150mm)			
		h	p	ch	L
G 1/4 B	21M	*4.33* (110)	*3.29* (83,5)	*0.87* (22)	*0.51* (13)
1/4-18 NPT	23M	*4.41* (112)	*3.37* (85,5)	*0.87* (22)	*0.59* (15)
G 1/2 B	41M	*4.61* (117)	*3.37* (85,5)	*0.87* (22)	*0.79* (20)
1/2-14 NPT	43M	*4.61* (117)	*3.37* (85,5)	*0.87* (22)	*0.79* (20)

dimensions : *inches* (mm)

all stainless steel test gauge, "solid-front" accuracy 0,6...0,25%

MN16-MN25

F	Cod.	DS 6" (150mm)			
		h	p	ch	L
G 1/4 B [1]	21M	*4.33* (110)	*3.74* (95)	*0.87* (22) [2]	*0.51* (13)
1/4-18 NPT [1]	23M	*4.41* (112)	*3.82* (97)	*0.87* (22) [2]	*0.59* (15)
G 1/2 B	41M	*4.61* (117)	*3.82* (97)	*0.87* (22) [2]	*0.79* (20)
1/2-14 NPT	43M	*4.61* (117)	*3.82* (97)	*0.87* (22) [2]	*0.79* (20)

(1) only for bottom connection on MN25
(2) ch= *0.67* (17) for back connection

dimensions : *inches* (mm)

test gauge, "solid-front", accuracy 0,25%

MN17

F	Cod.	DS 6" (150mm)			
		h	p	ch	L
G 1/4 B	21M	*4.37* (111)	*3.76* (95,5)	*0.94* (24) [1]	*0.51* (13)
1/4-18 NPT	23M	*4.45* (113)	*3.84* (97,5)	*0.94* (24) [1]	*0.59* (15)
G 1/2 B	41M	*4.65* (118)	*3.84* (97,5)	*0.94* (24) [1]	*0.79* (20)
1/2-14 NPT	43M	*4.65* (118)	*3.84* (97,5)	*0.94* (24) [1]	*0.79* (20)

(1) ch= *0.67* (17) for back connection

dimensions : *inches* (mm)

NACE MR 01.03 version

MGS36

F	Cod.	DS 4" (100mm)				DS 6" (150mm)			
		h	p	ch	L	h	p	ch	L
G 1/2 B	41M	*3.39* (86)	*3.43* (87)	*0.87* (22)	*0.79* (20)	*4.61* (117)	*3.37* (85,5)	*0.87* (22)	*0.79* (20)
1/2-14 NPT	43M	*3.39* (86)	*3.43* (87)	*0.87* (22)	*0.79* (20)	*4.61* (117)	*3.37* (85,5)	*0.87* (22)	*0.79* (20)

dimensions : *inches* (mm)

NACE MR 01.03 version, "solid-front"

MGS40

F	Cod.	DS 4" (100mm)				DS 6" (150mm)			
		h	p	ch	L	h	p	ch	L
G 1/2 B	41M	*3.39* (86)	*3.76* (95,5)	*0.87* (22) (1)	*0.79* (20)	*4.61* (117)	*3.78* (96)	*0.87* (22) (1)	*0.79* (20)
1/2-14 NPT	43M	*3.39* (86)	*3.76* (95,5)	*0.87* (22) (1)	*0.79* (20)	*4.61* (117)	*3.78* (96)	*0.87* (22) (1)	*0.79* (20)

(1) ch= *0.67* (17) for back connection

dimensions : *inches* (mm)

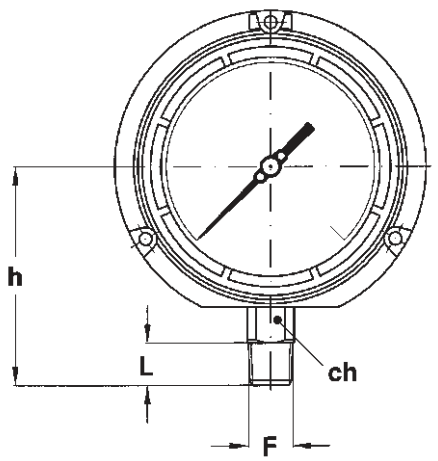

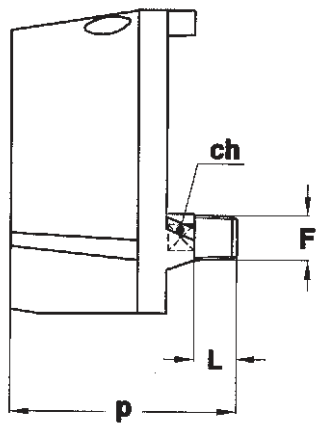

"solid-front" turret case

MGS30-MGS30X

F	Cod.	DS 4.5" (125mm)			
		h	p	ch	L
1/4-18 NPT	23M	*3.88* (98,5)	*3.98* (101)	*0.87* (22) (1)	*0.59* (15)
1/2-14 NPT	43M	*4.07* (103,5)	*4.17* (106)	*0.87* (22) (1)	*0.79* (20)

(1) ch= *0.67* (17) for back connection

dimensions : *inches* (mm)

NACE MR 01.03 version, "solid-front" turret case

MGS60

F	Cod.	DS 4.5" (125mm)			
		h	p	ch	L
1/4-18 NPT	23M	*3.88* (98,5)	*3.98* (101)	*0.87* (22) (1)	*0.59* (15)
1/2-14 NPT	43M	*4.07* (103,5)	*4.17* (106)	*0.87* (22) (1)	*0.79* (20)

(1) ch= *0.67* (17) for back connection

dimensions : *inches* (mm)

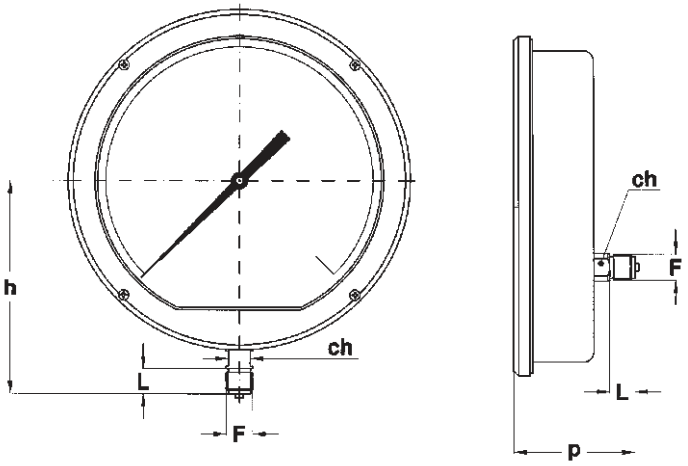

aluminium case

MGS8

F	Cod.	DS 10" (250mm)			
		h	p	ch	L
G 1/2 B	41M	*6.69* (170)	*3.72* (94,5)	*0.66* (17)(1)	*0.78* (20)
1/2-14 NPT	43M	*6.69* (170)	*3.72* (94,5)	*0.66* (17)(1)	*0.78* (20)

(1) ch= *0.87* (22) for back connection

dimensions : *inches* (mm)

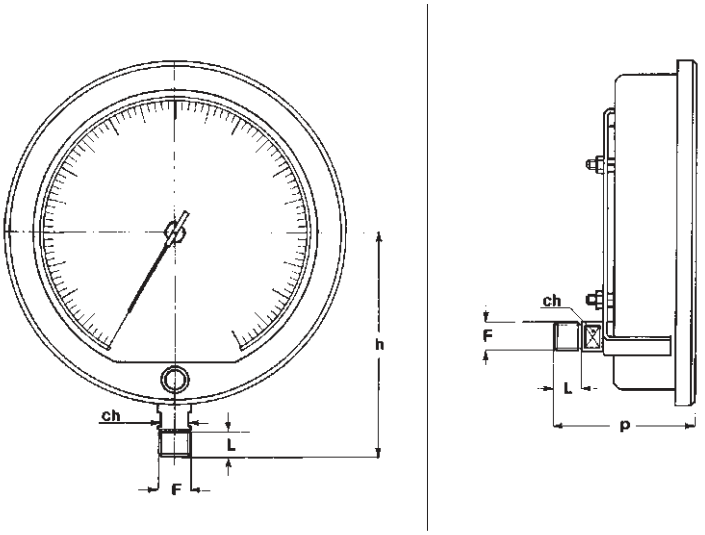

laboratory, accuracy 0,1%

MN17/L

F	Cod.	DS 10" (250mm)			
		h	p	ch	L
1/4-18 NPT	23M	*6.50* (165)	*4.39* (111,5)	*0.67* (17)	*0.59* (15)
G 1/2 B	41M	*6.69* (170)	*4.39* (111,5)	*0.67* (17)	*0.79* (20)
1/2-14 NPT	43M	*6.69* (170)	*4.39* (111,5)	*0.67* (17)	*0.79* (20)

dimensions : *inches* (mm)

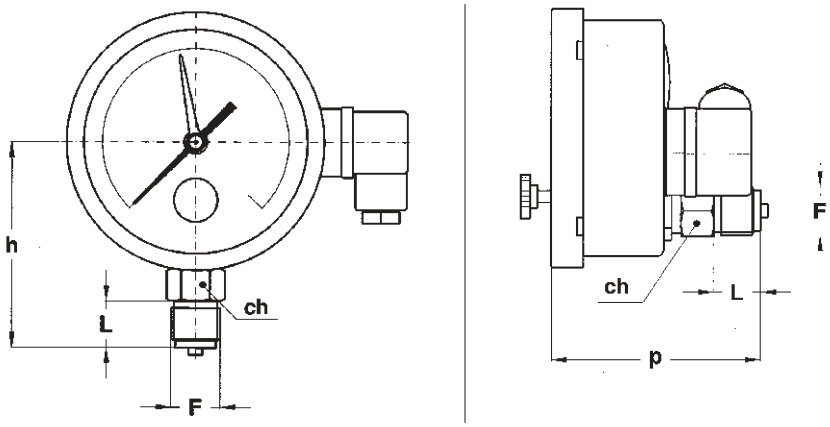

with microswitch

MGS72-74

F	Cod.	DS 4" (100mm)			
		h	p	ch	L
G 1/4 B	21M	*3.18* (81)	*3.27* (83)	*0.87* (22)	*0.51* (13)
1/4-18 NPT	23M	*3.26* (83)	*3.35* (85)	*0.87* (22)	*0.59* (15)
G 3/8 B	31M	*3.30* (84)	*3.39* (86)	*0.87* (22)	*0.63* (16)
3/8-18 NPT (1)	33M	*3.30* (84)	*3.39* (86)	*0.87* (22)	*0.63* (16)
G 1/2 B	41M	*3.46* (88)	*3.54* (90)	*0.87* (22)	*0.79* (20)
1/2-14 NPT	43M	*3.46* (88)	*3.54* (90)	*0.87* (22)	*0.79* (20)

(1) available for MGS72 only

dimensions : *inches* (mm)

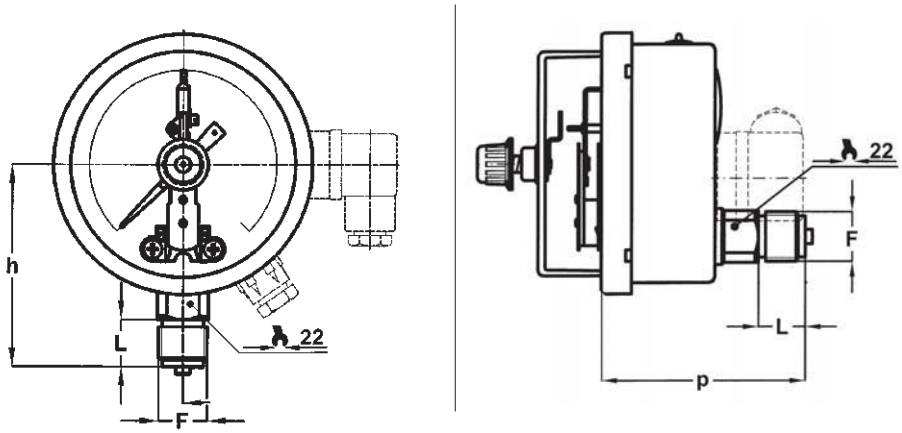

with electric contacts

MN14/10-18

F	Cod.	DS 4" (100mm)						DS 6" (150mm)					
		h(1)	h(2)	p(1)	p(2)	ch	L	h(1)	h(2)	p(1)	p(2)	ch	L
G 1/4 B	21M	*3.19* (81)	*3.11* (79)	*3.26* (83)	*3.34* (85)	*0.87* (22)	*0.51* (13)		*4.33* (110)	*3.22* (82)	*3.28* (83,5)	*0.87* (22)	*0.51* (13)
1/4-18 NPT	23M	*3.26* (83)	*3.19* (81)	*3.34* (85)	*3.42* (87)	*0.87* (22)	*0.59* (15)	*4.41* (112)	*4.41* (112)	*3.30* (84)	*3.36* (85,5)	*0.87* (22)	*0.59* (15)
G 1/2 B	41M	*3.46* (88)	*3.39* (86)	*3.54* (90)	*3.42* (87)	*0.87* (22)	*0.79* (20)	*4.61* (117)	*4.61* (117)	*3.50* (89)	*3.36* (85,5)	*0.87* (22)	*0.79* (20)
R 1/2-ISO 7/1	42M	*3.46* (88)	*3.39* (86)	*3.54* (90)	*3.42* (87)	*0.87* (22)	*0.79* (20)		*4.61* (117)	*3.50* (89)	*3.36* (85,5)	*0.87* (22)	*0.79* (20)
1/2-14 NPT	43M	*3.46* (88)	*3.39* (86)	*3.54* (90)	*3.42* (87)	*0.87* (22)	*0.79* (20)	*4.61* (117)	*4.61* (117)	*3.50* (89)	*3.36* (85,5)	*0.87* (22)	*0.79* (20)
M 20 x 1,5	97M	*3.46* (88)	*3.39* (86)	*3.54* (90)	*3.42* (87)	*0.87* (22)	*0.79* (20)		*4.61* (117)	*3.50* (89)	*3.36* (85,5)	*0.87* (22)	*0.79* (20)

(1) MN14/10; (2) MN14/18

dimensions : *inches* (mm)

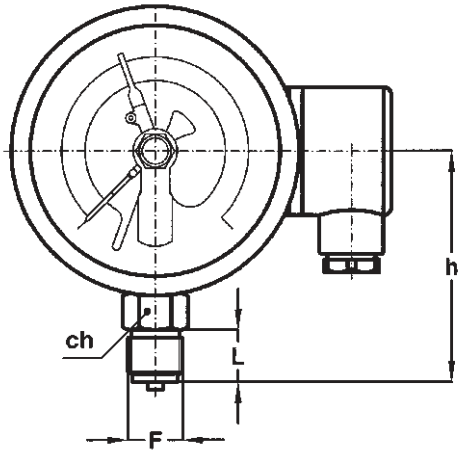

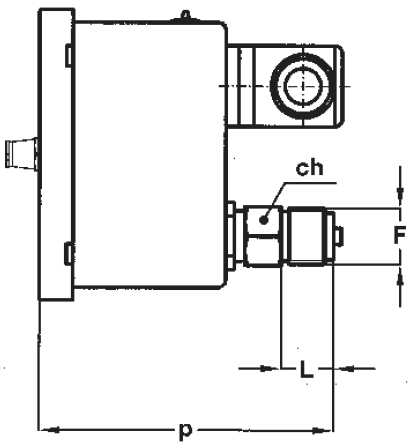

with electric contact

MCE10-18 MCE10-18/SF$_6$

F	Cod.	DS 4" (100mm)			
		h	p	ch	L
G 1/4 B	21M	*3.18* (81)	*4.21...4.61* (107...117)	*0.87* (22)	*0.51* (13)
1/4-18 NPT	23M	*3.26* (83)	*4.29...4.69* (109...119)	*0.87* (22)	*0.59* (15)
G 1/2 B	41M	*3.46* (88)	*4.49...4.88* (114...124)	*0.87* (22)	*0.79* (20)
1/2-14 NPT	43M	*3.46* (88)	*4.49...4.88* (114...124)	*0.87* (22)	*0.79* (20)

dimensions : *inches* (mm)

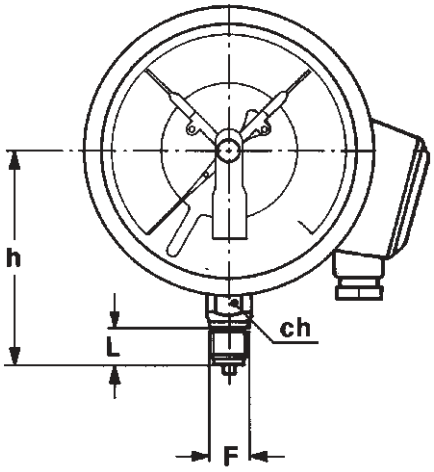

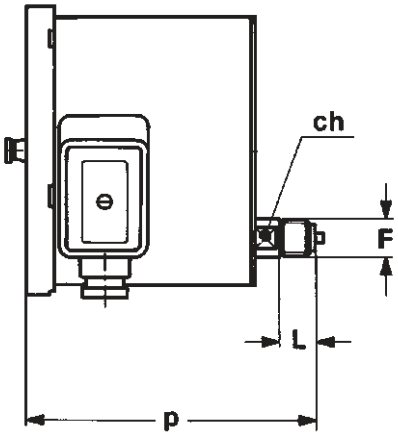

with electric contact

MCE20

F	Cod.	DS 6" (150mm)			
		h	p	ch	L
G 1/4 B (2)	21M	*4.33* (110)	*6.22* (158)	*0.87* (22)	*0.51* (13)
1/4-18 NPT (2)	23M	*4.41* (112)	*6.30* (160)	*0.87* (22)	*0.59* (15)
G 1/2 B	41M	*4.61* (117)	*6.30* (160)	*0.87* (22) (1)	*0.79* (20)
1/2-14 NPT	43M	*4.61* (117)	*6.30* (160)	*0.87* (22) (1)	*0.79* (20)

(1) ch= *0.67* (17) for back connection
(2) for bottom connection only

dimensions : *inches* (mm)

IN ORDER TO IMPROVE THEIR PRODUCTION, MESSRS. NUOVA FIMA RESERVE THE RIGHT TO THEMSELVES TO MAKE ALL THE MODIFICATIONS THAT THEY DEEM INDISPENSABLE AT ANY TIME. UPDATED DATA-SHEETS ARE AVAILABLE ON SITE: www.nuovafima.com

Copyright © Nuova Fima srl. All rights reserved. Any part of this publication should not be reproduced without a written Nuova Fima's srl approval

NUOVA FIMA USA Inc.
www.nuovafima.com - e-mail: infousa@nuovafima.com
4123 Hollister, Suite G - TX 77080 Houston
TEL. +1 713.690.9800 - FAX +1 713.690.9803

NUOVA FIMA srl
www.nuovafima.com - e-mail: info@nuovafima.com
P.O. BOX 58 - VIA C. BATTISTI 59 - 28045 INVORIO (NO) ITALY
TEL. +39 0322 253200 - FAX +39 0322 253232

ELECTRIC CONTACT

for bourdon tube pressure gauges and temperature gauges

Sliding contacts

The electrical sliding contacts guarantee an accurate operation within a controlled hysteresis. However they are rather sensitive to vibration, moreover, very slow pressure changes may cause an electric arc which can reduce its working life.

Functional and constructive characteristics

Set-point accuracy: 150% of instrument accuracy.
Set-point hysteresys: 0,3% of full scale value.
Break rating: 10W/18VA.
Maximum rating: 250Vac/0,7A (ohmic load).
Contact material: Silver-Nickel 80/20%, gold plated.
Contact setting: over an arc of 270°, by a fixed key fitted to the front lens or by a removable key.
Electrical wiring: junction box with cable exit, as per instrument data-sheet.

LOAD RATINGS (1)

Volt	DC	AC	Inductive load
220	40 mA	45 mA	25 mA
110	80 mA	90 mA	45 mA
48	120 mA	170 mA	70 mA
24	200 mA	350 mA	100 mA

Minimum values : 24V/20mA/0,4W/4VA.

(1) as per DIN 16085.

Magnetic Snap-Action Contacts

This type of contact is universally used to guarantee the reliable operation of gauges under severe vibration. The magnetic action is guaranteed by a "click operation", which improves contact capacity, life and is less sensitive to vibration. The required power to overcome the magnetic resistance causes an hysteresis at set-point between 2% to 5% of full scale value (from 4% to 10% of full scale value for double contacts).

Functional and constructive characteristics

Set-point accuracy: 150% of instrument accuracy.
Set-point hysteresys: 2...5% of full scale value.
Break rating: 30W/50VA (20W/20VA for filled version).
Maximum rating: 250Vac/1A (ohmic load).
Contact material: Silver-Nickel 80/20%, gold plated.
Contact setting: from 10% to 90% of scale value by a fixed key fitted to the front lens or by a removable key.
Electrical wiring: junction box with cable exit, as per instrument data-sheet.

LOAD RATINGS (1)

Volt	DC	AC	Inductive load
220	100 mA	120 mA	65 mA
110	200 mA	240 mA	130 mA
48	300 mA	450 mA	200 mA
24	400 mA	600 mA	250 mA

Minimum values : 24V/20mA/0,4W/4VA.

Dielectric silicone oil filled pressure gauges

Volt	CC	CA	Inductive load
220	65 mA	90 mA	40 mA
110	130 mA	180 mA	85 mA
48	190 mA	330 mA	130 mA
24	250 mA	450 mA	150 mA

Minimum values : 24V/20mA/0,4W/4VA.

CONTROL RELAYS

We recommand the use of control relays as they increase the working life of all types of contacts. For intrinsecally safe applications an approppriate barrier must be used.

ELECTRIC CONTACT

WIRING SCHEME (1)	ELECTRIC SCHEME (before set)	CLOCKWISE MOVEMENT OF THE POINTER CAUSES:	CONTACT CODE	
			sliding	magnetic snap-action
SINGLE CONTACT				
MINI 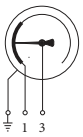	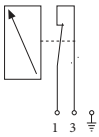	Opening	01S	M1S
MAXI 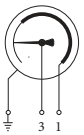	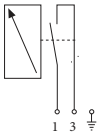	Closing	02S	M2S
DOUBLE CONTACT (2)				
1° MINI 2° MAXI	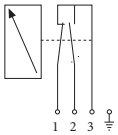	Opening 1 Closing 2	01D	M1D
1° MAXI 2° MAXI	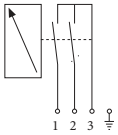	Closing 1 Closing 2	02D	M2D
1° MAXI 2° MINI	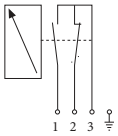	Closing 1 Opening 2	03D	M3D
1° MINI 2° MINI	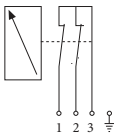	Opening 1 Opening 2	04D	M4D
INDEPENDENT DOUBLE CONTACT (2)				
1° MINI 2° MAXI	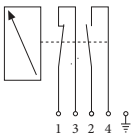	Opening 1 Closing 2	08D	M8D
1° MAXI 2° MAXI	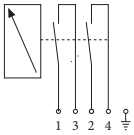	Closing 1 Closing 2	09D	M9D

(1) The above numbers are the same of those stamped on the junction box.
(2) Each contact must not exceed the next one.

IN ORDER TO IMPROVE THEIR PRODUCTION, MESSRS. NUOVA FIMA RESERVE THE RIGHT TO THEMSELVES TO MAKE ALL THE MODIFICATIONS THAT THEY DEEM INDISPENSABLE AT ANY TIME. UPDATED DATA-SHEET'S ARE AVAILABLE ON SITE: **www.nuovafima.com**

Copyright © Nuova Fima srl. All rights reserved. Any part of this publication should not be reproduced without a written Nuova Fima's srl approval

NUOVA FIMA USA Inc.
www.nuovafima.com - e-mail: infousa@nuovafima.com
4123 Hollister, Suite G - TX 77080 Houston
TEL. +1 713.690.9800 - FAX +1 713.690.9803

NUOVA FIMA srl
www.nuovafima.com - e-mail: info@nuovafima.com
P.O. BOX 58 - VIA C. BATTISTI 59 - 28045 INVORIO (NO) ITALY
TEL. +39 0322 253200 - FAX +39 0322 253232

Electronic contacts with PNP output

Switching accuracy: 1,5 times the instrument accuracy.
Switching hysteresis: 0,3...1% of full scale value.
Adjustement: over an arc of 270 °, through the knob placed on front lens or through removable key.
Supply: 10...30 Vdc.
Switching current: max 100 mA
Temperature range: -25...+65°C

Electronic contacts are equipped with electrical distance sensors (proximity sensors). The output signal is governed by the presence or absence of a control vane moved by the actual value pointer in the magnetic field of the proximity sensor.
The switching behaviour of the PNP switches used in these contacts is normally defined as a "closer" (opposite to the inductive contacts).

Due to their proximity type of switching, respect to the traditional sliding contact they offer better switching accuracy and extended service life.
They are properly designed to switch small DC load and so particularly suitable for a **direct wiring to PLC / PC** direct input and to trigger optoelectronic coupler.
Also they are the best preference for oil filled instruments to be installed in the most severe operating conditions created by the ambient environments.

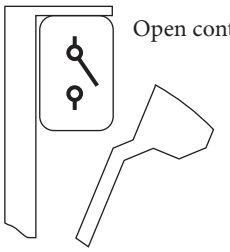

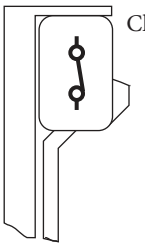

WIRING SCHEME (1)	ELECTRIC SCHEME (before set)	CLOCKWISE MOVEMENT OF THE POINTER CAUSES:	CONTACT CODE
SINGLE CONTACT			
MAXI 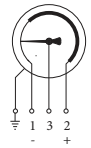	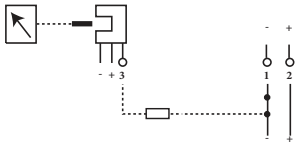	Closing	E1
MINI 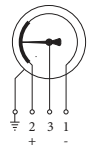	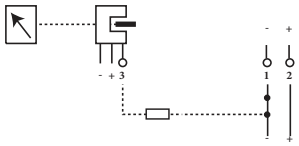	Opening	E2
DOUBLE CONTACT (2)			
1° MAXI 2° MAXI	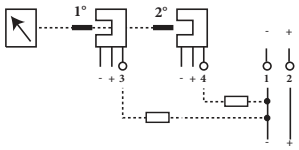	Closing 1 Closing 2	E11
1° MAXI 2° MINI 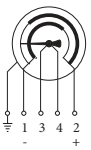	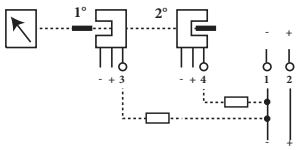	Closing 1 Opening 2	E12
1° MINI 2° MAXI 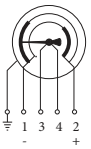	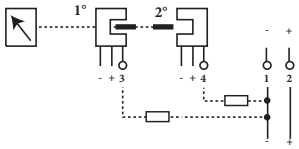	Opening 1 Closing 2	E21
1° MINI 2° MINI	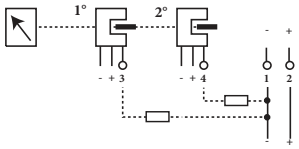	Opening 1 Opening 2	E22

INDUCTIVE CONTACTS

RC2 - 07/15

Inductive contacts are intrinsically safe and ATEX certified to EN 50014, EN 50020, EN 50284, IEC 61241-11 normes, with protection degree EEX ia IIC T6. They are incorporated in gauges and thermometers belonging to the group II with category 2GD and construction security protection "c". They are suitable to be installed in zones 1,2,22. To guarantee such protection degree the contacts must be supplied via a control relay which has the same type of certificate. When mounted on instruments with liquid filled case they are particularly suitable for application on chemical and petrochemical plants with vibrations and frequent operation.

Functional and constructive characteristics

Set-point accuracy: 150% of instrument accuracy.
Set-point hysteresys: 0,3...1% of full scale value.
Contact setting: over an arc of 270 °, trough the knob placed on front lens or trough removable key.
Electricla wiring: junction box as per VDE, see underdraw table.

Closed contact

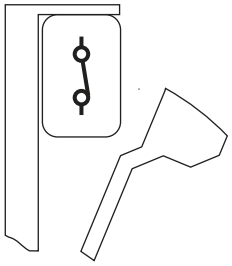

Open contact

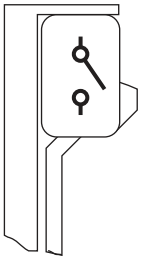

WIRING SCHEME (1)	ELECTRIC SCHEME (before set)	CLOCKWISE MOVEMENT OF THE POINTER CAUSES:	EX-CONTACT CODE
SINGLE CONTACT			
MINI 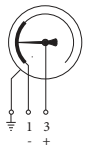	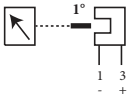	Insertion of control flag into control head and **Opening**	**B1**
MAXI 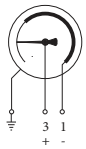	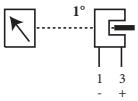	Release of control flag from control head and **Closing**	**B2**
DOUBLE CONTACT (2) (3)			
1° MINI 2° MAXI	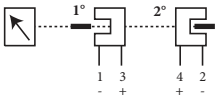	Insertion of control flag into control head n. 1, release of control flag from control head n. 2 and **Opening 1** **Closing 2**	**B12**
1° MAXI 2° MAXI	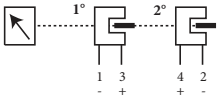	Insertion of control flags into control heads **Closing 1-2**	**B22**

(1) The above numbers are the same of those stamped on the junction box.
(2) Each contact must not exceed the next one.
(3) Other electric contacts are available upon request.

Copyright © Nuova Fima srl. All rights reserved. Any part of this publication should not be reproduced without a written Nuova Fima's srl approval

IN ORDER TO IMPROVE THEIR PRODUCTION, MESSRS. NUOVA FIMA RESERVE THE RIGHT TO THEMSELVES TO MAKE ALL THE MODIFICATIONS THAT THEY DEEM INDISPENSABLE AT ANY TIME. UPDATED DATA-SHEETS ARE AVAILABLE ON SITE: **www.nuovafima.com**

NUOVA FIMA USA Inc.
www.nuovafima.com - e-mail: infousa@nuovafima.com
4123 Hollister, Suite G - TX 77080 Houston
TEL. +1 713.690.9800 - FAX +1 713.690.9803

NUOVA FIMA srl
www.nuovafima.com - e-mail: info@nuovafima.com
P.O. BOX 58 - VIA C. BATTISTI 59 - 28045 INVORIO (NO) ITALY
TEL. +39 0322 253200 - FAX +39 0322 253232

MGS18-19-36

bourdon tube pressure gauges
all stainless steel construction
ATEX versions,
DS 4", 6" (100-150mm)

These instruments are designed for explosive atmospheres in food, processing, pharmaceutical, petrochemical industries and conventional and nuclear power plants. The MGS pressure gauges are in conformity with the essential Health and Safety Requirements laid down in European Directive 2014/34/UE for Group II, Category 2G or 2GD equipment in the T1...T6 temperature classes, as specified by EN 13463-1:2009 and EN 13463-5:2011 standards. They are NOT suitable for ZONES 0 and 20.

2G1 Version , Gas

4" and 6" (DS 100-150 mm) sizes are available, as **standard** version, or **fillable** version for pressure ranges ≤ 6 bar.

They keep the same functional and constructive features as MGS18-19-36 models. They differ from them as follows :

Ambient temperature: ***-22...+140 °F*** (-30...+60 °C).
Max process fluid temperature: see table (measured on the lowest point of socket).
Protection degree: IP 55 as per EN 60529/IEC 529.
Windows: high resistance safety glass.
Socket: with restrictor.
Dial marking: CE Ex II 2G c TX X, year of manufacture, model name and serial number.
Special dial: ranges different from standard, custom artworks and dials without Nuova Fima logo are not available.
Options: plexiglas or tempered glass windows are not available.
Included documentation: Installation manual.

Class	Instrument case	
	dry	filled
T6 : *185°F* (85°C)	*158°F* (70°C)	*149°F* (65°C)
T5 : *212°F* (100°C)	*185°F* (85°C)	
T4 : *275°F* (135°C)	*248°F* (120°C)	
T3 : *392°F* (200°C)	*302°F* (150°C)	
T2 : *572°F* (300°C)		
T1 : *842°F* (450°C)		

2D1 Version , Gas and Dust

4" and 6" (DS 100-150 mm) are available, as **fillable** version for pressure ranges > 6 bar, or **filled** version.

They keep the same functional and constructive features as MGS18-19-36 models. They differ from them as follows :

Damping liquids: glycerine 98%, silicon oil.
Ambient temperature:
+32...+140 °F (+0...+60 °C) for glycerine filling;
-22...+140 °F (-30...+60 °C) for silicon oil filling.
Max process fluid temperature: see table (measured on the lowest point of socket).
Protection degree: IP 65 as per EN 60529/IEC 529.
Windows: high resistance safety glass.
Socket: with restrictor.
Dial marking: CE Ex II 2GD c TX X, year of manufacture, model name and serial number.
Special dial: ranges different from standard, custom artworks and dials without Nuova Fima logo are not available.
Options: plexiglas or tempered glass windows are not available.
Included documentation: Installation manual.

MGS20-21-40

safety pressure gauges "solid-front" all stainless steel ,construction ATEX versions, DS 4", 6" (100-150mm)

These instruments are designed for explosive atmospheres in food, processing, pharmaceutical, petrochemical industries and conventional and nuclear power plants. The MGS pressure gauges are in conformity with: to the essential Health and Safety Requirements laid down in European Directive 2014/34/UE for Group II, Category 2G or 2GD equipment in the T1...T6 temperature classes, as specified by EN 13463-1:2009 and EN 13463-5:2011 standards; and to construction and safety specifications of **EN 837-1/S3** e **ASME B40.1**. In case of leaks or break of the elastic element, the operator is protected by a solid separating wall placed on the front of the instrument and by the blow out back. They are NOT suitable for ZONES 0 and 20.

2G1 Version , Gas

4" and 6" (DS 100-150 mm) sizes are available, as **standard** version, or **fillable** version for pressure ranges ≤ 6 bar.

They keep the same functional and constructive features as MGS20-21-40 models. They differ from them as follows :

Ambient temperature: ***-22...+140 °F*** (-30...+60 °C).
Max process fluid temperature: see table (measured on the lowest point of socket).
Protection degree: IP 55 as per EN 60529/IEC 529.
Windows: high resistance safety glass.
Socket: with restrictor.
Dial marking: CE Ex II 2G c TX X, year of manufacture, model name and serial number.
Special dial: ranges different from standard, custom artworks and dials without Nuova Fima logo are not available.
Options: compensating devices, plexiglas or tempered glass windows are not available.
Included documentation: Installation manual.

Class	Instrument case	
	dry	filled
T6 : *185°F* (85°C)	*158°F* (70°C)	*149°F* (65°C)
T5 : *212°F* (100°C)	*185°F* (85°C)	
T4 : *275°F* (135°C)	*248°F* (120°C)	
T3 : *392°F* (200°C)	*302°F* (150°C)	
T2 : *572°F* (300°C)		
T1 : *842°F* (450°C)		

2D1 Version , Gas and Dust

4" and 6" (DS 100-150 mm) are available, as **fillable** version for pressure ranges > 6 bar, or **filled** version, .

They keep the same functional and constructive features as MGS20-21-40 models. They differ from them as follows :

Damping liquids: glycerine 98%, silicon oil or fluorinated fluid.
Ambient temperature:
+32...+140 °F (+0...+60 °C) for glycerine filling;
-22...+140 °F (-30...+60 °C) for silicon oil or fluorinated fluid filling.
Max process fluid temperature: see table (measured on the lowest point of socket).
Protection degree: IP 65 as per EN 60529/IEC 529.
Windows: high resistance safety glass.
Socket: with restrictor.
Dial marking: CE Ex II 2GD c TX X, year of manufacture, model name and serial number.
Special dial: ranges different from standard, custom artworks and dials without Nuova Fima logo are not available.
Options: compensating devices, plexiglas or tempered glass windows are not available.
Included documentation: Installation manual.

Technical File: TF1 - Rev. 3

NUOVA FIMA USA Inc.
www.nuovafima.com - e-mail: infousa@nuovafima.com
4123 Hollister, Suite G - TX 77080 Houston
TEL. +1 713.690.9800 - FAX +1 713.690.9803

NUOVA FIMA srl
www.nuovafima.com - e-mail: info@nuovafima.com
P.O. BOX 58 - VIA C. BATTISTI 59 - 28045 INVORIO (NO) ITALY
TEL. +39 0322 253200 - FAX +39 0322 253232

RC4 041/16
IN ORDER TO IMPROVE THEIR PRODUCTION, MESSRS. NUOVA FIMA RESERVE THE RIGHT TO THEMSELVES TO MAKE ALL THE MODIFICATIONS THAT THEY DEEM INDISPENSABLE AT ANY TIME. UPDATED DATA-SHEETS ARE AVAILABLE ON SITE: www.nuovafima.com

NUOVA FIMA S.r.l.
P.O. BOX 58 Via Cesare Battisti, 59
28045 Invorio (NO) Italy
Tel. +39 0322.253200
Fax +39 0322.253232
info@nuovafima.com

www.nuovafima.com

SPECIAL PRESSURE GAUGE

NUOVA FIMA

MN9

capsule pressure gauges
DS 2.5" (63mm)

PED 2014/68/UE

For measurement of low pressure and vacuum, for use on gas and dry air.

2.09.1 - MN9 DN63

Design: EN 837-3.
Ranges: *from 0...24 to 0...600 INWC (*from 0...60 mbar to 0...600 mbar), vacuum and combined vacuum/pressure (or equivalent units).
Accuracy class: 1.6 as per EN 837-3.
Ambient temperature: *-13...+149 °F* (-25...+65 °C).
Process fluid temperature: *+212 °F*; (+100 °C).
Thermal drift: ±0,4 %/10 °C of range (starting from *68°F* - 20°C).
Working pressure: max 75% of FSV.
Over pressure limit: 25% of FSV.
Protection degree: IP 55 as per EN60529/IEC 529.
Socket material: copper alloy, nickel plated.
Elastic element: copper alloy.
Case: stainless steel.
Ring: stainless steel polished, crimped.
Window: plastic.
Movement: copper alloy.
Dial: aluminium, white with black markings.
Pointer: aluminium.
Zero adjustment: external.

0...60 mbar
0...100 mbar
0...160 mbar
0...250 mbar
0...400 mbar
0...600 mbar

-60...0 mbar
-100...0 mbar
-160...0 mbar
-250...0 mbar
-400...0 mbar
-600...0 mbar

-20...40 mbar
-40...20 mbar
-40...60 mbar
-60...40 mbar
-60...100 mbar
-100...60 mbar
-100...150 mbar
-150...100 mbar
-150...250 mbar
-250...150 mbar
-200...400 mbar
-400...200 mbar

RC4 - 12/15

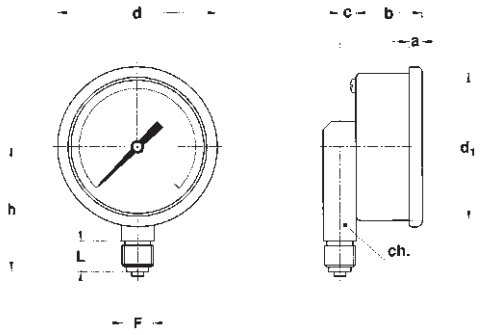

A - LOWER CONNECTION

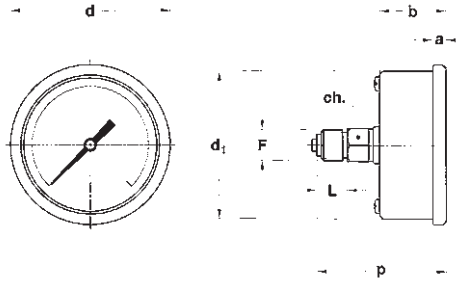

D - BACK CONNECTION

Mounting	DN	F	a	b	c	d	d_1	h	p	L	ch	Weight : *lbs* (kg)
Lower	C *2.5"* (63 mm)	23M 1/4-18 NPT	*0.22* (5,6)	*1.10* (28)	*0.28* (7)	*2.68* (68)	*2.46* (62,6)	*2.09* (53)		*0.51* (13)	*0.55* (14)	*0.46* (0,21)
Back	C *2.5"* (63 mm)		*0.22* (5,6)	*1.10* (28)		*2.68* (68)	*2.46* (62,6)		*2.12* (53,8)	*0.51* (13)	*0.55* (14)	*0.39* (0,18)

dimensions : *inches* (mm)

OPTIONS

B -	"U"-clamp, for back connection pressure gauges
E -	Front flange, for back connection pressure gauges

"HOW TO ORDER" SEQUENCE

Section / Model / Case / Mounting / Diameter / Range / Process connection / Options

2	**09**	**1**	**A**	**C**	**21M**	**B, E**
			D		**23M**	

Copyright © Nuova Fima srl. All rights reserved. Any part of this publication should not be reproduced without a written Nuova Fima's srl approval

IN ORDER TO IMPROVE THEIR PRODUCTION, MESSRS. NUOVA FIMA RESERVE THE RIGHT TO THEMSELVES TO MAKE ALL THE MODIFICATIONS THAT THEY DEEM INDISPENSABLE AT ANY TIME. UPDATED DATA-SHEETS ARE AVAILABLE ON SITE: www.nuovafima.com

NUOVA FIMA USA Inc.
www.nuovafima.com - e-mail: infousa@nuovafima.com
4123 Hollister, Suite G - TX 77080 Houston
TEL. +1 713.690.9800 - FAX +1 713.690.9803

NUOVA FIMA srl
www.nuovafima.com - e-mail: info@nuovafima.com
P.O. BOX 58 - VIA C. BATTISTI 59 - 28045 INVORIO (NO) ITALY
TEL. +39 0322 253200 - FAX +39 0322 253232

capsule pressure gauges
DS 4", 6" (100-150mm)

PED 2014/68/UE

For measurement of low pressure and vacuum within the range -600...0 to 0...600 mbar, for use on gas and dry air.

2.09.1 - Standard Model MN9 DS *4"* (100mm)

Design: EN 837-3.
Ranges: *from 0...10 to 0...240 INWC* (from 0...25 to 0...600 mbar), vacuum and combined vacuum/pressure (or equivalent units).
Accuracy class: 1.6 as per EN 837-3.
Ambient temperature: *-13...+149 °F* (-25...+65 °C).
Process fluid temperature: *+149°F* (+65 °C).
Working pressure: max 75% of FSV.
Over pressure limit: 25% of FSV.
Protection degree: IP 55 as per EN 60529/IEC 529.
Socket material: stainless steel.
Elastic element: copper alloy capsule.
Case: stainless steel.
Ring: stainless steel, bayonet lock.
Window: tempered glass.
Movement: copper alloy.
Dial: aluminium, white with black markings.
Pointer: aluminium.
Zero adjustment: internal, on dial.

0...2,5 mbar (1)
0...4 mbar (1)
0...6 mbar (1)
0...10 mbar (1)
0...16 mbar (1)
0...25 mbar
0...40 mbar
0...60 mbar
0...100 mbar
0...160 mbar
0...250 mbar
0...400 mbar
0...600 mbar

-2,5...0 mbar (1)
-4...0 mbar (1)
-6...0 mbar (1)
-10...0 mbar (1)
-16...0 mbar (1)
-25...0 mbar
-40...0 mbar
-60...0 mbar
-100...0 mbar
-160...0 mbar
-250...0 mbar
-400...0 mbar
-600...0 mbar

-1...1,5 mbar (1)
-1,5...1 mbar (1)
-1...3 mbar (1)
-2...2 mbar (1)
-3...1 mbar (1)
-2...4 mbar (1)
-4...2 mbar (1)
-3...3 mbar (1)
-4...6 mbar (1)
-6...4 mbar (1)
-5...5 mbar (1)
-6...10 mbar (1)
-10...6 mbar (1)
-10...15 mbar
-15...10 mbar
-15...25 mbar
-25...15 mbar
-20...40 mbar
-40...20 mbar
-40...60 mbar
-60...40 mbar
-60...100 mbar
-100...60 mbar
-100...150 mbar
-150...100 mbar
-150...250 mbar
-250...150 mbar
-200...400 mbar
-400...200 mbar

(1) for DS *6"* (150mm)

2.10.1 - "All stainless steel" Model MN9/18 DS *4", 6"* (100-150mm)

Ranges: *from 0...10 to 0...240 INWC* (from 0...25 to 0...600 mbar), vacuum and combined vacuum/pressure, or equivalent units for DS *4"* (100mm); *from 0...1 to 0...240 INWC* (from 0...2,5 to 0...600 mbar), vacuum and combined vacuum/pressure, or equivalent units for DS *6"* (150mm).
Process fluid temperature: *+212 °F* (+100 °C).
Socket material: AISI 316L st.st.
Elastic element: AISI 316 Ti (1.4571) st.st. capsule.
Other features: as MN9 DS *4"* (100mm).

RC5 - 12/15

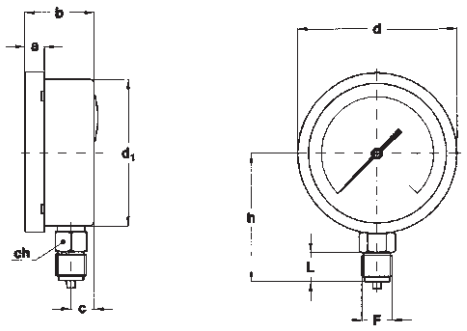

A - LOWER CONNECTION

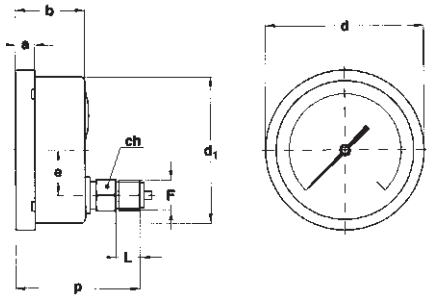

D - BACK CONNECTION

Mounting	DN	F	a	b	c	d	d_1	e	h	p	L	ch	Weight : lbs (kg)
Lower	**E** 4" (100mm)	**41M** G 1/2 A	*0.51* (13)	*1.91* (48,6)	*0.63* (16,1)	*4.35* (110,6)	*3.97* (101)		*3.39* (86)		*0.78* (20)	*0.87* (22)	*1.14* (0,52)
Lower	**G** 6" (150mm)		*0.59* (15)	*1.96* (50,5)	*0.65* (16,5)	*6.33* (161)	*5.88* (149,6)		*3.39* (86)		*0.78* (20)	*0.87* (22)	*2.20* (1)
Back	**E** 4" (100mm)	**43M** 1/2-14 NPT	*0.51* (13)	*1.91* (48,6)		*4.35* (110,6)	*3.97* (101)	*1.22* (31)		*3.42* (86,8)	*0.78* (20)	*0.87* (22)	*1.25* (0,57)
Back	**G** 6" (150mm)		*0.59* (15)	*1.96* (50,5)		*6.33* (161)	*5.88* (149,6)	*1.22* (31)		*3.42* (86,8)	*0.78* (20)	*0.87* (22)	*1.98* (0,9)

dimensions : mm

OPTIONS

MODEL	MN9	MN9/18
C40 - AISI 316L st. st. case and ring		◆
K10 - Accuracy class 1 (only for ≥ 25 mbar range)		◆
MIX - Stainless steel movement		◆
B - "U"-clamp, for back connection pressure gauges	◆	◆
C - Back flange, for lower connection pressure gauges	◆	◆
E - Front flange, for back connection pressure gauges	◆	◆
T32 - Window glass	◆	◆

"HOW TO ORDER" SEQUENCE

Section / Model / Case / Mounting / Diameter / Range / Process connection / Options

2	**09**	**1**	**A**	**E**	**41M**	**B...E**
	10		**D**	**G**	**43M**	**C40...T32**

Copyright © Nuova Fima srl. All rights reserved. Any part of this publication should not be reproduced without a written Nuova Fima's srl approval

IN ORDER TO IMPROVE THEIR PRODUCTION, MESSRS. NUOVA FIMA RESERVE THE RIGHT TO THEMSELVES TO MAKE ALL THE MODIFICATIONS THAT THEY DEEM INDISPENSABLE AT ANY TIME. UPDATED DATA-SHEETS ARE AVAILABLE ON SITE: **www.nuovafima.com**

NUOVA FIMA USA Inc.
www.nuovafima.com - e-mail: infousa@nuovafima.com
4123 Hollister, Suite G - TX 77080 Houston
TEL. +1 713.690.9800 - FAX +1 713.690.9803

NUOVA FIMA srl
www.nuovafima.com - e-mail: info@nuovafima.com
P.O. BOX 58 - VIA C. BATTISTI 59 - 28045 INVORIO (NO) ITALY
TEL. +39 0322 253200 - FAX +39 0322 253232

MN12/18

diaphragm pressure gauge
DS 4", 6" (100-150mm)
threaded connection

The sensing element is an elastic diaphragm, with concentric corrugations that drives the amplifying movement through a ball-joint. They are designed to measure pressure or vacuum of viscous, sedimentous, crystallisable or corrosive fluids. Compared to the bourdon tube system they are more robust and are better able to withstand overpressure or aggressive fluids.

2.42.1 - MN12/18

Design: EN 837-3.
Ranges: *from 0...10 INWC to 0...360 psi,* (from 0...25 mbar to 0...25 bar), vacuum and combined vacuum/pressure (or equivalent units).
Accuracy class: 1,6 as per EN 837-3 (1,0 as per EN 837-3 on request).
Ambient temperature: *-22...+149°F* (-40...+65 °C).
Process temperature: max. *+212°F*; +100 °C.
Working pressure: max 75% of the full scale value.
Overpressure limit: 25% of the full scale value.
Thermal drift: ±0,6% every ±10°C of ambient temperature.
Protection: IP 55 as per EN 60529/IEC 529.
Process connection: AISI 316L st.st.
Elastic element: AISI 316 Ti st.st. diaphragm.
Diaphragm gasket: PTFE.
Case: acciaio inox st.st.
Ring: acciaio inox st.st., bayonet lock.
Window: tempered glass (with external zero adjustement on request).
Movement: stainless steel.
Dial: aluminium, white with black markings.
Pointer: aluminium, micrometric adjustable.
Special version:
- **high overpressure :** 10 time the FSV but not over *30 psi* (2 bar) for pressure ranges *from 0...10 INWC to 0...6 psi* (25...400 mbar); 5 time the FSV but not over *600 psi* (40 bar), for pressure ranges *10...360 psi* (0,6...25 bar).

0...1 bar
0...1,6 bar
0...2,5 bar
0...4 bar
0...6 bar
0...10 bar
0...16 bar
0...25 bar
0...25 mbar
0...40 mbar
0...60 mbar
0...100 mbar
0...160 mbar
0...250 mbar
0...400 mbar
0...600 mbar

-0,6...1 bar
-1...0,6 bar
-1...1,5 bar
-1...3 bar
-1...5 bar
-1...9 bar
-1...15 bar
-1...24 bar
-10...15 mbar
-15...10 mbar
-15...25 mbar
-25...15 mbar
-20...40 mbar
-40...20 mbar
-40...60 mbar
-60...40 mbar
-60...100 mbar
-100...60 mbar
-100...150 mbar
-150...100 mbar
-150...250 mbar
-250...150 mbar
-200...400 mbar
-400...200 mbar
-400...600 mbar
-600...400 mbar

-25...0 mbar
-40...0 mbar
-60...0 mbar
-100...0 mbar
-160...0 mbar
-250...0 mbar
-400...0 mbar
-600...0 mbar
-1...0 bar

2.45.1 - MN12/18/T

Process connection: AISI 316L, PTFE coated.
Elastic element: AISI 316 Ti st.st. diaphragm, PTFE coated.
Other features as MN12/18.

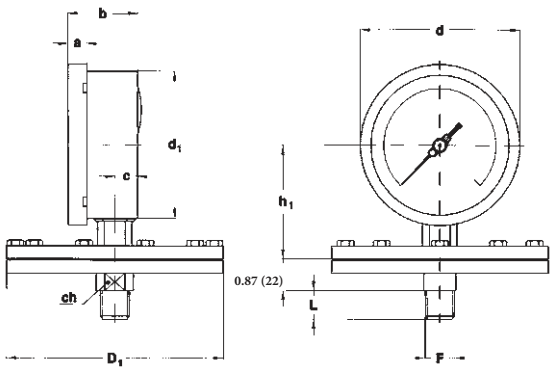

0...10 INWC to 0...6 psi

A - LOWER CONNECTION

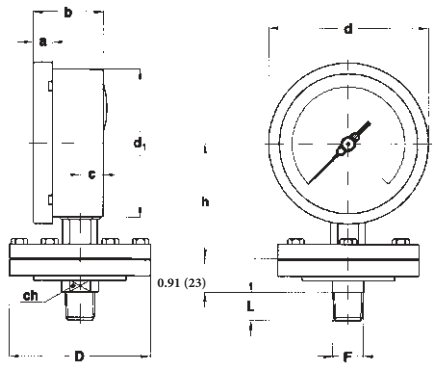

10...360 psi

Range	DS	F	a	b	c	d	d_1	h	h_1	D	D_1	ch	L	Weight
0...10 INWC to 0...6 psi (25...400 mbar)	E 4"(100mm)	41M G 1/2 B	0.51 (13)	1.90 (48,5)	0.63 (16,1)	4.35 (110,6)	3.97 (101)		3.09 (78,5)		5.90 (150)	0.86 (22)	0.78 (20)	5.73 lbs 2,6 kg
	G 6"(150mm)		0.59 (15)	1.98 (50,5)	0.64 (16,5)	6.33 (161)	5.88 (149,6)		4.36 (110,8)		5.90 (150)	0.86 (22)	0.78 (20)	6.50 lbs 2,95 kg
10...360 psi (0,6...25 bar)	E 4"(100mm)	43M 1/2-14 NPT	0.51 (13)	1.90 (48,5)	0.63 (16,1)	4.35 (110,6)	3.97 (101)	3.12 (79,5)		3.85 (98)		0.86 (22)	0.78 (20)	3.85 lbs 1,75 kg
	G 6"(150mm)		0.59 (15)	1.98 (50,5)	0.64 (16,5)	6.33 (161)	5.88 (149,6)	4.40 (111,8)		3.85 (98)		0.86 (22)	0.78 (20)	4.62 lbs 2,1 kg

dimensions : *inches* (mm)

OPTIONS

Model		MN12/18	MN12/18/T
Electric contacts for pressure ranges ≥ *25 INWC* (≥ 60 mbar)	(1)	◆	◆
C40 - Case and ring AISI316L st.st.		◆	◆
E65 - Protection degree IP 65 as per EN 60529/IEC 529	(4)	◆	◆
L22 - Maximum pointer Wiebrock	(4)	◆	◆
M23 - Monel 400 protection diaphragm		◆	◆
M22 - Hastelloy C protection diaphragm		◆	◆
M29 - Tantalium protection diaphragm		◆	◆
M26 - PTFE diaphragm protection		◆	
P02 - Degreasing for oxygen use		◆	◆
R10 - Glycerine filling *+32...+149°F* (0...+65 °C)	(2) (3) (4)	◆	◆
R11 - Silicon oil filling *-40...+149°F* (-40...+65 °C)	(2) (3) (4)	◆	◆
T01 - Tropicalization		◆	
T32 - Safety glass window	(4)	◆	◆

(1) Codes, description and wiring on data sheet MN14.
(2) For pressure ranges ≥ *10 psi* (600 mbar) only.
(3) Accuracy class 2,5 as per EN 837-3.
(4) Not available with electric contacts

"HOW TO ORDER" SEQUENCE

Section / Model /Case / Mounting / Diameter / Range / Process connection / Options

2	**42**	**1**	**A**	**E**	**41M**	**C40...T32**
	45			**G**	**43M**	

IN ORDER TO IMPROVE THEIR PRODUCTION, MESSRS. NUOVA FIMA RESERVE THE RIGHT TO THEMSELVES TO MAKE ALL THE MODIFICATIONS THAT THEY DEEM INDISPENSABLE AT ANY TIME. UPDATED DATA-SHEETS ARE AVAILABLE ON SITE: www.nuovafima.com

MN12/18

diaphragm pressure gauge
DS 4", 6" -150mm)
flanged connection

The sensing element is an elastic diaphragm, with concentric corrugations that drives the amplifying movement through a ball- joint.
They aare designed to measure pressure or vacuum of viscous, sedymentous, crystallisable or corrosive fluids. Compared to the bourdon tube system they are most robust and are better able to withstand overpressure or aggressive fluids.

2.42.1 - MN12/18

Designation: EN 837-3.
Ranges: *from 0...10 IN WC to 0...360 psi* (from 0...25 mbar to 0...25 bar), vacuum and combined vacuum/pressure (or equivalent units).
Accuracy class: 1,6 as per EN 837-3.
Ambient temperature: *-13...+149°F* (-25...+65 °C.)
Process fluid temperature: *+212°F* (max. +100 °C).
Working pressure: max 75% of FSV.
Overpressure limit: 25% of FSV.
Thermal drift: ± 0,6% every ± *50°F* (± 10° C) of ambient temperature
Protection degree: IP 55 as per EN 60529/IEC 529.
Socket material: AISI 316L st.st.
Elastic element: AISI 316 Ti st.st. diaphragm.
Gasket: PTFE.
Case: stainless steel.
Ring: stainless steel, bayonet lock.
Window: tempered glass.
Movement: stainless steel.
Dial: aluminium, white with black markings
Pointer: aluminium, micrometric adjustable.
Special version: -
high overpressure : 10 time the FSV but not over *30 psi* (2 bar) for pressure ranges *from 0...10 INWC to 0...6 psi* (25...400 mbar); 5 time the FSV but not over *600 psi* (40 bar), for pressure ranges *10...360 psi* (0,6...25 bar).

2.45.1 - MN12/18/T

Socket material: AISI 316L st.st., PTFE coated.
Elastic element: AISI 316 Ti st.st. diaphragm, PTFE coated.
Other features as model MN12/18/F.

OPTIONS

Model			MN12/18	MN12/18/T
	Electric contacts for pressure ranges ≥ *25 INWC* (60 mbar) (1)	(1)	◆	◆
C40 -	Case and ring AISI316L st.st.		◆	◆
E65 -	Protection degree IP 65 as per IEC 529	(4)	◆	◆
L22 -	Maximum pointer Wiebrock	(4)	◆	◆
M23 -	Monel 400 protection diaphragm		◆	◆
M22 -	Hastelloy C protection diaphragm		◆	◆
M29 -	Tantalium protection diaphragm		◆	◆
M26 -	PTFE diaphragm protection		◆	◆
P02 -	Degreasing for oxygen use		◆	◆
R10 -	Glycerine filling *+32...+149°F* (0...+65 °C)	(2) (3) (4)	◆	◆
R11 -	Silicon oil Silicon oil filling *-40...+149°F* (-40...+65 °C)	(2) (3) (4)	◆	◆
T01 -	Tropicalization		◆	◆
T32 -	Safety glass window	(4)	◆	◆

(1) Codes, description and wiring on data sheet MN14.
(2) For pressure ranges ≥ *10 psi* (600 mbar) only.
(3) Accuracy class 2,5 as per EN 837-3.
(4) Not available with electric contacts

ISO 9001 : 2008
Cert. nr. 0433/6

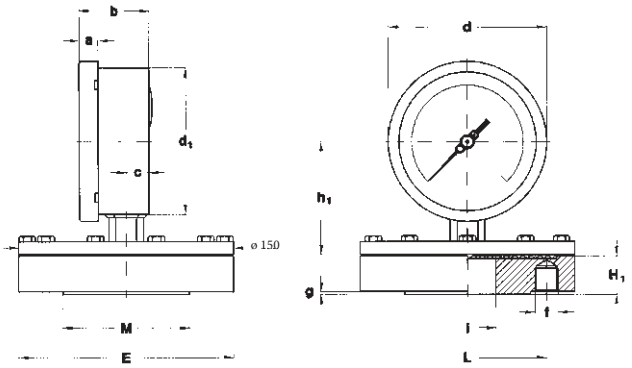

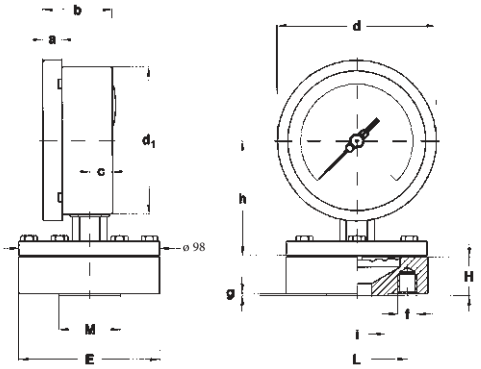

0...10 INWC to 0...6 psi **A - LOWER CONNECTION** 10...360 psi

UNI - DIN STANDARDS

dimensions : mm

DN (1)	PN	Code	H	H_1	E	M	I	g	L	f	N (2)
15	6	OO0	34	27	80	40	15	2	55	M10	4
15	10...16	OQ0	27	27	95	45	15	2	65	M12	4
15	25...40	OS0	27	27	95	45	15	2	65	M12	4
20	6	PO0	34	27	90	50	20	2	65	M10	4
20	10...16	PQ0	27	27	105	58	20	2	75	M12	4
20	25...40	PS0	27	27	105	58	20	2	75	M12	4
25	6	QO0	27	27	100	60	25	2	75	M10	4
25	10...16	QQ0	27	27	115	68	25	2	85	M12	4
25	25...40	QS0	27	27	115	68	25	2	85	M12	4

(1) DN 40, 50 also available (2) N° threaded holes.

ANSI STANDARDS

dimensions : *inches*

DN (1)	Classe	Code	H	H_1	E	M	I	g	L	f	N (2)
1/2"	150	4AA	1.33	1.06	3.54	1.37	0.59	0.08	2.37	1/2" 13UNC	4
1/2"	300	4BA	1.06	1.06	3.74	1.37	0.59	0.08	2.62	1/2" 13UNC	4
1/2"	600	4DA	1.90	1.06	3.74	1.37	0.59	0.27	2.62	1/2" 13UNC	4
3/4"	150	5AA	1.06	1.06	4.33	1.68	0.78	0.08	2.75	1/2" 13UNC	4
3/4"	300	5BA	1.49	1.06	4.53	1.68	0.78	0.08	3.25	5/8" 11UNC	4
3/4"	600	5DA	1.90	1.06	4.53	1.68	0.78	0.27	3.25	5/8" 11UNC	4
1"	150	6AA	1.06	1.06	4.33	2	0.98	0.08	3.12	1/2" 13UNC	4
1"	300	6BA	1.49	1.10	4.92	2	0.98	0.08	3.50	5/8" 11UNC	4
1"	600	6DA	1.90	1.10	4.92	2	0.98	0.27	3.50	5/8" 11UNC	4

(1) 1" 1/2, 2" also available (2) N° threaded holes.

"HOW TO ORDER" SEQUENCE

Section / Model /Case / Mounting / Diameter / Range / Process connection / Options

2	42	1	A	E	OO0...6DA	C40...T32
	45			G		

Copyright © Nuova Fima srl. All rights reserved. Any part of this publication should not be reproduced without a written Nuova Fima's srl approval

NUOVA FIMA USA Inc.
www.nuovafima.com - e-mail: infousa@nuovafima.com
4123 Hollister, Suite G - TX 77080 Houston
TEL. +1 713.690.9800 - FAX +1 713.690.9803

NUOVA FIMA srl
www.nuovafima.com - e-mail: info@nuovafima.com
P.O. BOX 58 - VIA C. BATTISTI 59 - 28045 INVORIO (NO) ITALY
TEL. +39 0322 253200 - FAX +39 0322 253232

IN ORDER TO IMPROVE THEIR PRODUCTION, MESSRS. NUOVA FIMA RESERVE THE RIGHT TO THEMSELVES TO MAKE ALL THE MODIFICATIONS THAT THEY DEEM INDISPENSABLE AT ANY TIME. UPDATED DATA-SHEETS ARE AVAILABLE ON SITE: www.nuovafima.com

MN12/18 ABS

diaphragm pressure gauge for absolute pressures DS 4", 6" (100-150mm)

The measurement element composed by a concentric waving diaphragm, separates an upper housing called "of reference" which is empty, from a lower housing where the fluid pressure gets in. The upper housing is isolated by a bellows from the atmospheric pressure and it allows to transmit the bending diaphragm movement, under the fluid pressure action, to the pointer through a joint and a linkage. In order to be a suitable support for the diaphragm and to ensure a high instrument resistance to overpressure, the upper part of the reference housing is as rippled as the diaphragm. The instrument case is exposed to the atmospheric pressure therefore it is possible to install optional accessories inside or outside it.

2.43.1 - Standard Model

Ranges: from 0...60 to 0...1600 mbar Abs, or equivalent units.
Accuracy : 1,6 as per EN 837-3, at *68 °F* (20°C) or a value of specify temperature in order.
Ambient temperature: *-13...+149 °F* (-25...+65 °C).
Process fluid temperature: *+212 °F* (+100 °C).
Working pressure: max 75% of the FSV.
Overpressure: max 3,5 bar abs for ranges ≤400 m bar abs; max 6 bar abs for ranges 0,6...1,6 bar abs.
Thermal drift: ± 0,6% every ± *50°F* (± 10° C) of ambient temperature
Protection: IP 55 as per IEC 529.
Process connection: AISI 316L st.st.
Elastic element: AISI 316L st.st. diaphragm.
Seal bellows: AISI 321 st.st.
Case: AISI 304 st.st.
Ring: AISI 304 st.st. bayonet lock.
Window: glass, 4 mm thick.
Movement: stainless steel with sector stiffened.
Dial: aluminium, white with black markings.
Pointer: adjustable, aluminium, black.

RANGE
mbar abs
0...60
0...100
0...160
0...250
0...400
0...600
0...1000
0...1600

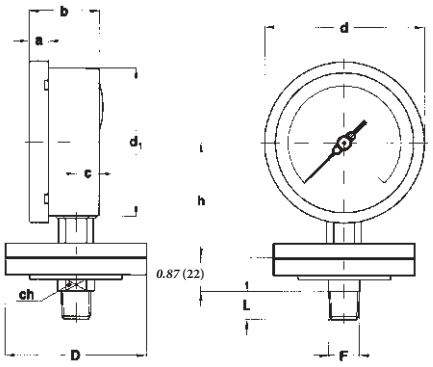

0,25..1,6 bar Abs

A - LOWER CONNECTION

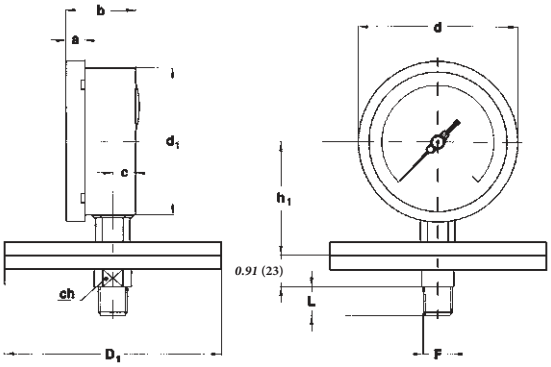

60...160 mbar Abs

RANGE	DS	F	a	b	c	d	d_1	h	h_1	D	D_1	ch	L	Weight
60...400 mbar Abs	**E** 4" (100mm)	**41M** G 1/2 B	*0.51* (13)	*1.91* (48,5)	*0.63* (16,1)	*4.35* (110,6)	*3.98* (101)	- -	*3.09* (78,5)	- -	*5.91* (150)	*0.87* (22)	*0.79* (20)	*5.73 lbs* 2,6 kg
	G 6" (150mm)		*0.59* (15)	*1.99* (50,5)	*0.65* (16,5)	*6.34* (161)	*5.89* (149,6)	- -	*4.36* (110,8)	- -	*5.91* (150)	*0.87* (22)	*0.79* (20)	*6.50 lbs* 2,95 kg
0,6 ...1,6 bar Abs	**E** 4" (100mm)	**43M** 1/2-14 NPT	*0.51* (13)	*1.91* (48,5)	*0.63* (16,1)	*4.35* (110,6)	*3.98* (101)	*3.13* (79,5)	- -	*3.86* (98)	- -	*0.87* (22)	*0.79* (20)	*3.85 lbs* 1,75 kg
	G 6" (150mm)		*0.59* (15)	*1.99* (50,5)	*0.65* (16,5)	*6.34* (161)	*5.89* (149,6)	*4.40* (111,8)	- -	*3.86* (98)	- -	*0.87* (22)	*0.79* (20)	*4.62 lbs* 2,1 kg

dimensions : *inches* (mm)

OPTIONS

	Electric contacts (1)
E65 -	Protection IP 65
T01 -	Tropicalization
T32 -	Safety glass

(1) Code and description see data sheet MN14/M

"HOW TO ORDER" SEQUENCE

Section / Model /Case / Mounting / Diameter / Range / Process connection / Options

2	43	1	A	E	41M	E65...T32
				G	43M	

IN ORDER TO IMPROVE THEIR PRODUCTION, MESSRS. NUOVA FIMA RESERVE THE RIGHT TO THEMSELVES TO MAKE ALL THE MODIFICATIONS THAT THEY DEEM INDISPENSABLE AT ANY TIME. UPDATED DATA-SHEETS ARE AVAILABLE ON SITE: www.nuovafima.com

Copyright © Nuova Fima srl. All rights reserved. Any part of this publication should not be reproduced without a written Nuova Fima's srl approval

NUOVA FIMA USA Inc.
www.nuovafima.com - e-mail: infousa@nuovafima.com
4123 Hollister, Suite G - TX 77080 Houston
TEL. +1 713.690.9800 - FAX +1 713.690.9803

NUOVA FIMA srl
www.nuovafima.com - e-mail: info@nuovafima.com
P.O. BOX 58 - VIA C. BATTISTI 59 - 28045 INVORIO (NO) ITALY
TEL. +39 0322 253200 - FAX +39 0322 253232

MD13

differential pressure gauges PN 100 with single diaphragm DS 6" (150mm)

PED 2014/68/UE ATEX 2014/34/UE

These instruments are used to check differential pressures of liquids wich do not have high viscosity and do not crystalizee.

2.13.1 - Standard Model

Accuracy class: 2,5 as per EN 837.
Scale amplitude: 180°.
Statica Pressure: *max 1500 psi* (100 bar).
Ambient temperature: *-13...+149°F* (-25...+65 °C.)
Process fluid temperature: *+302°F* (+150 °C).
Thermal drift: ± 0,8 % every ±*50°F* (± 10° C) of ambient temperature
Protection degree: IP 55 as per EN 60529/IEC 529.
Socket material: AISI 316L st.st.
Elastic element: Duratherm diaphragm.
Gasket: VITON and PTFE.
Case: AISI 304 st.st.
Ring: AISI 304 st.st., bayonet lock
Window: tempered glass.
Movement: stainless steel.
Dial: aluminium, white with black markings
Pointer: adjustable, aluminium, black.
Weight: *12.12 lbs* (5,5 kg).

RANGE	mbar	mmH2O	bar	kPa
0...0,6			◆	
0... 1			◆	
0...1,6			◆	
0...2,5			◆	
0...4			◆	
0...6			◆	
0...10			◆	
0...16			◆	
0...25			◆	
0...40				◆
0...60				◆
0...100				◆
0...160				◆
0...250				◆
0...400	◆			◆
0...600	◆			◆
0...1000	◆			◆
0...1600	◆			
0...2500	◆			
0...4000		◆		
0...6000		◆		
0...10000		◆		

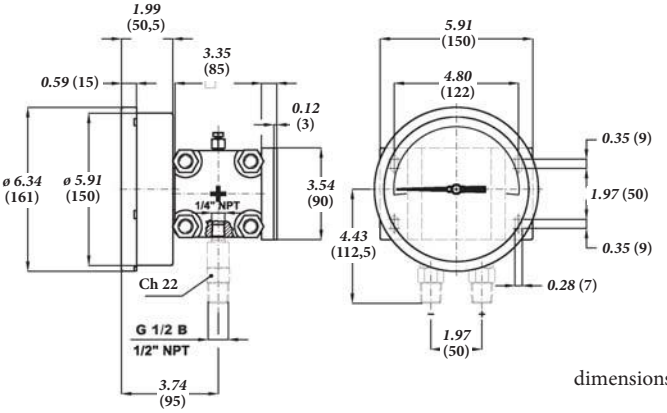

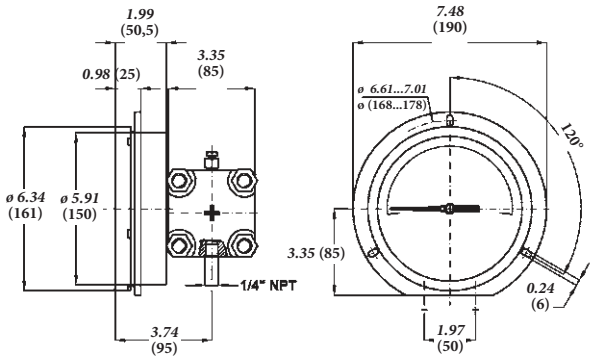

dimensions : *inches* (mm)

Lower (Mounting code A) , with back flange (Option code C)

Lower (Mounting code A) , with front flange (Option code E)

OPTIONS

C -	Back flange		**R10** -	Glycerine filled case. Ambient temp. *+32...+149 °F* (0...+65 °C).	(2)
E -	Front flange	(1) (2)	**R11** -	Silicon oil filled case. Ambient temp. *-40...+149°F* (-40...+65 °C).	
C40 -	Case and ring AISI 316L st.st.		**S31** -	2" pipe mounting bracket	
E65 -	Protection degree IP65	(2)	**T01** -	Tropicalization	(2)
L22 -	Maximum pointer IP65 on Plexiglas window	(2)	**T32** -	Safety glass window	(3)
2G9 -	Execution: ATEX : II 2G c	(2)			
2D9 -	Execution: ATEX : II 2GD c				

(1) For constructive details see Atex execution catalogue sheet
(3) Codes, description and wiring on data-sheet MN14
(3) Not available with eletric contacts

"HOW TO ORDER" SEQUENCE

Section	Model	Case	Mounting	Diameter	Special version	Range	Process connection	Options
2	13	1	A	G	---		41M - G 1/2 A M	C, E
							43M - 1/2" NPT M	E65...T32
							23F - 1/4" NPT F	

Copyright © Nuova Fima srl. All rights reserved. Any part of this publication should not be reproduced without a written Nuova Fima's srl approval

IN ORDER TO IMPROVE THEIR PRODUCTION, MESSRS. NUOVA FIMA RESERVE THE RIGHT TO THEMSELVES TO MAKE ALL THE MODIFICATIONS THAT THEY DEEM INDISPENSABLE AT ANY TIME. UPDATED DATA-SHEETS ARE AVAILABLE ON SITE: www.nuovafima.com

NUOVA FIMA USA Inc.
www.nuovafima.com - e-mail: infousa@nuovafima.com
4123 Hollister, Suite G - TX 77080 Houston
TEL. +1 713.690.9800 - FAX +1 713.690.9803

NUOVA FIMA srl
www.nuovafima.com - e-mail: info@nuovafima.com
P.O. BOX 58 - VIA C. BATTISTI 59 - 28045 INVORIO (NO) ITALY
TEL. +39 0322 253200 - FAX +39 0322 253232

MD14

bourdon tube pressure gauges
anti-vibration heavy duty version
DS 4" (100mm)

PED 2014/68/EU

Designed to indicate differential pressure of gas or not cristalising fluid within the range 0...10 mbar to 0...160 mbar.

2.14.1 - Standard Model

Accuracy class: ± 1,6% of the full scale value.
Scale amplitude: 180°.
Ambient temperature: *-22...+149 °F* (-40...+65 °C).
Process fluid temperature: *-13...+149 °F* (-25...+65 °C).
Protection: IP 55 as per EN 60529/IEC 529.
Process connection: AISI 316L st.st.
Elastic element: AISI 316L st.st. bellows.
Gasket: PTFE.
Case: stainless steel.
Ring: stainless steel polished, bayonet lock.
Window: glass.
Movement: stainless steel.
Dial: aluminium, white with black markings.
Pointer: aluminium, micrometric adjustable.

RANGES (1)	Static pressure one side	Static pressure both side
0...10 mbar	100 mbar	10 bar
0...16 mbar	160 mbar	10 bar
0...25 mbar	250 mbar	10 bar
0...40 mbar	400 mbar	10 bar
0...60 mbar	600 mbar	25 bar
0...100 mbar	1 bar	25 bar
0...160 mbar	1,6 bar	25 bar

(1) Other unit of measurement upon request.

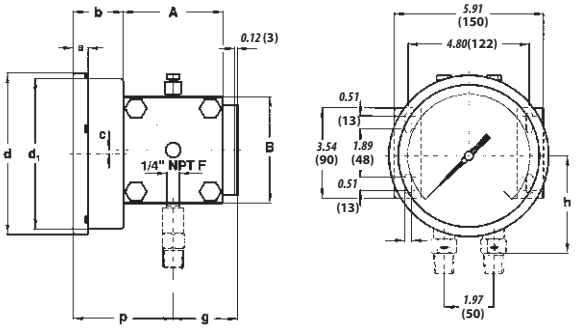

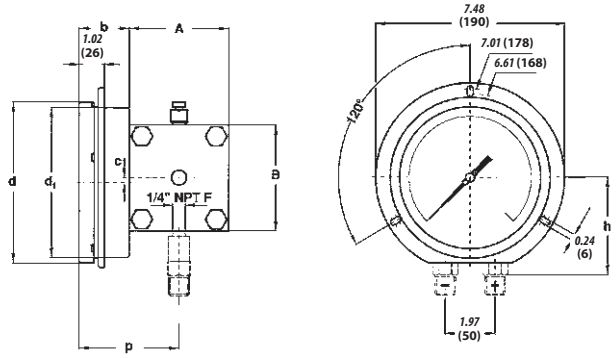

dimensions : *inches* (mm)

Lower (Mounting code A) , with back flange (Option code C): DS *4", 6"* (100-150mm)

Lower (Mounting code A) , with front flange (Option code F): DS *4"* (100mm)

DS	Ranges	F	a	b	c	d	d_1	h	p	g	A	B	Weight *lbs* (kg)
E	≤ 40 mbar	41M G 1/2 A	*0.51* (13)	*1.91* (48,5)	*0.16* (4)	*4.35* (110,5)	*3.98* (101)	*3.94* (100)	*3.96* (100,5)	*2.56* (65)	*3.94* (100)	*4.33* (110)	*4,79 kg* (4,79)
4" (100mm)	≥ 60 mbar							*3.35* (85)	*3.46* (88)	*2.20* (56)	*3.11* (79)	*3.15* (80)	*3,33 kg* (3,33)
G	≤ 40 mbar	43M 1/2-14 NPT	*0.59* (15)	*1.99* (50,5)	*0.10* (2,5)	*6.34* (161)	*5.91* (150)	*3.94* (100)	*3.96* (100,5)	*2.56* (65)	*3.94* (100)	*4.33* (110)	*5,29 kg* (5,29)
6" (150mm)	≥ 60 mbar							*3.35* (85)	*3.46* (88)	*2.20* (56)	*3.11* (79)	*3.15* (80)	*3,83 kg* (3,83)

dimensions : *inches* (mm)

OPTIONS

C - Back flange	Electric contacts (1)
E - Front flange	**R11** - Silicon oil filled case. Ambient temp. *-40...+149°F* (-40...+65 °C). (1) (3) (4)
C40 - AISI 316L st.st. case and ring	**S31** - 2" pipe mounting bracket
L22 - Maximum pointer IP65 (2) (4)	**T01** - Tropicalization
Q01 - Special dial	**T32** - Safety glass window (4)
R10 - Case glycerine filling. Ambient temp. *+32...+149°F* (0...+65 °C). (4)	

(1) Codes, descriptions and wiring on data-sheet MN14: for pressure ranges ≥ 20 mbar
(2) To be ordered with Plexiglas window
(3) Window gasket and blow out vent: VITON
(4) Not available with electric contacts

"HOW TO ORDER" SEQUENCE

Section	Model	Case	Mounting	Diameter	Special version	Range	Process connection	Options
2	14	1	A	E	---		41M - G 1/2 A M	C, E
			G				43M - 1/2" NPT M	C40...T32
							23F - 1/4" NPT F	

Copyright © Nuova Fima srl. All rights reserved. Any part of this publication should not be reproduced without a written Nuova Fima's srl approval

NUOVA FIMA USA Inc.
www.nuovafima.com - e-mail: infousa@nuovafima.com
4123 Hollister, Suite G - TX 77080 Houston
TEL. +1 713.690.9800 - FAX +1 713.690.9803

NUOVA FIMA srl
www.nuovafima.com - e-mail: info@nuovafima.com
P.O. BOX 58 - VIA C. BATTISTI 59 - 28045 INVORIO (NO) ITALY
TEL. +39 0322 253200 - FAX +39 0322 253232

IN ORDER TO IMPROVE THEIR PRODUCTION, MESSRS. NUOVA FIMA RESERVE THE RIGHT TO THEMSELVES TO MAKE ALL THE MODIFICATIONS THAT THEY DEEM INDISPENSABLE AT ANY TIME. UPDATED DATA-SHEETS ARE AVAILABLE ON SITE: www.nuovafima.com

MD15

differential pressure gauges PN 200 with double diaphragm DS 4", 6" (100-150mm)

PED 2014/68/UE ATEX 2014/34/UE

These instruments are used to check differential pressures of gaseous liquids wich do not have high viscosity and do not crystalizee. In presence of high temperature, high viscosity and corrosive process fluid or which can crystalize these instruments can be fitted with remote mounting diaphragm seals.

2.15.1 - Standard Model

Ranges: *from 0...40 IN H2O to 0...300 psi* (from 0...0,1 bar to 0...25 bar, or other equivalent unit).
Accuracy class: 1,6 as per EN 837.
Scale amplitude: 180°...270°C depending on the scale range .
Static pressure: *300...3000 psi* (25...200 bar), depending on the scale range.
Ambient temperature: *-40...+149°F* (-40...+65 °C).
Process fluid temperature: *+302°F* (+150 °C).
Thermal drift: ±0,8% every *±50°F* (±10 °C) of ambient temperature
Protection degree: IP 55 as per EN 60529/IEC 529.
Socket material: AISI 316L st.st.

Elastic element: AISI 316L st.st. double diaphragm for pressure ranges < 250 mbar; AISI 316L st.st./Duratherm double diaphragm for pressure ranges ≥ 250 mbar
Gasket: VITON and PTFE.
Case: stainless steel.
Ring: stainless steel, polished, bayonet lock.
Window: tempered glass (with external zero adjustement on request).
Movement: stainless steel.
Dial: aluminium, white with black markings
Pointer: adjustable, aluminium, black

RANGE	Static pressure, one side : *psi* (bar)	Static pressure, both side : *psi* (bar)	Scale amplitude DS *4"* (100mm)	Scale amplitude DS *6"* (150mm)
(0...0,1 bar)	*360* (25)	*1500* (100)	180°	180°
(0...0,16 bar)	*360* (25)	*1500* (100)	180°	180°
0...4 psi (0...0,25 bar)	*1500* (100)	*3000* (200)	270°	180°
0...6 psi (0...0,4 bar)	*1500* (100)	*3000* (200)	270°	180°
0...10 psi (0...0,6 bar)	*1500* (100)	*3000* (200)	270°	270°
0...15 psi (0...1 bar)	*1500* (100)	*3000* (200)	270°	270°
(0...1,6 bar)	*1500* (100)	*3000* (200)	270°	270°
0...30 psi (0...2,5 bar)	*1500* (100)	*3000* (200)	270°	270°
0...60 psi (0...4 bar)	*1500* (100)	*3000* (200)	270°	270°
0...100 psi (0...6 bar)	*1500* (100)	*3000* (200)	270°	270°
0...160 psi (0...10 bar)	*1500* (100)	*3000* (200)	270°	270°
0...250 psi (0...16 bar)	*1500* (100)	*3000* (200)	270°	270°
0...300 psi (0...25 bar)	*1500* (100)	*3000* (200)	270°	270°

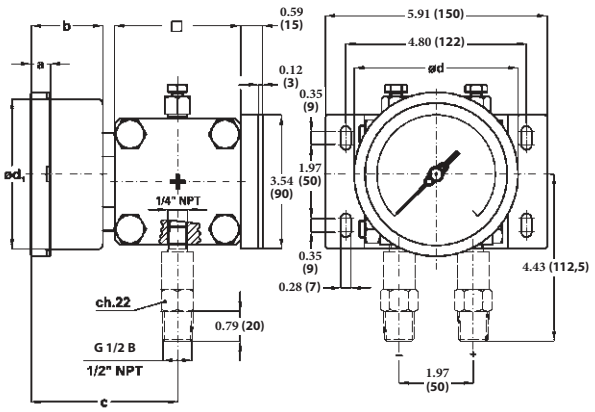

Lower (Mounting code A) , with back flange (Option code C): DS *4", 6"* (100-150mm)

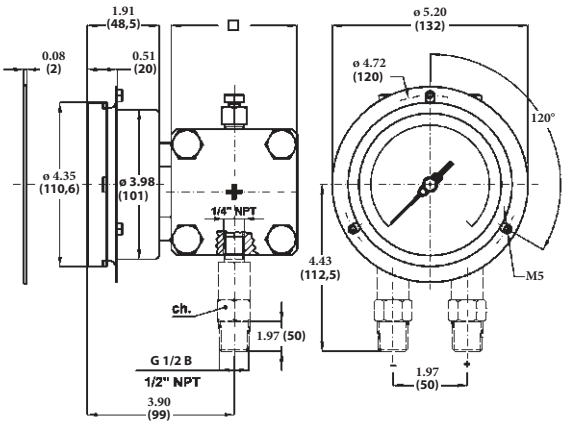

Lower (Mounting code A) , with front flange (Option code F): DS *4"* (100mm)

DS	a	b	d	d_1	□ ≤ 0,16 bar	□ > 0,16 bar	Weight : lbs (kg)
E	*0.51"*	*1.90"*	*4.35"*	*3.97"*	*3.93"*	*3.34"*	*10.36"*
4" (100)	(13)	(48,5)	(110,6)	(101)	(100)	(85)	(4,7)
G	*0.59"*	*1.96"*	*6.33"*	*5.88"*	*3.93"*	*3.34"*	*11.24"*
6" (150)	(15)	(50,5)	(161)	(149,6)	(100)	(85)	(5,1)

dimensions : *inches* (mm)

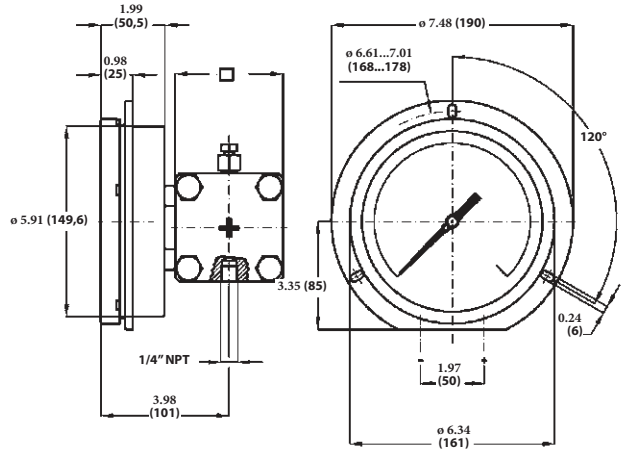

Lower (Mounting code A) , with front flange (Option code E): DS *6"* (150mm)

OPTIONS

C -	Back flange for DN100-150 instruments		D10 -	Elastic element and connection MONEL 400	(2)
F -	Front flange for DN100 instruments		E65 -	Protection degree IP65	(8)
E -	Front flange for DN150 instruments		M23 -	Protection diaphragm Monel 400	(2)
	Sliding contacts for DN 150 (amplitude180°)	(1)	R11 -	Case filling with silicon oil. Ambient temp. *-40...+149°F* (-40...+65 °C)	(5) (8)
E30 -	NACE version MR0103/MR0175 (ISO15156)	(3)	T01 -	Tropicalization	
L22 -	Maximum pointer IP 65 on plexiglas window	(8)	T32 -	Safety glass window	(8)
R10 -	Case glycerine filling. Ambient temp. *+32...+149°F* (0...+65 °C)	(8)	C40 -	Case and ring AISI 316L st.st.	
S31 -	2"pipe mounting bracket		2G9 -	ATEX versions : II 2G c	(7) (8)
	NR. 2 diaphragm seals mounting	(6)	2D9 -	ATEX versions : II 2GD c	(7) (8)

(1) Code and description see data sheet MN14
(2) Accuracy 2,5 as per EN837,for ranges < *160 IN H_2O* (400 mbar)
(3) To be ordered with Monel 400 or Hastelloy C diaphragms
(5) Window gasket and blow out vent Viton
(6) Contact technical department
(7) For constructive details see Atex execution data-sheet
(8) Not available with electric contacts

"HOW TO ORDER" SEQUENCE

Section	Model	Case	Mounting	Diameter	Special version	Range	Process connection	Options
2	15	1	A	E	---		41M - G 1/2 A M	C...E
				G	D10		43M - 1/2" NPT M	E30...2D9
							43F - G 1/2 F	

RG6 - 06/14
IN ORDER TO IMPROVE THEIR PRODUCTION, MESSRS. NUOVA FIMA RESERVE THE RIGHT TO THEMSELVES TO MAKE ALL THE MODIFICATIONS THAT THEY DEEM INDISPENSABLE AT ANY TIME. UPDATED DATA-SHEETS ARE AVAILABLE ON SITE: www.nuovafima.com

NUOVA FIMA USA Inc.
www.nuovafima.com - e-mail: infousa@nuovafima.com
4123 Hollister, Suite G - TX 77080 Houston
TEL. +1 713.690.9800 - FAX +1 713.690.9803

NUOVA FIMA srl
www.nuovafima.com - e-mail: info@nuovafima.com
P.O. BOX 58 - VIA C. BATTISTI 59 - 28045 INVORIO (NO) ITALY
TEL. +39 0322 253200 - FAX +39 0322 253232

MD16

differential pressure gauges PN 100 with double diaphragm DS 4", 6" (100-150mm)

PED 2014/68/UE ATEX 2014/34/UE

These instruments are used to check filter obstructions, pressure drops, flow rate differences, level, measurements and generally the difference between two pressures of equal or different circuits. The measuring element is formed by two diaphragms, acting on the same movement. In this way the pointer senses only the difference between the two pressures corresponding respectively to upstream and downstream circuit pressure.

2.16.1 - Standard Model

Accuracy class: 2,5 as per EN 837.
Scale amplitude: 180°.
Static pressure: *1500 psi max* (100 bar).
Ambient temperature: *-40...+149°F* (-40...+65 °C).
Process fluid temperature: *+302°F* (+150 °C).
Protection: IP 55 as per EN 60529/IEC 529.
Process connection: AISI 316L st.st.
Elastic element: AISI 316L/Duratherm st.st. double diaphragm.
Gasket: VITON and PTFE.
Case: stainless steel.
Ring: stainless steel polished, bayonet lock.
Window: glass.
Movement: stainless steel.
Dial: aluminium, white with black markings.
Pointer: aluminium, micrometric adjustable.

RANGES	mbar	mmH2O	bar	kPa	psi
0...0,4			◆		
0...0,6			◆		
0...1			◆		
0...1,6			◆		
0...2,5			◆		
0...4			◆		◆
0...6			◆		◆
0...10			◆		◆
0...15					◆
0...30					◆
0...40				◆	◆
0...60				◆	◆
0...100				◆	◆
0...160				◆	◆
0...200					◆
0...250				◆	◆
0...300					◆
0...400	◆			◆	
0...600	◆			◆	
0...1000	◆			◆	
0...1600	◆				
0...4000		◆			
0...6000		◆			
0...10000		◆			

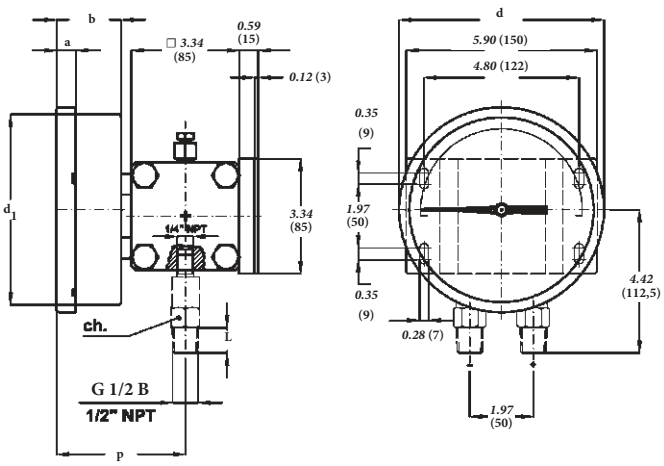

Lower (Mounting code A) , with back flange (Option code C): DS 4", 6" (100-150mm)

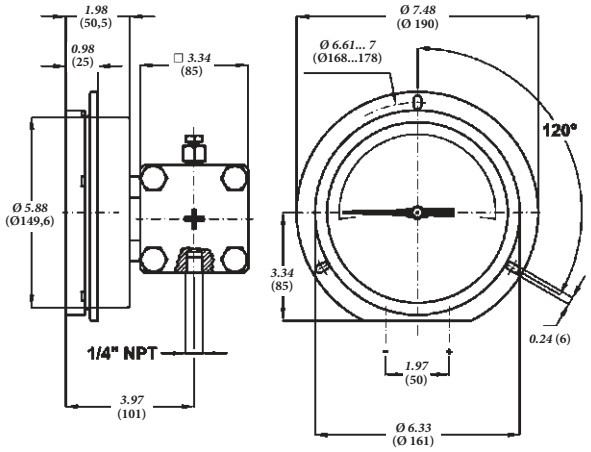

Lower (Mounting code A) , with front flange (Option code F : DS 4" - 100mm; Option code E : DS 6" - 150mm)

dimensions : *inches* (mm)

Mounting	DS	F	a	b	d	d_1	p	L	ch	Weight *lbs* (kg)
Wall	E 4" (100mm)	41M G 1/2 A 43M 1/2-14 NPT	0.51 (13)	1.91 (48,5)	4.35 (110,5)	3.98 (101)	3.88 (98,5)	0.79 (20)	0.87 (22)	10.71 (4,86)
Wall	G 6" (150mm)		0.59 (15)	1.99 (50,5)	6.34 (161)	5.89 (149,5)	3.97 (101)	0.79 (20)	0.87 (22)	11.79 (5,35)
Panel	G 6" (150mm)		1 (25,5)	1.99 (50,5)	6.34 (161)	5.89 (149,5)	3.97 (101)	0.79 (20)	0.87 (22)	11.35 (5,15)

OPTIONS

C -	Back flange		P02 -	Oxygen service	(5)
F -	Front flange for DN100 instruments		R10 -	Glycerine filled case. Ambient temp. *+32...+149°F* (0...+65 °C).	(8)
E -	Front flange for DN150 instruments		R11 -	Silicon oil filled case. Ambient temp. *-40...+149°F* (-40...+65 °C).	(6) (8)
C40 -	AISI 316L st.st. case and ring		S31 -	2" pipe mounting bracket	
E30 -	NACE MR0175 version (ISO 15156)	(2)	T01 -	Tropicalization	
E65 -	Protection IP65	(3) (8)	T32 -	Safety glass window	(8)
L22 -	Maximum pointer IP65	(4)	2G9 -	ATEX versions : II 2G c	(8) (9)
M23 -	MONEL 400 diaphragms		2D9 -	ATEX versions : II 2GD c	(8) (9)
	Mechanical electric contacts	(1)			

(1) Codes, descriptions and wiring on data-sheet MN14
(2) Available for ranges ≥ 1 bar. To be ordered with Monel 400 diaphragm.
(3) To be ordered with Plexiglas window
(4) Available only for ranges ≥ 1 bar
(5) Filling of internal chamber with Fluorolube
(6) Window gasket and blow out vent: VITON
(8) Not available with electric contacts
(9) For constructive details see Atex execution data-sheet

"HOW TO ORDER" SEQUENCE

Section	Model	Case	Mounting	Diameter	Special version	Range	Process connection	Options
2	16	1	A	E G	---		41M - G 1/2 A M 43M - 1/2" NPT M 23F - 1/4" NPT F	C, E C40...2D9

Copyright © Nuova Fima srl. All rights reserved. Any part of this publication should not be reproduced without a written Nuova Fima's srl approval

NUOVA FIMA USA Inc.
www.nuovafima.com - e-mail: infousa@nuovafima.com
4123 Hollister, Suite G - TX 77080 Houston
TEL. +1 713.690.9800 - FAX +1 713.690.9803

NUOVA FIMA srl
www.nuovafima.com - e-mail: info@nuovafima.com
P.O. BOX 58 - VIA C. BATTISTI 59 - 28045 INVORIO (NO) ITALY
TEL. +39 0322 253200 - FAX +39 0322 253232

RG6 - 06/14
IN ORDER TO IMPROVE THEIR PRODUCTION, MESSRS. NUOVA FIMA RESERVE THE RIGHT TO THEMSELVES TO MAKE ALL THE MODIFICATIONS THAT THEY DEEM INDISPENSABLE AT ANY TIME. UPDATED DATA-SHEETS ARE AVAILABLE ON SITE: www.nuovafima.com

MD17

differential pressure gauges PN 400 with double diaphragm DS 4", 6" (100-150mm)

PED 2014/68/UE ATEX 2014/34/UE

These instruments are used to check filter obstructions, pressure drops, flow rate differences, level, measurements and generallythe difference between two pressures of equal of different circuits. The measuring element is formed by two diaphragms, acting on the same movement. In theis way the pointer senses only the difference between the two pressures corresponding respectively to upstream and downstream circuit pressure.

2.17.1 - Standard Model

Accuracy class: 1,6 as per EN 837.
Scale amplitude: 270°.
Static Pressure: *6000 psi max* (400 bar).
Ambient temperature: *-40...+149°F* (-40...+65 °C).
Process fluid temperature: *+302°F* (+150 °C).
Thermal drift: ± 0,8 % every *±50°F* (± 10° C) of ambient temperature
Protection degree: IP 55 as per EN 60529/IEC 529.
Socket material: AISI 316L st.st.
Elastic element: double diaphragm AISI 316L st.st/Duratherm.
Gasket: VITON and PTFE.

Case: stainless steel.
Ring: stainless steel, bayonet lock.
Window: tempered glass.
Movement: stainles steel.
Dial: aluminium, white with black markings

RANGE	Static pressure, one side : *psi* (bar)	Static pressure, both side : *psi* (bar)
(0...0,4 bar)	*3500* (250)	*6000* (400)
0...10 psi (0...0,6 bar)	*3500* (250)	*6000* (400)
0...15 psi (0...1 bar)	*3500* (250)	*6000* (400)
(0...1,6 bar)	*3500* (250)	*6000* (400)
0...30 psi (0...2,5 bar)	*3500* (250)	*6000* (400)
0...60 psi (0...4 bar)	*3500* (250)	*6000* (400)
0...100 psi (0...6 bar)	*3500* (250)	*6000* (400)
0...160 psi (0...10 bar)	*3500* (250)	*6000* (400)

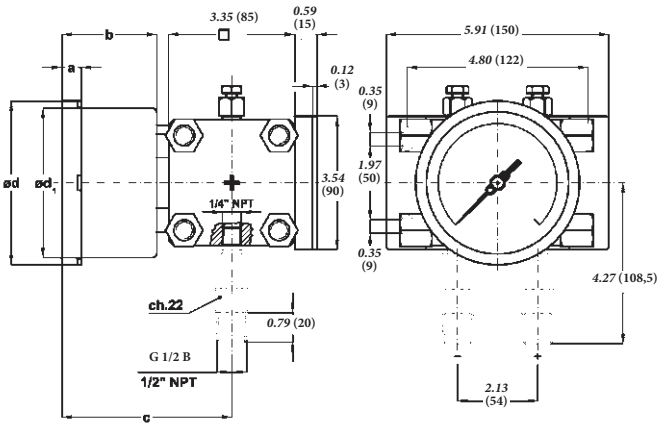

Lower (Mounting code A) , with back flange (Option code C): DS *4", 6"* (100-150mm)

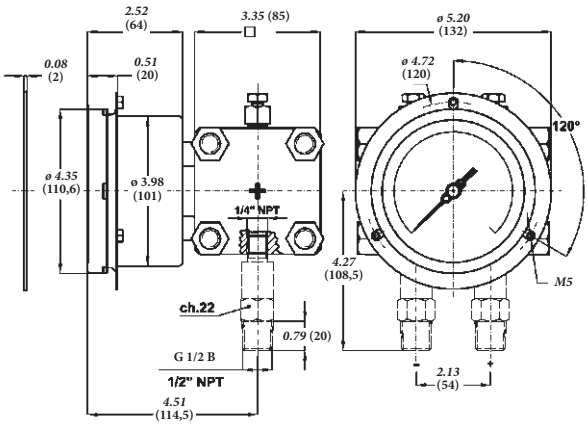

Lower (Mounting code A) , with front flange (Option code F): DS *4"* (100mm)

DS	a	b	c	d	d_1	Weight : lbs (kg)
E *4"* (100)	*0.51"* (13)	*2.52"* (64)	*4.51"* (114,5)	*4.35"* (110,6)	*3.97"* (101)	*11.9"* (5,4)
G *6"* (150)	*0.59"* (15)	*2.68"* (68)	*4.67"* (118,5)	*6.33"* (161)	*5.88"* (149,6)	*12.78"* (5,8)

dimensions : *inches* (mm)

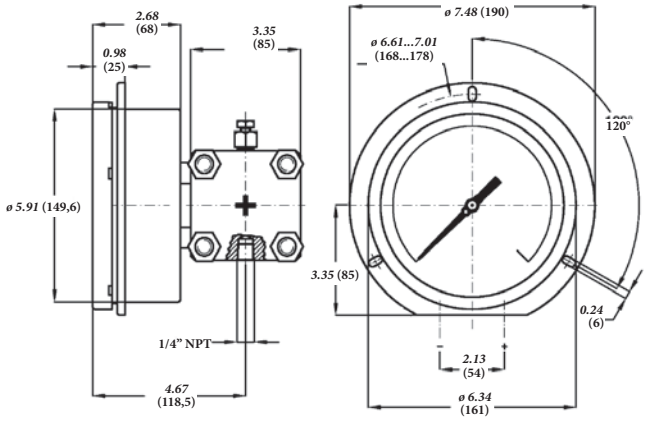

Lower (Mounting code A) , with front flange (Option code E): DS *6"* (150mm)

OPTIONS

C -	Back flange for DN100-150 instruments	**L22** -	Maximum pointer IP 65 on plexiglas window (3) (6)
F -	Front flange for DN100 instruments	**M23** -	Protection diaphragm MONEL 400 (4)
E -	Front flange for DN150 instruments	**R10** -	Case glycerine filling. Ambient temp. *+32...+149°F* (0...+65 °C). (6)
	Electric contacts (amplitude 180°) (1)	**R11** -	Case filling with silicon oil. Ambient temp. *-40...+149°F* (-40...+65 °C). (6)
C40 -	Case and ring AISI 316L st.st.	**S31** -	2"pipe mounting bracket
E30 -	NACE version MR0103/MR0175 (ISO 15156) (2)	**T32** -	Safety glass window (6)
E65 -	Protection degree IP 65 (6)	**2D9** -	Execution: ATEX : II 2GD c
2G9 -	Execution: ATEX : II 2G c (5) (6)		

(1) Codes, descriptions and wiring on data-sheet MN14
(2) To be ordered with Monel 400 or Hastelloy C diaphragms
(3) To be ordered with plexiglas window
(4) Ac curacy 2,5 secondo EN 837
(5) For constructive details see ATEX execution data-sheet
(6) Not available with electric contacts

"HOW TO ORDER" SEQUENCE

Section	Model	Case	Mounting	Diameter	Special version	Range	Process connection	Options
2	17	1	A	E	---		41M - G 1/2 A M	C...E
				G			43M - 1/2" NPT M	C40...2D9
							43F - 1/2" NPT F	

RBS-06/14

IN ORDER TO IMPROVE THEIR PRODUCTION, MESSRS. NUOVA FIMA RESERVE THE RIGHT TO THEMSELVES TO MAKE ALL THE MODIFICATIONS THAT THEY DEEM INDISPENSABLE AT ANY TIME. UPDATED DATA-SHEETS ARE AVAILABLE ON SITE: www.nuovafima.com

NUOVA FIMA USA Inc.
www.nuovafima.com - e-mail: infousa@nuovafima.com
4123 Hollister, Suite G - TX 77080 Houston
TEL. +1 713.690.9800 - FAX +1 713.690.9803

NUOVA FIMA srl
www.nuovafima.com - e-mail: info@nuovafima.com
P.O. BOX 58 - VIA C. BATTISTI 59 - 28045 INVORIO (NO) ITALY
TEL. +39 0322 253200 - FAX +39 0322 253232

MD18

differential pressure gauges with double Bourdon tube, DS 4" (100mm)

PED 2014/68/UE

These instruments are used to check filter obstructions, pressure drops, flow rate differences, level, measurements and generally a difference between two pressures of onel or different circuits. The measuring element is formed by two bourdon tubes, acting on the same movement. In this way the pointer shows only the difference between the two pressures corresponding respectively to upstream and downstream pressure of the circuit.

2.18.1 - Standard Model

Accuracy class: 1,6 as per EN 837. (2,5 for range 0...0,4 bar)
Ambient temperature: *-13...+149°F* (-25...+65 °C.)
Process fluid temperature: max. *+212°F* (+100 °C); max *+149°F* (+65 °C) when filled.
Protection: IP 55 as per EN 60529/IEC 529 (IP 65 when filled).
Thermal drift: ± 0,8% every ± *50°F* (10 °C) of ambient temperature.
Process connection: AISI 316 st.st.
Elastic element: AISI 316 L. st.st. Bourdon tube, seamless.

Case: st.st.
Ring: st.st. polished, bayonet lock.
Window: tempered glass.
Movement: stainless steel.
Dial: aluminium, white with black markings.
Special dial: ranges different from standard, custom artworks available on request.
Pointer: adjustable, aluminium, black.

Differential Δp (1) : *psi* (bar)	Static pressure, both sides or side "+" : *psi* (bar)	Static pressure, side "-" : *psi* (bar)
0...6 (0...0,4)	*10.44* (0,72)	*8.70* (0,6)
0...10 (0...0,6)	*23.21* (1,6)	*14.50* (1)
0...16 (0...1)	*58* (4)	*23.21* (1,6)
0...25 (0...1,6)	*116* (8)	*29* (2)
0...40 (0...2,5)	*181.30* (12,5)	*43.51* (3)
0...60 (0...4)	*232* (16)	*72.52* (5)
0...100 (0...6)	*348* (24)	*145* (10)
0...160 (0...10)	*580.15* (40)	*232* (16)

(1) Other units of measurement upon request.

Damping liquids	Ambient temperature
Glycerine 98%	*+60…+150 °F* (+15…+65 °C)
Silicone oil	*-50…+150 °F* (-45…+65 °C)

ISO 9001 : 2008
Cert. nr. 0433/6

IK4-06/14

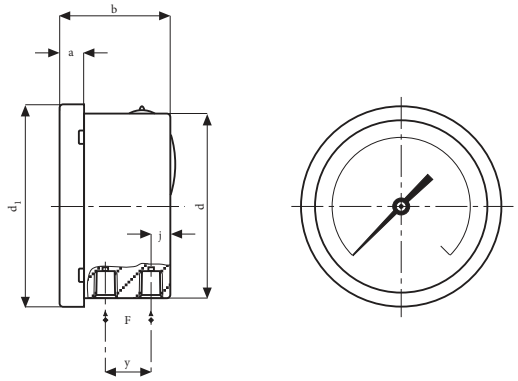

A - Lower connection

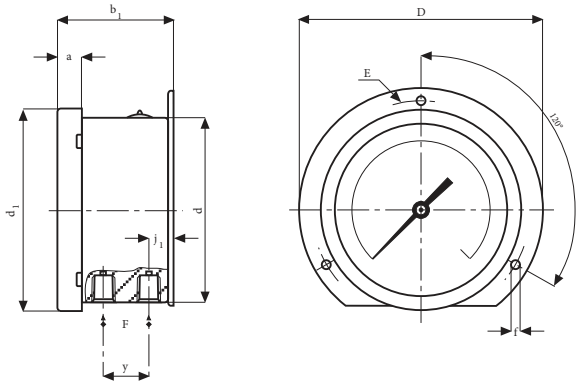

Lower (Mounting code A) , with back flange (Option code C)

F	a	a_1	b	b_1	d	d_1	D	E	f	j	j_1	y	Weight : *lbs* (kg)
23F 1/4-18 NPT	*0.51* (13)	*0.67* (17)	*2.48* (63)	*2.64* (67)	*3.98* (101)	*4.35* (110,6)	*5.28* (134)	*4.74* (120,5)	*0.24* (6)	*0.54* (13,8)	*0.70* (17,8)	*0.91* (23)	*2.20* (1)

dimensions : *inches* (mm)

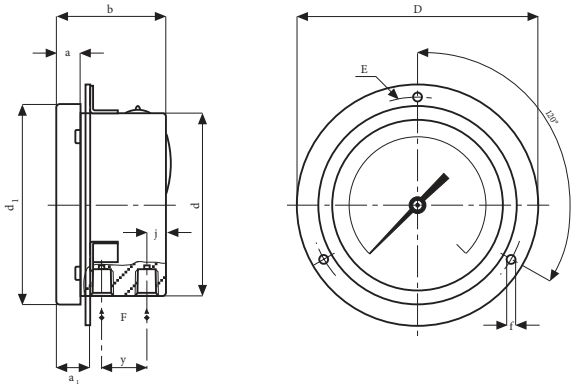

Lower (Mounting code A) , with front flange (Option code F)

OPTIONS

C -	Back flange for DN100-150 instruments
F -	Front flange for DN100 instruments
C40 -	AISI 316L st.st. case and ring
R10 -	Case glycerine filling. Ambient temp. *+32...+149°F* (0...+65 °C)
R11 -	Case filling with silicon oil. Ambient temp. *-40...+149°F* (-40...+65 °C)
T01 -	Tropicalization
T31 -	Plastic window
T32 -	Safety glass window

"HOW TO ORDER" SEQUENCE

Section	Model	Case	Mounting	Diameter	Range	Process connection	Options
2	**18**	**1**	**A**	**E**		**23F**	**C, F C40...T32**

Copyright © Nuova Fima srl. All rights reserved. Any part of this publication should not be reproduced without a written Nuova Fima's srl approval

IN ORDER TO IMPROVE THEIR PRODUCTION, MESSRS. NUOVA FIMA RESERVE THE RIGHT TO THEMSELVES TO MAKE ALL THE MODIFICATIONS THAT THEY DEEM INDISPENSABLE AT ANY TIME. UPDATED DATA-SHEETS ARE AVAILABLE ON SITE: www.nuovafima.com

NUOVA FIMA USA Inc.
www.nuovafima.com - e-mail: infousa@nuovafima.com
4123 Hollister, Suite G - TX 77080 Houston
TEL. +1 713.690.9800 - FAX +1 713.690.9803

NUOVA FIMA srl
www.nuovafima.com - e-mail: info@nuovafima.com
P.O. BOX 58 - VIA C. BATTISTI 59 - 28045 INVORIO (NO) ITALY
TEL. +39 0322 253200 - FAX +39 0322 253232

MN14

electric contacts for diaphragm pressure gauges

PED 2014/68/EU

Are accessories with movable contacts in air, which open or close electric circuits depending of the position of the indicating pointer. They are used with Bourdon tube pressure gauges, bellows, diaphragm of NUOVA FIMA production, in such way they become pressure switches: the optimal and sure solution to automatize any kind of equipment.

Contacts: sliding, magnetic snap action. Functional and constructive characteristics, wiring and electrci schemas are shown on the attached data-sheet: "ELECTRIC CONTACT".

Accuracy: when the indicating pointer is affected by the contact link add to the gauge accuracy the 50% of their accuracy (with the exclusion of the working area within the 5% if the contact is magnetic type).

Contact setting: over an arc of 270 °, trough the knob placed on front lens or trough removable key.

Electrical wiring: junction box PG9 as per DIN 43650 or cable 0,5 mt.

Ambient temperature: -25...+65 ∞C.

Protection: IP 44 as per IEC 529, (option IP 55).

Contact material: Silver-Nickel 80%-20% (options Gold-Silver and Platinum-Iridium).

Window: Makrolon.

Overpressure: non suitable.

DIMENSIONS (mm)

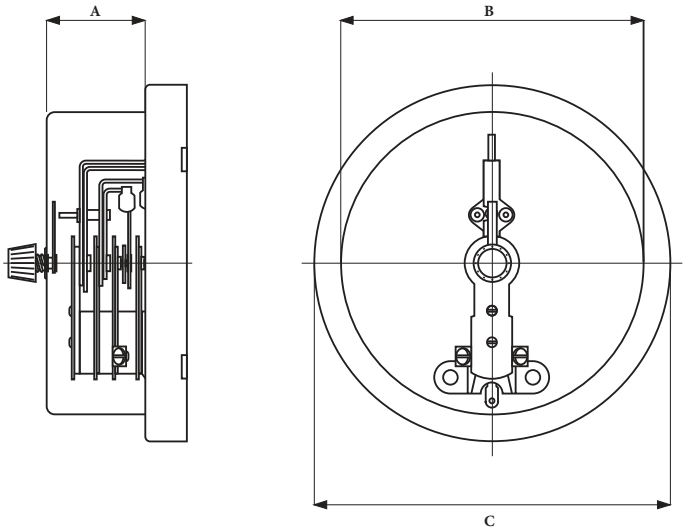

Single contact

DS	A	B	C
100	29	95	110,6
150	29	141	161

Double contacts

DS	A	B	C
100	36	95	110,6
150	36	141	161

MODEL	MN12/18 DS 4”- 6” (100-150 mm)		
Contact type	Sliding and magnetic snap-action contact		
Contact number	1	2	2 indipendent
Junction box ø exit cables: inches (mm)	3 poles + GND 0,23...0,35 (6...9)	3 poles + GND 0,23...0,35 (6...9)	
Back cable exit ø cable: inches (mm)			4 poles + 1 0,27 (7)

MODEL	MD13 DS 6” (150 mm)		
Contact type	Sliding and magnetic snap-action contact		
Contact number	1	2	2 indipendent
Radial junction box ø exit cables: inches (mm)	3 poles + GND 0,23...0,35 (6...9)	3 poles + GND 0,23...0,35 (6...9)	
Radial cable exit ø cable: inches (mm)			4 poles + 1 0,27 (7)
Back cable exit ø cable: inches (mm)	2 poles + GND (1) 0,19 (4,8)	3 poles + GND (1) 0,23 (6)	4 poles + 1 0,27 (7)

(1) for front flange mounting (cod. **E**)

MODEL	MD15-16-17 DS 4” (100 mm)			MD15-16-17 DS 6” (150 mm)		
Contact type	Sliding and magnetic snap-action contact			Sliding and magnetic snap-action contact		
Contact number	1	2	2 indipendent	1	2	2 indipendent
Radial junction box ø exit cables: inches (mm)	3 poles + GND 0,23...0,35 (6...9)	3 poles + GND 0,23...0,35 (6...9)		3 poles + GND 0,23...0,35 (6...9)	3 poles + GND 0,23...0,35 (6...9)	
Radial cable exit ø cable: inches (mm)			4 poles + 1 0,27 (7)			4 poles + 1 0,27 (7)
Back cable exit ø cable: inches (mm)	2 poles + GND (1) 0,19 (4,8)	3 poles + GND (1) 0,23 (6)	4 poles + 1 (1) 0,27 (7)	2 poles + GND (2) 0,19 (4,8)	3 poles + GND (2) 0,23 (6)	4 poles + 1 (2) 0,27 (7)

(1) for front flange mounting (cod. **F**)
(2) for front flange mounting (cod. **E**)

MODEL	MD14 DS 4” (100 mm)			MD14 DS 6” (150 mm)		
Contact type	Sliding and magnetic snap-action contact			Sliding and magnetic snap-action contact		
Contact number	1	2	2 indipendent	1	2	2 indipendent
Radial junction box ø exit cables: inches (mm)	3 poles + GND 0,23...0,35 (6...9)	3 poles + GND 0,23...0,35 (6...9)		3 poles + GND 0,23...0,35 (6...9)	3 poles + GND 0,23...0,35 (6...9)	
Radial cable exit ø cable: inches (mm)			4 poles + 1 0,27 (7)			4 poles + 1 0,27 (7)
Back cable exit ø cable: inches (mm)	2 poles + GND (1) 0,19 (4,8)	3 poles + GND (1) 0,23 (6)	4 poles + 1 (1) 0,27 (7)	2 poles + GND (2) 0,19 (4,8)	3 poles + GND (2) 0,23 (6)	4 poles + 1 (2) 0,27 (7)

(1) for front flange mounting (cod. **F**)
(2) for front flange mounting (cod. **E**)

IN ORDER TO IMPROVE THEIR PRODUCTION, MESSRS. NUOVA FIMA RESERVE THE RIGHT TO THEMSELVES TO MAKE ALL THE MODIFICATIONS THAT THEY DEEM INDISPENSABLE AT ANY TIME. UPDATED DATA-SHEETS ARE AVAILABLE ON SITE: **www.nuovafima.com**

Copyright © Nuova Fima srl. All rights reserved. Any part of this publication should not be reproduced without a written Nuova Fima's srl approval

NUOVA FIMA USA Inc.
www.nuovafima.com - e-mail: infousa@nuovafima.com
4123 Hollister, Suite G - TX 77080 Houston
TEL. +1 713.690.9800 - FAX +1 713.690.9803

NUOVA FIMA srl
www.nuovafima.com - e-mail: info@nuovafima.com
P.O. BOX 58 - VIA C. BATTISTI 59 - 28045 INVORIO (NO) ITALY
TEL. +39 0322 253200 - FAX +39 0322 253232

MD13

single diaphragm differential pressure gauges

ATEX version

DS 6" (150mm)

These instruments are used to check differential pressures of liquids wich do not have high viscosity and do not crystalizee. They resist to static pressure up to 100 bar. In presence of high temperature, high viscosity and corrosive process fluid these instruments can be fitted with remote mounting diaphragm seals. They are in conformity with the essential Health and Safety Requirements laid down in European Directive 2014/34/UE for Group II, Category 2G or 2GD equipment in the T1...T6 temperature classes. They are NOT suitable for ZONES 0 and 20.

2G9 Version , Gas

6" (DS 150 mm) size is available, as **standard** version.

They keep the same functional and constructive features as **MD13** model. This differ from it as follows :

Ambient temperature: *-22...+140 °F* (-30...+60 °C).
Max process fluid temperature: see table (measured on the lowest point of socket).
Windows: high resistance safety glass.
Dial marking: CE Ex II 2G c T6X TF9, model name and serial/lot number.
Special dial: ranges different from standard, custom artworks and dials without Nuova Fima logo are not available.
Options: electric contacts, plexiglas or tempered glass windows and maximum pointers are not available.
Included documentation: Installation manual.

Class	Process temperature
T6 : *185°F* (85°C)	*158°F* (70°C)
T5 : *212°F* (100°C)	*185°F* (85°C)
T4 : *275°F* (135°C)	*248°F* (120°C)
T3 : *392°F* (200°C)	*302°F* (150°C)
T2 : *572°F* (300°C)	
T1 : *842°F* (450°C)	

2D9 Version , Gas and Dust

6" (DS 150 mm) is available, as **IP65** or **filled** versions.

They keep the same functional and constructive features as **MD13** model. This differ from it as follows :

Damping liquids: glycerine 98%, silicon oil.
Ambient temperature:
+59...+140 °F (+15...+60 °C) for glycerine filling;
-22...+140 °F (-30...+60 °C) for silicon oil filling.
Max process fluid temperature: see table (measured on the lowest point of socket).
Windows: high resistance safety glass.
Dial marking: CE Ex II 2GD c T6X TF9 IP65 T85°C, model name and serial/lot number.
Special dial: ranges different from standard, custom artworks and dials without Nuova Fima logo are not available.
Options: electric contacts, plexiglas or tempered glass windows and maximum pointers are not available.
Included documentation: Installation manual.

MD15-MD16-MD17

double diaphragm differential pressure gauges, ATEX version DS 4", 6" (100-150mm)

These instruments are used to check differential pressures of gases, or liquids wich do not have high viscosity and do not crystalizee. They resist to static pressure up to 100, 200, 400 bar depending on model type MD15, MD16 and MD17. In presence of high temperature, high viscosity and corrosive process fluid these instruments can be fitted with remote mounting diaphragm seals. They are in conformity with the essential Health and Safety Requirements laid down in European Directive 2014/34/UE for Group II, Category 2G or 2GD equipment in the T1...T6 temperature classes. They are NOT suitable for ZONES 0 and 20.

2G9 Version , Gas

4" and 6" (DS 100-150 mm) sizes are available, as **standard** version.

They keep the same functional and constructive features as **MD15-16-17** models. They differ from them as follows :

Ambient temperature: *-22...+140 °F* (-30...+60 °C).
Max process fluid temperature: see table (measured on the lowest point of socket).
Windows: high resistance safety glass.
Dial marking: CE Ex II 2G c T6X TF9, model name and serial/lot number.
Special dial: ranges different from standard, custom artworks and dials without Nuova Fima logo are not available.
Options: electric contacts, plexiglas or tempered glass windows and maximum pointers are not available.
Included documentation: Installation manual.

Class	Process temperature
T6 : *185°F* (85°C)	*158°F* (70°C)
T5 : *212°F* (100°C)	*185°F* (85°C)
T4 : *275°F* (135°C)	*248°F* (120°C)
T3 : *392°F* (200°C)	*302°F* (150°C)
T2 : *572°F* (300°C)	
T1 : *842°F* (450°C)	

2D9 Version , Gas and Dust

4" and 6" (DS 100-150 mm) are available, as **IP65** or **filled** versions.

They keep the same functional and constructive features as **MD15-16-17** models. They differ from them as follows :

Damping liquids: glycerine 98%, silicon oil (or fluorinated fluid for **MD15** model only).
Ambient temperature:
+59...+140 °F (+15...+60 °C) for glycerine filling;
-22...+140 °F (-30...+60 °C) for silicon oil or fluorinated fluid filling.
Max process fluid temperature: see table (measured on the lowest point of socket).
Protection degree: IP 65 as per IEC 529.
Windows: high resistance safety glass.
Dial marking: CE Ex II 2GD c T6X TF9 IP65 T85°C, model name and serial/lot number.
Special dial: ranges different from standard, custom artworks and dials without Nuova Fima logo are not available.
Options: electric contacts, plexiglas or tempered glass windows and maximum pointers are not available.
Included documentation: Installation manual.

Technical File: TF9 - Rev. 1

NUOVA FIMA USA Inc.
www.nuovafima.com - e-mail: infousa@nuovafima.com
4123 Hollister, Suite G - TX 77080 Houston
TEL. +1 713.690.9800 - FAX +1 713.690.9803

NUOVA FIMA srl
www.nuovafima.com - e-mail: info@nuovafima.com
P.O. BOX 58 - VIA C. BATTISTI 59 - 28045 INVORIO (NO) ITALY
TEL. +39 0322 253200 - FAX +39 0322 253232

RG - 04/16

IN ORDER TO IMPROVE THEIR PRODUCTION, MESSRS. NUOVA FIMA RESERVE THE RIGHT TO THEMSELVES TO MAKE ALL THE MODIFICATIONS THAT THEY DEEM INDISPENSABLE AT ANY TIME. UPDATED DATA-SHEETS ARE AVAILABLE ON SITE: www.nuovafima.com

NUOVA FIMA S.r.l.
P.O. BOX 58 Via Cesare Battisti, 59
28045 Invorio (NO) Italy
Tel. +39 0322.253200
Fax +39 0322.253232
info@nuovafima.com

www.nuovafima.com

MEASURING INSTRUMENTS - STRUMENTI PER MISURARE

PRESSURE SWITCHES

NUOVA FIMA

diaphragm pressure switch

PED 2014/68/EU

These diaphragm pressure switches are IP 55, and only suitable for applications in the chemical, petrochemical and conventional power plants. The sensing element is a metallic diaphragm and acts directly on the microswitch through a self-centering pivot. The simplicity of the design, without levers, cams or similar mechanism, gives the unit an exceptionally long working life.

3.10 - Standard Model

Ranges: 0...1 bar/0...25 bar; -1...0 bar.
Electrical specifications: N. 1 SPDT microswitches. (see microswitches table)
Differential: fixed.
Repeatability: ≤ 1% of the full setting value.
Set-point adjustment: internal, micrometric adjustable.
Protection: IP 55 as per EN 60529/IEC 529.
Cable exit: cable gland (cables ø *0.24...0.43"* - 6...11 mm).
Electrical wiring: terminal screw, directly on microswitch.
Earth contacts: N. 1 internal.
Process temperature: *+212°F* max (100°C).
Ambient temperature: *-13...+149°F* (-25...+65 °C).
Thermal drift: ≤ *0,027% / °F* (≤ 0,05% / °C).
Process connection: anticorodal aluminium blue anodized, 1/4" NPT F.
Elastic element: AISI 316 st.st. diaphragm for pressure ranges ≤ 2,5 bar; carbon steel diaphragm covered with AISI 316 st.st. for pressure ranges 4...25 bar.
Gasket: PTFE.
Case: anticorodal aluminium blue anodized.
Cover: anticorodal aluminium yellow anodized.
Tag: AISI 304 st.st. silk-screen painted.
Weight: *1.87* (0,85 kg).

Setting ranges	Test pressure	Differential 1 MICRO (2)
0,05...1 bar (1)	1,3 bar	40 mbar
0,05...1,6 bar (1)	2 bar	40 mbar
0,06...2,5 bar (1)	3 bar	50 mbar
0,08...4 bar	5 bar	60 mbar
0,12...6 bar	8 bar	100 mbar
0,15...10 bar	12 bar	120 mbar
0,25...16 bar	20 bar	200 mbar
0,4...25 bar	30 bar	300 mbar

(1) available also for vacuum & compound.
(2) differential and minimum set-point values for microswitches cod. I, N, S, U are 300% of those shown in table.

RC2 - 05/14

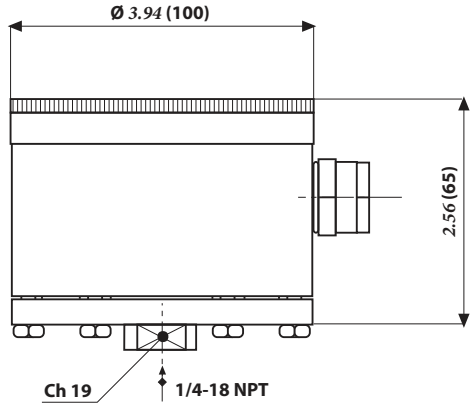

dimensions : *inches* (mm)

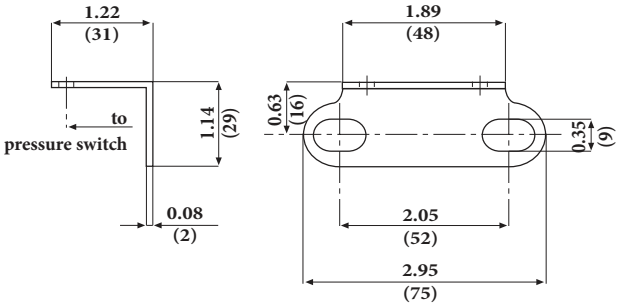

Walls mounting bracket (Cod. **S16**)

Set-point adjustment

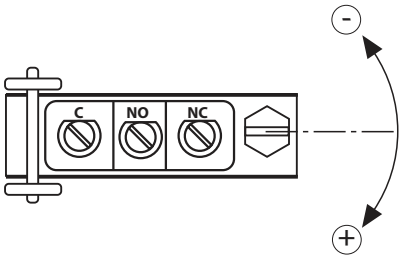

MICROSWITCHES
ohmic load

Single	Type	250 Vac	125 Vac	24 Vdc
C	std.	**15A**	**15A**	0,1A
G	SPLASH	**15A**	**15A**	0,1A
I	goldplated		**1A**	0,1A
M	inert gas filled	**15A**	**15A**	0,1A
N	goldplated and inert gas filled		**1A**	0,1A
S	SPLASH VDC	15A	15A	**6A**
U	inert gas filled VDC	15A	15A	**6A**

"HOW TO ORDER" SEQUENCE

Section	Model	Set-point Adjustment	Microswitch	Electrical connection	Process connection	Options
3	10		C, G I, M N S, U	---	23F - 1/4 NPT F	S16

Copyright © Nuova Fima srl. All rights reserved. Any part of this publication should not be reproduced without a written Nuova Fima's srl approval

NUOVA FIMA USA Inc.
www.nuovafima.com - e-mail: infousa@nuovafima.com
4123 Hollister, Suite G - TX 77080 Houston
TEL. +1 713.690.9800 - FAX +1 713.690.9803

NUOVA FIMA srl
www.nuovafima.com - e-mail: info@nuovafima.com
P.O. BOX 58 - VIA C. BATTISTI 59 - 28045 INVORIO (NO) ITALY
TEL. +39 0322 253200 - FAX +39 0322 253232

IN ORDER TO IMPROVE THEIR PRODUCTION, MESSRS. NUOVA FIMA RESERVE THE RIGHT TO THEMSELVES TO MAKE ALL THE MODIFICATIONS THAT THEY DEEM INDISPENSABLE AT ANY TIME. UPDATED DATA-SHEETS ARE AVAILABLE ON SITE: **www.nuovafima.com**

diaphragm pressure switch

PED 2014/68/EU

These diaphragm pressure switches are IP 55, and suitable for a variety of applications such as: chemical, petrochemical and conventional power station. They withstand the most unfavourable working conditions, caused by either the process fluid aggrassiveness or high ambient temperature.

3.20 - Standard Model

Ranges: 0...1 bar/0...25 bar.
Electrical specifications: N. 1 SPDT microswithch (see microswitches table).
Differential: fixed (adjustable 10%...50% of setting range (see microswitches table).
Repeatability: ≤1% of the full setting value.
Set point adjustment: internal, micrometric adjustable.
Protection: IP 55 as per EN 60529/IEC 529.
Electrical wiring: terminal screw, directly on microswitch.
Earth contacts: N. 1 internal, N. 1 external.
Process temperature: *+212°F* max (100°C).
Ambient temperature: *-13...+149°F* (-25...+65 °C).
Thermal drift: ≤ *0,027% / °F* (≤ 0,05% / °C).
Process connection: AISI 316L st.st.
Elastic element: AISI 316 Ti st.st. diaphragm, welded.
Case: aluminium, blue polyurethane painted.
Cover: aluminium beige polyurethane painted.
Tag: AISI 304 st.st., silk-screen painted.
Weight: *4.73 lbs* (1,15 kg).

Setting range	Test pressure	Differential 1 micro (1)
0,06...1 bar	1,5 ap	40 мбар
0,1...2,5 bar	3 ap	60 мбар
0,1...4 bar	5 ap	70 мбар
0,15...6 bar	8 ap	100 мбар
0,2...10 bar	13 ap	120 мбар
0,3...16 bar	20 ap	200 мбар
0,4...25 bar	30 ap	350 мбар

(1) differential and minimum set-point values for microswitches cod. I, N, S, U are 300% of those shown in table.

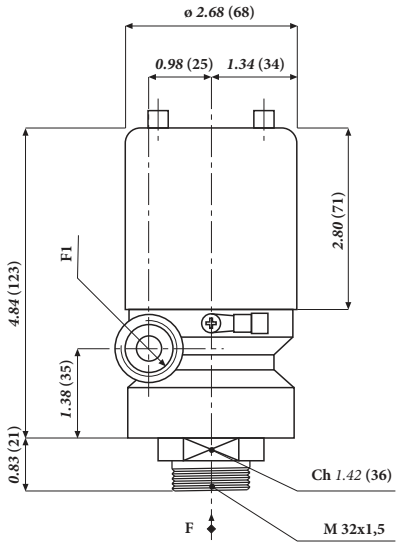

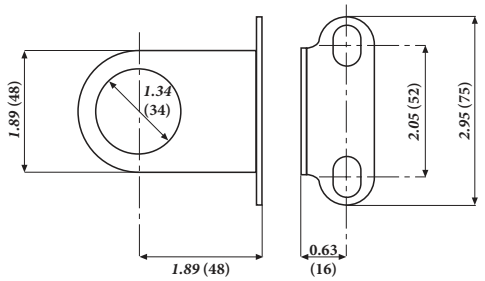

dimensions : *inches* (mm)

F1	
1 -	R 1/2-ISO 7/1
3 -	1/2-14 NPT
P11 -	cable gland

F	
41M -	G 1/2 B
43M -	1/2-14 NPT
23F -	R 1/4-18 NPT F

Set-point adjustment

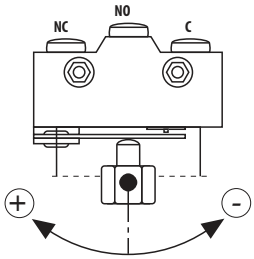

MICROSWITCHES
ohmic load

Single	Type	250 Vac	125 Vac	24 Vdc
C	std.	**15A**	**15A**	0,1A
G	SPLASH	**15A**	**15A**	0,1A
I	goldplated		**1A**	0,1A
M	inert gas filled	**15A**	**15A**	0,1A
N	goldplated and inert gas filled		**1A**	0,1A
E	adjustable dead band	**20A**	**20A**	0,1A
S	SPLASH VDC	15A	15A	**6A**
U	inert gas filled VDC	15A	15A	**6A**

OPTIONS

P02 -	Degreasing for oxygen
S16 -	Mounting bracket
T01 -	Tropicalisation
V20 -	Epoxy painting

"HOW TO ORDER" SEQUENCE

Section / Model / Set-point Adjustment / Microswitch / Electrical connection / Process connection /Options

3	**20**	**C, G**	**1**	**41M**	**P02...V20**
		I, M	**3**	**43M**	
		N, E	**P11**	**23F**	
		S, U			

Copyright © Nuova Fima srl. All rights reserved. Any part of this publication should not be reproduced without a written Nuova Fima's srl approval

NUOVA FIMA USA Inc.
www.nuovafima.com - e-mail: infousa@nuovafima.com
4123 Hollister, Suite G - TX 77080 Houston
TEL. +1 713.690.9800 - FAX +1 713.690.9803

NUOVA FIMA srl
www.nuovafima.com - e-mail: info@nuovafima.com
P.O. BOX 58 - VIA C. BATTISTI 59 - 28045 INVORIO (NO) ITALY
TEL. +39 0322 253200 - FAX +39 0322 253232

IN ORDER TO IMPROVE THEIR PRODUCTION, MESSRS. NUOVA FIMA RESERVE THE RIGHT TO THEMSELVES TO MAKE ALL THE MODIFICATIONS THAT THEY DEEM INDISPENSABLE AT ANY TIME. UPDATED DATA-SHEETS ARE AVAILABLE ON SITE: **www.nuovafima.com**

diaphragm pressure switch

PED 2014/68/EU

These diaphragm pressure switches are IP 55, and suitable for a variety of applications such as: chemical, petrochemical and conventional power station. They withstand the most unfavourable working conditions, caused by either the process fluid aggressiveness or high ambient temperature.

3.25 - Standard Model

Ranges: 0...40 mbar/0...600 mbar.
Electrical specifications: N. 1 SPDT microswitches. (see microswitches table)
Differential: fixed.
Ripeatability: ≤1% of the full setting value.
Set point adjustment: internal, micrometric adjustable.
Protection: IP 55 as per EN 60529/IEC 529
Electrical wiring: terminal screw, directly on microswitch.
Earth contacts: N. 1 internal, N. 1 external.

Process temperature: *+212°F* max (100°C).
Ambient temperature: *-13...+149°F* (-25...+65 ∞C).
Thermal drift: ≤ *0,027% / °F* (≤ 0,05% / °C).
Process connection: AISI 316L st.st.
Elastic element: AISI 316 Ti st.st. diaphragm.
Gasket: PTFE
Case: aluminium, blue polyurethane painted.
Cover: aluminium, beige polyurethane painted.
Tag: stainless steel, silk-screen painted.
Weight: *6.61 lbs* (3 kg).

Setting range	Test pressure	Differential 1 micro (1)
5...40 mbar	0,5 bar	4 mbar
5...60 mbar	0,5 bar	4 mbar
5...100 mbar	0,5 bar	4 mbar
8...160 mbar	0,5 bar	6 mbar
8...250 mbar	1 bar	6 mbar
15...400 mbar	1 bar	10 mbar
15...600 mbar	1 bar	10 mbar

(1) differential and minimum set-point values for microswitches cod. I, N, S, U are 300% of those shown in table.

RG-05/14

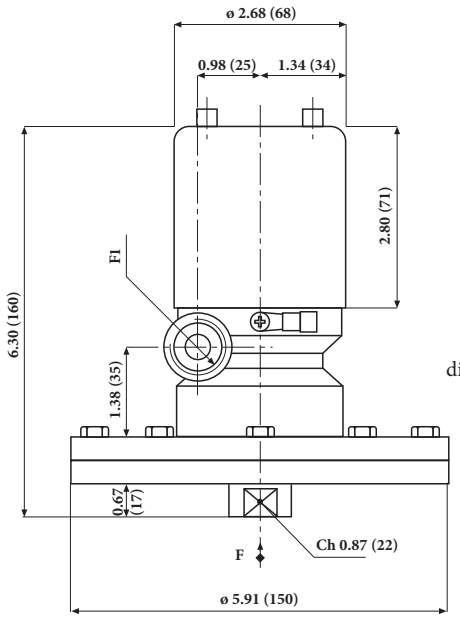

dimensions : *inches* (mm)

F1
1 - R 1/2-ISO 7/1
3 - 1/2-14 NPT
P11 - cable gland

F
43F - R 1/2-18 NPT F
43M - 1/2-14 NPT
41M - G 1/2 B

Set-point adjustment

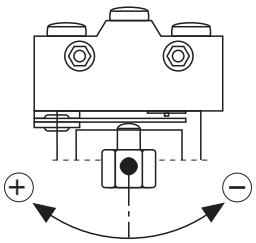

MICROSWITCHES
ohmic load

Single	Type	250 Vac	125 Vac	24 Vdc
C	std.	**15A**	**15A**	0,1A
G	SPLASH	**15A**	**15A**	0,1A
I	goldplated		**1A**	0,1A
M	inert gas filled	**15A**	**15A**	0,1A
N	goldplated and inert gas filled		**1A**	0,1A
S	SPLASH VDC	15A	15A	**6A**
U	inert gas filled VDC	15A	15A	**6A**

OPTIONS

P02 - Degreasing for oxygen
S16 - Wall mounting bracket
T01 - Tropicalisation
V20 - Epoxy painting

"HOW TO ORDER" SEQUENCE

Section / Model / Set-point Adjustment / Microswitch / Electrical connection / Process connection /Options

3	**25**	**C, G**	**1**	**41M**	**P02...V20**
		I, M	**3**	**43M**	
		N, E	**P11**	**43F**	
		S, U			

Copyright © Nuova Fima srl. All rights reserved. Any part of this publication should not be reproduced without a written Nuova Fima's srl approval

IN ORDER TO IMPROVE THEIR PRODUCTION, MESSRS. NUOVA FIMA RESERVE THE RIGHT TO THEMSELVES TO MAKE ALL THE MODIFICATIONS THAT THEY DEEM INDISPENSABLE AT ANY TIME. UPDATED DATA-SHEETS ARE AVAILABLE ON SITE: **www.nuovafima.com**

NUOVA FIMA USA Inc.
www.nuovafima.com - e-mail: infousa@nuovafima.com
4123 Hollister, Suite G - TX 77080 Houston
TEL. +1 713.690.9800 - FAX +1 713.690.9803

NUOVA FIMA srl
www.nuovafima.com - e-mail: info@nuovafima.com
P.O. BOX 58 - VIA C. BATTISTI 59 - 28045 INVORIO (NO) ITALY
TEL. +39 0322 253200 - FAX +39 0322 253232

diaphragm pressure switch

PED 2014/68/EU

These diaphragm pressure switches are IP 65, and suitable for a variety of applications such as: chemical, petrochemical, conventional power station, and they withstand the most unfavourable working conditions, caused by either the process fluid aggressiveness or high ambient temperature. The sensing element is a metallic diaphragm and acts directly on the microswitch through a self-centering pivot. The simplicity of the design, without levers, cams or similar mechanism, gives the unit an exceptionally long working life.

3.27 - Standard Model

Electrical specifications: N. 1...2 SPDT microswitches (see microswitches table).
Differential: fixed (adjustable 10%...50% of setting range for pressure ranges ≥ 1 bar (see microswitches table).
Repeatability: ≤ 1% of the full setting value.
Set-point adjustment: internal, micrometric adjustable.
Protection: IP 65 as per EN 60529/IEC 529.
Electrical wiring: terminal strip.
Earth contact: N. 1 internal.
Process temperature: *+212°F* max (100°C).
Ambient temperature: *-13...+149°F* (-25...+65 ∞C).
Thermal drift: ≤ *0,027% / °F* (≤ 0,05% / °C).
Process connection: AISI 316 st.st.
Elastic element: AISI 316 st.st. diaphragm for pressure ranges ≤ 2,5 bar; carbon steel diaphragm covered with AISI 316 st.st. for pressure ranges 4...100 bar.
Gasket: PTFE.
Case: AISI 304 st.st.
Cover: AISI 304 st.st., bayonet lock.
Tag: AISI 304 st.st., etched.

Setting range	Test pressure	Special overrange (cod. F03)	Differential 1 micro (2)	Differential 2 micro (2)
0,7...6 mbar (1)	10 mbar		0,5 mbar	
1...16 mbar (1)	20 mbar		0,8 mbar	
2...25 mbar (1)	30 mbar		1,2 mbar	
5...40 mbar (1)	0,5 bar	400 mbar	4 mbar	5 mbar
5...60 mbar (1)	0,5 bar	600 mbar	4 mbar	5 mbar
6...100 mbar (1)	0,5 bar	1 bar	4 mbar	6 mbar
9...160 mbar (1)	0,5 bar	1,6 bar	6 mbar	9 mbar
9...250 mbar (1)	1 bar	2,5 bar	6 mbar	9 mbar
15...400 mbar (1)	1 bar	4 bar	10 mbar	15 mbar
18...600 mbar (1)	1 bar	6 bar	12 mbar	18 mbar
0,06...1 bar (1)	1,2 bar	10 bar	25 mbar	60 mbar
0,06...1,6 bar (1)	2 bar	16 bar	30 mbar	60 mbar
0,06...2,5 bar (1)	3 bar	25 bar	40 mbar	60 mbar
0,08...4 bar	5 bar	40 bar	50 mbar	80 mbar
0,09...6 bar	8 bar	40 bar	60 mbar	90 mbar
0,15...10 bar	12 bar	40 bar	100 mbar	150 mbar
0,25...16 bar	20 bar	40 bar	160 mbar	250 mbar
0,4...25 bar	30 bar	40 bar	250 mbar	400 mbar
0,6...40 bar	48 bar	60 bar	400 mbar	600 mbar
0,9...60 bar	70 bar	80 bar	600 mbar	900 mbar
6...100 bar	120 bar		4 bar	6 bar
8...160 bar	185 bar		5 bar	8 bar

(1) also available for vacuum and compound
(2) differential and minimum set-point values for microswitches cod. I, L, N, R, S, T, U, V are 300% of those shown in table.

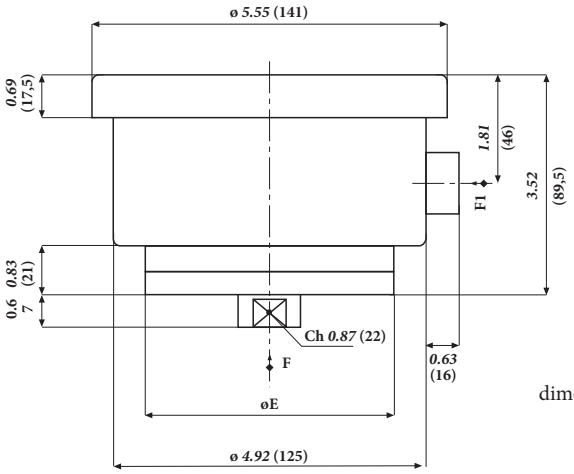

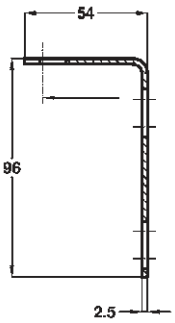

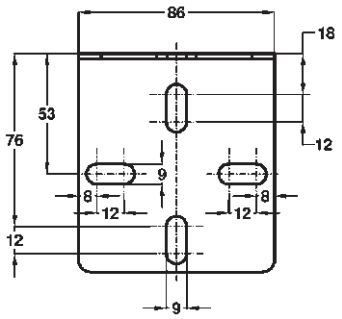

dimensions : *inches* (mm)

Setting ranges	E	Weight : lbs (kg)
≤ 600 mbar	*5.91* (150)	*7.27* (3,3)
≥ 1 bar	*3.86* (98)	*5.05* (2,3)

F
23F - 1/4-18 NPT F
43M - 1/2-14 NPT
43F - 1/2-14 NPT F
41M - G 1/2 A

F1
1 - R 1/2-ISO 7/1
2 - R 3/4-ISO 7/1
3 - 1/2-14 NPT
4 - 3/4-14 NPT
A - M20 x 1,5
P11 - cable gland

Set-point adjustment

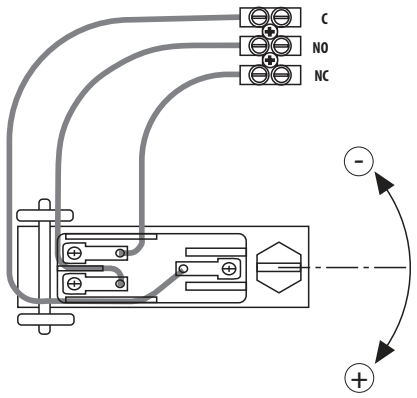

MICROSWITCHES
ohmic load

Single / Double	Type		250 Vac	125 Vac	24 Vdc
C/D	std.		**15A**	**15A**	0,1A
G / H	SPLASH	(1)	**15A**	**15A**	0,1A
I / L	goldplated	(1)		**1A**	0,1A
M/ P	inert gas filled	(1)	**15A**	**15A**	0,1A
N / R	goldplated and inert gas filled	(1)		**1A**	0,1A
E	adjustable dead band	(2)	**20A**	**20A**	0,1A
S / T	SPLASH VDC	(1)	15A	15A	**6A**
U / V	inert gas filled VDC	(1)	15A	15A	**6A**

(1) for pressure ranges ≥ 40 mbar
(2) for pressure ranges ≥ 1 bar

OPTIONS

F03 - Special overpressure stop	**E30** - Nace MR 01.03 version (1)
M26 - PTFE diaphragm	**M23** - Monel diaphragm
S16 - Wall mounting bracket	**M22** - Hastelloy C diaphragm
T01 - Tropicalization	**M29** - Tantalum diaphragm
P02 - Oxygen service	**S31** - 2"stake's mounting bracket

(1) Monel or Hastelloy C diaphragm.

"HOW TO ORDER" SEQUENCE

Section / Model / Set-point Adjustment / Microswitch / Electrical connection / Process connection /Options

3	**27**	**A, B, G, H**	**1**	**23F**	**F03...S31**
		I, L, M, P	**2**	**43M**	
		N, R, E	**3**	**43F**	
		S, T, U, V	**4**	**41M**	
			A		
			P11		

Copyright © Nuova Fima srl. All rights reserved. Any part of this publication should not be reproduced without a written Nuova Fima's srl approval

NUOVA FIMA USA Inc.
www.nuovafima.com - e-mail: infousa@nuovafima.com
4123 Hollister, Suite G - TX 77080 Houston
TEL. +1 713.690.9800 - FAX +1 713.690.9803

NUOVA FIMA srl
www.nuovafima.com - e-mail: info@nuovafima.com
P.O. BOX 58 - VIA C. BATTISTI 59 - 28045 INVORIO (NO) ITALY
TEL. +39 0322 253200 - FAX +39 0322 253232

RC2 - 05/14

IN ORDER TO IMPROVE THEIR PRODUCTION, MESSRS. NUOVA FIMA RESERVE THE RIGHT TO THEMSELVES TO MAKE ALL THE MODIFICATIONS THAT THEY DEEM INDISPENSABLE AT ANY TIME. UPDATED DATA-SHEETS ARE AVAILABLE ON SITE: www.nuovafima.com

differential pressure switches

PED 2014/68/EU

These differential pressure switches are IP 65, and suitable for a variety of applications such as: chemical, petrochemical, conventional power station where it is required to control differential pressure, level, flow. The sensing element is a metallic diaphragm with 2 metallic bellows and acts directly on the microswitch through a self-centering pivot. The simplicity of the design, without levers, cams or similar mechanism, gives the unit an exceptionally long working life.

3.28 - Standard Model

Ranges: 0...1 bar/0...10 bar.
Electrical specifications: N. 1...2 SPDT microswitches (see microswitches table).
Differential: fixed (adjustable 10%...50% of setting range (see microswitches table).
Repeatability: ≤ 1% of the full setting value.
Set-point adjustment: internal, micrometric adjustable.
Protection: IP 65 as per EN60529/IEC 529.
Electrical wiring: terminal strip.
Earth contacts: N. 1 internal.

Process temperature: *+212°F* max (100°C).
Ambient temperature: *-13...+149°F* (-25...+65 ∞C).
Thermal drift: ≤ *0,027% / °F* (≤ 0,05% / °C).
Process connection: AISI 316 st. st.
Elastic element: AISI 316 st.st. diaphragm with N.2 AISI 321 st.st. bellows; PTFE gasket.
Case: AISI 304 st.st.
Cover: AISI 304 st.st. bayonet lock.
Flushing plugs: AISI 316 st.st.
Tag: AISI 304 st.st., etched.
Weight: *8.15 lbs* (3,7 kg).

Setting ranges	One side static pressure	Both side static pressure	Differential 1 micro (1)	Differential 2 micro (1)
0,1...1 bar	10 bar	25 bar	60 mbar	80 mbar
0,1...2,5 bar	15 bar	25 bar	60 mbar	80 mbar
0,2...4 bar	15 bar	25 bar	70 mbar	100 mbar
0,2...6 bar	15 bar	25 bar	100 mbar	150 mbar
0,2...10 bar	15 bar	25 bar	120 mbar	170 mbar

(1) differential and minimum set-point values for microswitches cod. I, L, N, R, S, T, U, V are 300% of those shown in table.

RC2 - 08/14

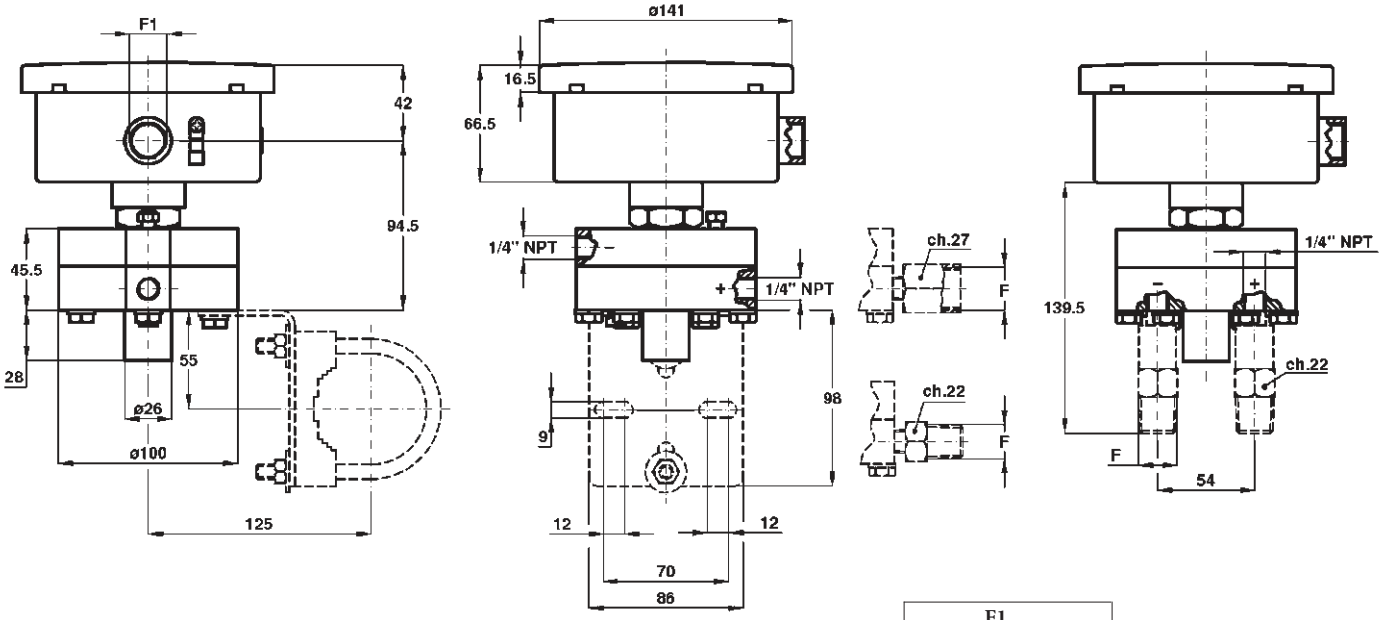

F
23F - 1/4-18 NPT F
43M - 1/2-14 NPT
43F - 1/2-14 NPT F
41M - G 1/2 A

dimensions : mm

F1
1 - R 1/2-ISO 7/1
2 - R 3/4-ISO 7/1
3 - 1/2-14 NPT
4 - 3/4-14 NPT
A - M20 x 1,5
P11 - cable gland

Set-point adjustment

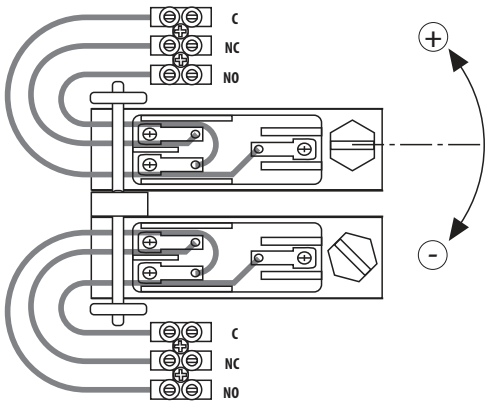

MICROSWITCHES
ohmic load

Single/ Double	Type	250 Vac	125 Vac	24 Vdc
C / D	std.	**15A**	**15A**	0,1A
G / H	SPLASH	**15A**	**15A**	0,1A
I / L	goldplated		**1A**	0,1A
M / P	inert gas filled	**15A**	**15A**	0,1A
N / R	goldplated and inert gas filled		**1A**	0,1A
E / F	adjustable dead band	**20A**	**20A**	0,1A
S / T	SPLASH VDC	15A	15A	**6A**
U / V	inert gas filled VDC	15A	15A	**6A**

OPTIONS

APV -	Lower connection
P02 -	Degreasing for oxygen
S31 -	2"stake's mounting bracket
T01 -	Tropicalisation

"HOW TO ORDER" SEQUENCE

Section / Model / Set-point Adjustment / Microswitch / Electrical connection / Process connection /Options

3	**28**	**A, B, G, H**	**1**	**APV**	**P02...T01**
		I, L, M, P	**2**	**23F**	
		N, R, E, F	**3**	**43M**	
		S, T, U, V	**4**	**43F**	
			A	**41M**	
			P11		

Copyright © Nuova Fima srl. All rights reserved. Any part of this publication should not be reproduced without a written Nuova Fima's srl approval

IN ORDER TO IMPROVE THEIR PRODUCTION, MESSRS. NUOVA FIMA RESERVE THE RIGHT TO THEMSELVES TO MAKE ALL THE MODIFICATIONS THAT THEY DEEM INDISPENSABLE AT ANY TIME. UPDATED DATA-SHEETS ARE AVAILABLE ON SITE: www.nuovafima.com

NUOVA FIMA USA Inc.
www.nuovafima.com - e-mail: infousa@nuovafima.com
4123 Hollister, Suite G - TX 77080 Houston
TEL. +1 713.690.9800 - FAX +1 713.690.9803

NUOVA FIMA srl
www.nuovafima.com - e-mail: info@nuovafima.com
P.O. BOX 58 - VIA C. BATTISTI 59 - 28045 INVORIO (NO) ITALY
TEL. +39 0322 253200 - FAX +39 0322 253232

differential pressure switches

PED 2014/68/EU

These differential pressure switches are IP 65, and suitable for a variety of applications such as: chemical, petrochemical, conventional power station where it is required to control differential pressure, level, flow. The sensing element is a metallic diaphragm with 2 metallic bellows and acts directly on the microswitch through a self-centering pivot. The simplicity of the design, without levers, cams or similar mechanism, gives the unit an exceptionally long working life.

3.29 - Standard Model

Ranges: 0...250 mbar/0...600 mbar.
Electrical specifications: N. 1...2 SPDT microswitches (see microswitches table).
Differential: fixed.
Repeatability: ≤ 1% of the full setting value.
Set-point adjustment: internal, micrometric adjustable.
Protection: IP 65 as per EN 60529/IEC 529.
Electrical wiring: terminal strip.
Earth contacts: N. 1 internal.

Process temperature: *+212°F* max (100°C).
Ambient temperature: *-13...+149°F* (-25...+65 ∞C).
Thermal drift: ≤ *0,027% / °F* (≤ 0,05% / °C).
Process connection: AISI 316 st. st.
Elastic element: AISI 316 st.st. diaphragm with N.2 AISI 321 st.st. bellows; PTFE gasket.
Case: AISI 304 st.st.
Cover: AISI 304 st.st. bayonet lock.
Flushing plugs: AISI 316 st.st.
Tag: AISI 304 st.st., etched.
Weight: *13.66 lbs* (6,2 kg).

Setting ranges	One side static pressure	Both side static pressure	Differential 1 micro (1)	Differential 2 micro (1)
20...250 mbar	2,5 bar	4 bar	10 mbar	15 mbar
25...400 mbar	4 bar	4 bar	16 mbar	20 mbar
35...600 mbar	4 bar	4 bar	20 mbar	30 mbar

(1) differential and minimum set-point values for microswitches cod. I, L, N, R, S, T, U, V are 300% of those shown in table.

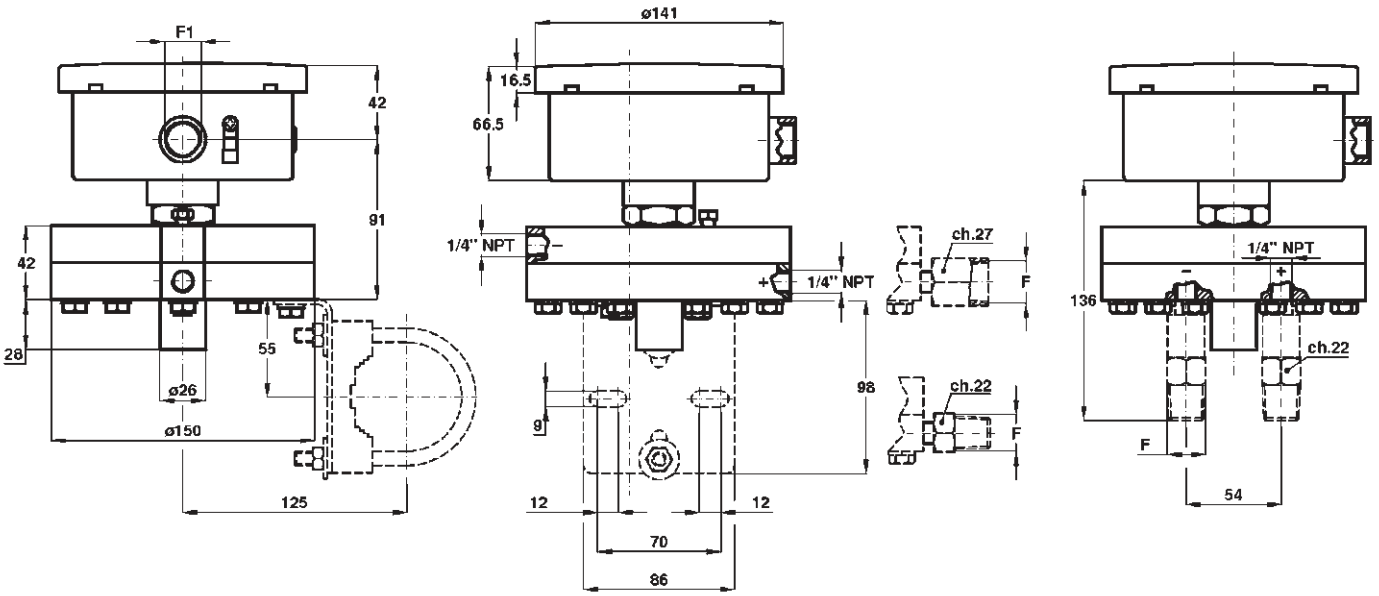

F
23F - 1/4-18 NPT F
43M - 1/2-14 NPT
43F - 1/2-14 NPT F
41M - G 1/2 A

dimensions : mm

F1
1 - R 1/2-ISO 7/1
2 - R 3/4-ISO 7/1
3 - 1/2-14 NPT
4 - 3/4-14 NPT
A - M20 x 1,5
P11 - cable gland

Set-point adjustment

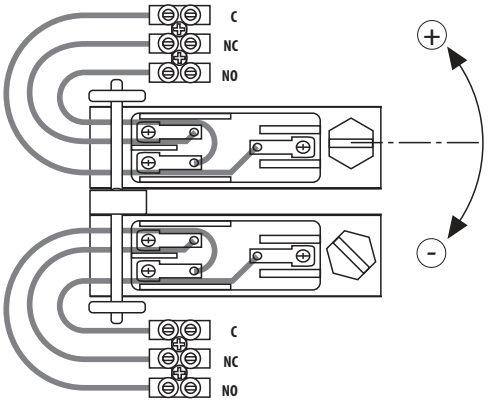

MICROSWITCHES
ohmic load

Single / Double	Type	250 Vac	125 Vac	24 Vdc
C / D	std.	**15A**	**15A**	0,1A
G / H	SPLASH	**15A**	**15A**	0,1A
I / L	goldplated		**1A**	0,1A
M / P	inert gas filled	**15A**	**15A**	0,1A
N / R	goldplated and inert gas filled		**1A**	0,1A
S / T	SPLASH VDC	15A	15A	**6A**
U / V	inert gas filled VDC	15A	15A	**6A**

OPTIONS

APV -	Lower connection
P02 -	Degreasing for oxygen
S31 -	2"stake's mounting bracket
T01 -	Tropicalisation

"HOW TO ORDER" SEQUENCE

Section / Model / Set-point Adjustment / Microswitch / Electrical connection / Process connection /Options

Section	Model	Set-point Adjustment	Microswitch	Electrical connection	Process connection	Options
3	**29**		**A, B, G, H**	**1**	**APV**	**P02...T01**
			I, L, M, P	**2**	**23F**	
			N, R	**3**	**43M**	
			S, T, U, V	**4**	**43F**	
				A	**41M**	
				P11		

Copyright © Nuova Fima srl. All rights reserved. Any part of this publication should not be reproduced without a written Nuova Fima's srl approval

RQ - 06/14

IN ORDER TO IMPROVE THEIR PRODUCTION, MESSRS. NUOVA FIMA RESERVE THE RIGHT TO THEMSELVES TO MAKE ALL THE MODIFICATIONS THAT THEY DEEM INDISPENSABLE AT ANY TIME. UPDATED DATA-SHEETS ARE AVAILABLE ON SITE: www.nuovafima.com

NUOVA FIMA USA Inc.
www.nuovafima.com - e-mail: infousa@nuovafima.com
4123 Hollister, Suite G - TX 77080 Houston
TEL. +1 713.690.9800 - FAX +1 713.690.9803

NUOVA FIMA srl
www.nuovafima.com - e-mail: info@nuovafima.com
P.O. BOX 58 - VIA C. BATTISTI 59 - 28045 INVORIO (NO) ITALY
TEL. +39 0322 253200 - FAX +39 0322 253232

bourdon tube pressure switch

PED 2014/68/EU

These bourdon tube pressure switches are IP 55, and suitable for a variety of applications such as: chemical, petrochemical, conventional power station where the operating pressure is middle-high. They withstand the most unfavourable working conditions, caused by either the process fluid aggressiveness or high ambient temperature.

3.30 - Standard Model

Ranges: 0...10/0...600 bar.
Electrical specifications: N. 1...2 SPDT microswitches (see microswitches table)
Differential: fixed, or adjustable 10%...50% of setting range (see microswitches tables).
Repeatability: ≤ 1% of the full setting value.
Set-point adjustment: internal but also external accessible, micrometric adjustable.
Protection: IP 55 as per EN 60529/IEC 529.

Electrical wiring: terminal strip.
Earth contacts: N. 1 internal, N. 1 external.
Process temperature: *max 302°F* (150°C).
Ambient temperature: *-13...+149°F* (-25...+65 °C).
Thermal drift: ≤ *0,027% / °F* (≤ 0,05% / °C).
Process connection: AISI 316L st. st.
Elastic element: AISI 316L st.st. seamless tube.
Case: aluminium, blue polyurethane painted.
Cover: aluminium, beige polyurethane painted.
Tag: AISI 304 st.st. silk-screen printed.
Weight: *4.62 lbs* (2,1 kg).

Setting ranges	Test pressures	Differential 1 micro (1)	Differential 2 micros (1)
0,4...10 bar	15 bar	0,2 bar	0,3 bar
0,7...16 bar	25 bar	0,25 bar	0,5 bar
0,7...25 bar	35 bar	0,3 bar	0,5 bar
1...40 bar	60 bar	0,5 bar	0,7 bar
1,5...60 bar	80 bar	1 bar	1,3 bar
2...100 bar	135 bar	1,4 bar	1,8 bar
4...160 bar	210 bar	2,2 bar	2,9 bar
6...250 bar	350 bar	3,5 bar	4 bar
8...400 bar	500 bar	5 bar	6 bar
10...600 bar	800 bar	7 bar	8 bar

(1) differential and minimum set-point values for microswitches cod. I, L, N, R, S, T, U, V are 300% of those shown in table.

R4 - 08/14

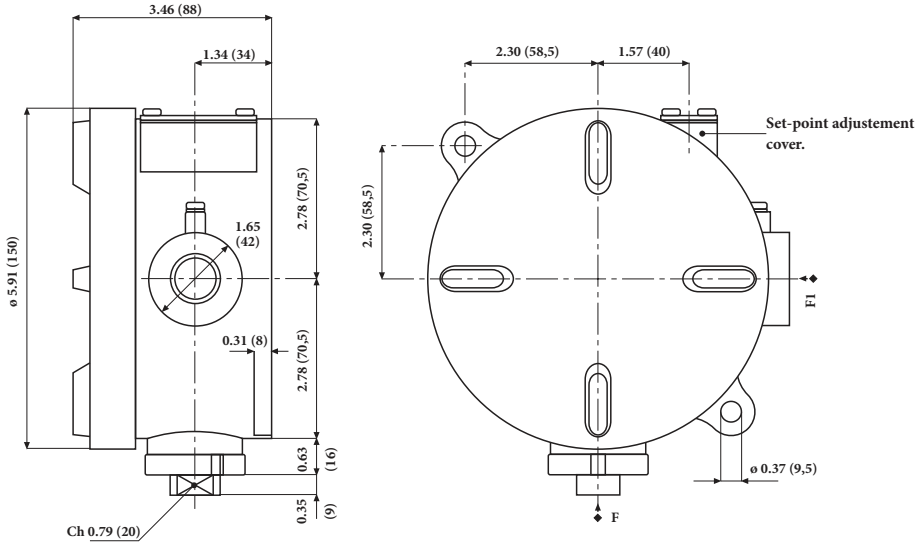

(dimensions : mm)

F1	
1 -	R 1/2-ISO 7/1
2 -	R 3/4-ISO 7/1
3 -	1/2-14 NPT
4 -	3/4-14 NPT
P11 -	cable gland

F	
41M -	G 1/2 B
43M -	1/2-14 NPT
23F -	1/4-18 NPT F
43F -	1/2-14 NPT F

Set-point adjustment

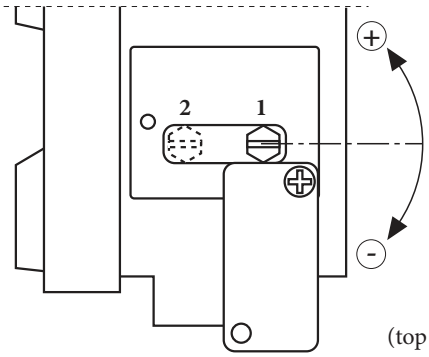

(top view)

MICROSWITCHES
ohmic load

Single / Double	Type	250 Vac	125 Vac	24 Vdc
C/D	std.	**15A**	**15A**	0,1A
G/H	SPLASH	**15A**	**15A**	0,1A
I / L	goldplated		**1A**	0,1A
M/ P	inert gas filled	**15A**	**15A**	0,1A
N / R	goldplated and inert gas filled		**1A**	0,1A
E	adjustable dead band	**20A**	**20A**	0,1A
S /T	SPLASH VDC	15A	15A	**6A**
U / V	inert gas filled VDC	15A	15A	**6A**

OPTIONS

P02 -	Degreasing for oxygen
S31 -	2"stake's mounting bracket
V20 -	Epoxy painting
T01 -	Tropicalisation

"HOW TO ORDER" SEQUENCE

Section / Model / Set-point Adjustment / Microswitch / Electrical connection / Process connection /Options

Section	Model	Set-point Adjustment	Microswitch	Electrical connection	Process connection	Options
3	30		C, D, G, H	1	41M	P02...T01
			I, L, M, P	2	43M	
			N, R, E	3	23F	
			S, T, U, V	4	43F	
				A		

Copyright © Nuova Fima srl. All rights reserved. Any part of this publication should not be reproduced without a written Nuova Fima's srl approval

IN ORDER TO IMPROVE THEIR PRODUCTION, MESSRS. NUOVA FIMA RESERVE THE RIGHT TO THEMSELVES TO MAKE ALL THE MODIFICATIONS THAT THEY DEEM INDISPENSABLE AT ANY TIME. UPDATED DATA-SHEETS ARE AVAILABLE ON SITE: www.nuovafima.com

NUOVA FIMA USA Inc.
www.nuovafima.com - e-mail: infousa@nuovafima.com
4123 Hollister, Suite G - TX 77080 Houston
TEL. +1 713.690.9800 - FAX +1 713.690.9803

NUOVA FIMA srl
www.nuovafima.com - e-mail: info@nuovafima.com
P.O. BOX 58 - VIA C. BATTISTI 59 - 28045 INVORIO (NO) ITALY
TEL. +39 0322 253200 - FAX +39 0322 253232

diaphragm pressure switches
ATEX flameproof enclosure

PED 2014/68/EU

II 2 GD Ex db IIC T6 Ex tb IIIC T85°C

Certificate :
0425 ATEX 2634

These flameproof electrical apparatus comply with European Directive ATEX 2014/34/EU, for group II and category 2 GD. They are suitable for a variety of uses in hazardous zones 1, 2, 21 and 22 in which the use of flameproof instrument is required. The sensing element is a metallic diaphragm and acts directly on the microswitch through a self-centering pivot. The simplicity of the design, without levers, cams or similar mechanisms, gives the unit an exceptionally long working life.

3.40

Type of ignition protection as per EN 60079-0 and EN 60079-1: **Ex db IIc T6 Ex tb IIIC T85°C**.

Protection: IP 65 as per EN 60529.

Ranges: 0...1 bar/0...160 bar; -1...0 bar.

Electrical specifications: N. 1...2 SPDT microswitches, or N.1 with adjustable differential (see microswitches table).

Differential: fixed, or adjustable 10%...50% of setting range (see microswitches table).

Repeatability: ≤ 1% of the full setting value.

Set-point adjustment: internal, micrometric adjustable.

Earth contacts: N. 1 internal, N. 1 external.

Process fluid temperature: *-4...+140°F* (-20...+60 °C).

Ambient temperature: *-4...+149°F* (-20...+65 °C).

Thermal drift: ≤ *0,027% / °F* (≤ 0,05% / °C).

Process connection: AISI 316 L st.st.

Elastic element: AISI 316 st.st. diaphragm for pressure ranges ≤ 2,5 bar; carbon steel diaphragm covered with AISI 316 L st.st. for pressure ranges > 2,5 bar. Diaphragm PTFE gasket.

Case: aluminium, blue polyurethane painted.

Cover: aluminium, beige polyurethane painted.

Tag: AISI 304 st.st., etched.

Tell-tale vents: polypropylene.

Weight: *6.39 lbs* (2,9 kg).

Setting ranges	Test pressure	Special overrange (cod. F03)	Differential 1 micro (2)	Differential 2 micro (2)
0,06...1 bar (1)	1,2 bar	10 bar	25 mbar	60 mbar
0,06...1,6 bar (1)	2 bar	10 bar	30 mbar	60 mbar
0,06...2,5 bar (1)	3 bar	10 bar	40 mbar	60 mbar
0,08...4 bar	5 bar	15 bar	50 mbar	80 mbar
0,09...6 bar	8 bar	15 bar	60 mbar	90 mbar
0,15...10 bar	12 bar	20 bar	100 mbar	150 mbar
0,25...16 bar	20 bar	30 bar	160 mbar	250 mbar
0,4...25 bar	30 bar	35 bar	250 mbar	400 mbar
0,6...40 bar	48 bar	60 bar	400 mbar	600 mbar
0,9...60 bar	70 bar	80 bar	600 mbar	900 mbar
6...100 bar	120 bar		4 bar	6 bar
8...160 bar	185 bar		5 bar	8 bar

(1) also available for vacuum and compound
(2) differential and minimum set-point values for microswitches cod. I, L, N, R, S, T, U, V are 300% of those shown in table.

RG - 05/14

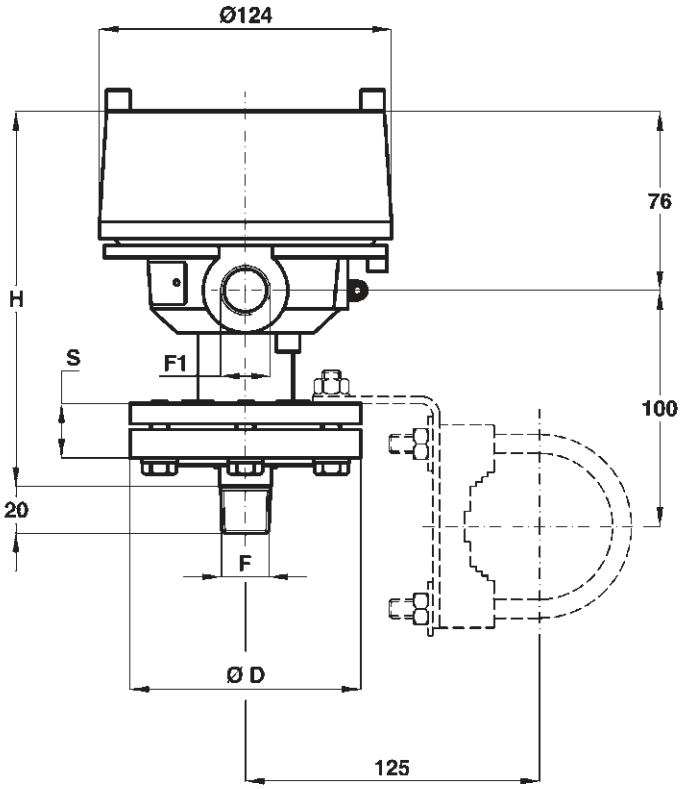

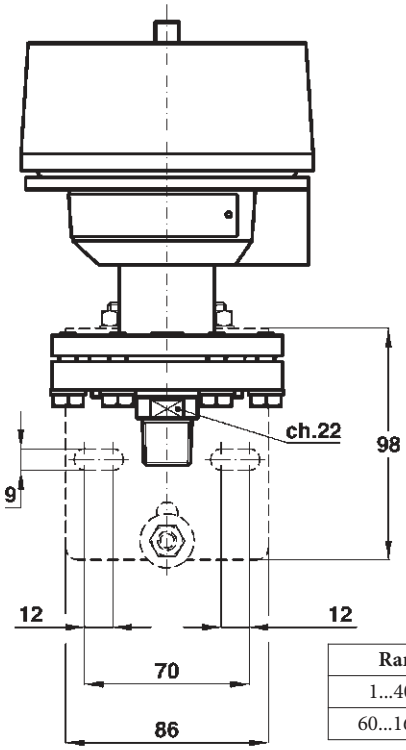

F1
1 - R 1/2-ISO 7/1
2 - R 3/4-ISO 7/1
3 - 1/2-14 NPT
4 - 3/4-14 NPT
A - M20 x 1,5

F
41M - G 1/2 B
43M - 1/2-14 NPT
53M - 3/4-14 NPT
97M - M20 x 1,5

Range			
1...40 bar	98	23	160
60...160 bar	110	41	178

dimensions : *inches* (mm)

Set- point adjustment

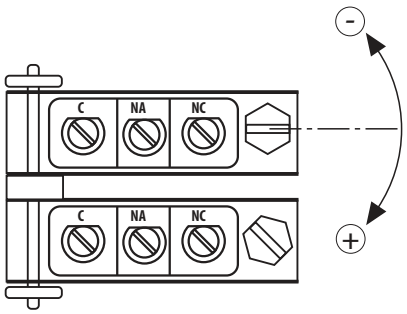

MICROSWITCHES
ohmic load

Single / Double	Type	250 Vac	125 Vac	24 Vdc
C / D	std.	**15A**	**15A**	0,1A
G / H	SPLASH	**15A**	**15A**	0,1A
I / L	goldplated		**1A**	0,1A
M / P	inert gas filled	**15A**	**15A**	0,1A
N / R	goldplated and inert gas filled		**1A**	0,1A
E	adjustable dead band	**20A**	**20A**	0,1A
S / T	SPLASH VDC	15A	15A	**2A**
U / V	inert gas filled VDC	15A	15A	**2A**

OPTIONS

F03 - Special overpressure stop	**E30** - Nace MR 01.03 version (1)
M26 - PTFE diaphragm	**M23** - Monel diaphragm
S16 - Wall mounting bracket	**M22** - Hastelloy C diaphragm
T01 - Tropicalization	**M29** - Tantalum diaphragm
P02 - Oxygen service	**S31** - 2"stake's mounting bracket

(1) Monel or Hastelloy C diaphragm.

"HOW TO ORDER" SEQUENCE

Section	Model	Set-point Adjustment	Microswitch	Electrical connection	Process connection	ATEX	Options
3	40		C, D, G, H	1	41M	2D2	F03...S31
			I, L, M, P	2	43M		
			N, R, E	3	53M		
			S, T, U, V	4	97M		
				A			

IN ORDER TO IMPROVE THEIR PRODUCTION, MESSRS. NUOVA FIMA RESERVE THE RIGHT TO THEMSELVES TO MAKE ALL THE MODIFICATIONS THAT THEY DEEM INDISPENSABLE AT ANY TIME. UPDATED DATA-SHEETS ARE AVAILABLE ON SITE: www.nuovafima.com

Copyright © Nuova Fima srl. All rights reserved. Any part of this publication should not be reproduced without a written Nuova Fima's srl approval

NUOVA FIMA USA Inc.
www.nuovafima.com - e-mail: infousa@nuovafima.com
4123 Hollister, Suite G - TX 77080 Houston
TEL. +1 713.690.9800 - FAX +1 713.690.9803

NUOVA FIMA srl
www.nuovafima.com - e-mail: info@nuovafima.com
P.O. BOX 58 - VIA C. BATTISTI 59 - 28045 INVORIO (NO) ITALY
TEL. +39 0322 253200 - FAX +39 0322 253232

diaphragm pressure switches
ATEX flameproof enclosure

PED 2014/68/EU

II 2 GD Ex db IIC T6 Ex tb IIIC T85°C

Certificate : 0425 ATEX 2634

These flameproof electrical apparatus comply with European Directive ATEX 2014/34/EU, for group II and category 2 GD. They are suitable for a variety of uses in hazardous zones 1, 2, 21 and 22 in which the use of flameproof instrument is required. The sensing element is a metallic diaphragm and acts directly on the microswitch through a self-centering pivot. The simplicity of the design, without levers, cams or similar mechanisms, gives the unit an exceptionally long working life.

3.42 - Standard Model

Type of ignition protection as per EN 60079-0 and EN 60079-1: **Ex db IIc T6 Ex tb IIIC T85°C**.

Protection: IP 65 as per EN 60529.

Ranges: 0...1 bar/0...160 bar; -1...0 bar.

Electrical specifications: N. 1...2 SPDT microswitches, or N.1 with adjustable differential (see microswitches table).

Differential: fixed, or adjustable 10%...50% of setting range (see microswitches table).

Repeatability: ≤ 1% of the full setting value.

Set-point adjustment: internal, micrometric adjustable.

Earth contacts: N. 1 internal, N. 1 external.

Process fluid temperature: *-4...+140°F* (-20...+60 °C).

Ambient temperature: *-4...+149°F (*-20...+65 °C).

Thermal drift: ≤ *0,027% / °F* (≤ 0,05% / °C).

Process connection: AISI 316 st.st.

Elastic element: AISI 316 st.st. diaphragm for pressure ranges ≤ 2,5 bar; carbon steel diaphragm covered with AISI 316 st.st. for pressure ranges > 2,5 bar. Diaphragm PTFE gasket.

Case: aluminium, blue polyurethane painted.

Cover: aluminium, beige polyurethane painted.

Tag: AISI 304 st.st., etched.

Tell-tale vents: polypropylene.

Set-point ranges	Test pressure	Special overrange (cod. F03)	Differential 1 micro (2)	Differential 2 micro (2)
0,06...1 bar (1)	1,2 bar	10 bar	25 mbar	60 mbar
0,06...1,6 bar (1)	2 bar	10 bar	30 mbar	60 mbar
0,06...2,5 bar (1)	3 bar	10 bar	40 mbar	60 mbar
0,08...4 bar	5 bar	15 bar	50 mbar	80 mbar
0,09...6 bar	8 bar	15 bar	60 mbar	90 mbar
0,15...10 bar	12 bar	20 bar	100 mbar	150 mbar
0,25...16 bar	20 bar	30 bar	160 mbar	250 mbar
0,4...25 bar	30 bar	35 bar	250 mbar	400 mbar
0,6...40 bar	48 bar	60 bar	400 mbar	600 mbar
0,9...60 bar	70 bar	80 bar	600 mbar	900 mbar
6...100 bar	120 bar		4 bar	6 bar
8...160 bar	185 bar		5 bar	8 bar

(1) also available for vacuum and compound
(2) differential and minimum set-point values for microswitches cod. I, L, N, R, S, T, U, V are 300% of those shown in table.

RCS-05/14

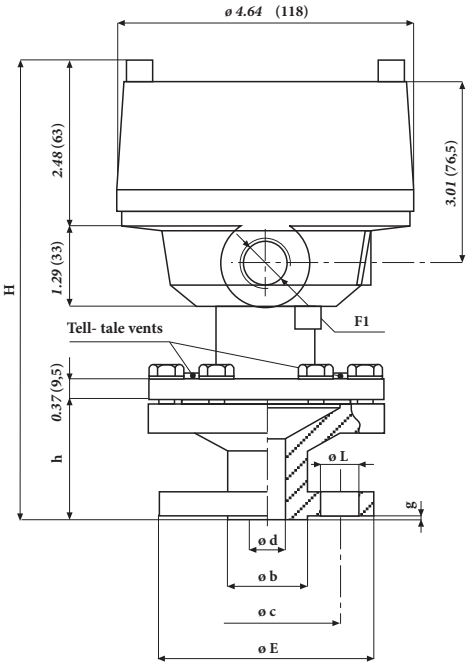

dimensions : *inches* (mm)

UNI - DIN STANDARDS (1)

dimensions : mm

Code	DN(2)	PN-bar	h	H	E	b	d	g	c	L(3)
OO0	15	6	46	188	80	40	15	2	55	11,5
OQ0	15	10...16	50	192	95	45	15	2	65	14
OS0	15	25...40	52	194	95	45	15	2	65	14
QO0	25	6	49	191	100	60	25	2	75	11,5
QQ0	25	10...16	59	201	115	68	25	2	85	14
QS0	25	25...40	59	201	115	68	25	2	85	14

ASME STANDARDS (1)

dimensions : *inches*

Code	DN(2)	Class	h	H	E	b	d			L(3)
4AA	1/2"	150	*1.89*	*7.48*	*3.50*	*1.38*	*0.59*	*0.06*	*2.38*	*0.63*
4BA	1/2"	300	*2.11*	*7.70*	*3.74*	*1.38*	*0.59*	*0.06*	*2.64*	*0.63*
4DA	1/2"	600	*2.36*	*7.95*	*3.74*	*1.38*	*0.59*	*0.25*	*2.64*	*0.63*
6AA	1"	150	*2.01*	*7.60*	*4.25*	*2*	*0.98*	*0.06*	*3.13*	*0.63*
6BA	1"	300	*2.36*	*7.95*	*4.88*	*2*	*0.98*	*0.06*	*3.50*	*0.75*
6DA	1"	600	*2.60*	*8.19*	*4.88*	*2*	*0.98*	*0.25*	*3.50*	*0.75*

1) Finishing: UNI - Ra 12,5 µm max;
DIN - Rz 40...160 µm; ASME - AARH 125...250 µin
2) Available also DN 20,32,40,50 e 1" 1/2 , 2"
3) N°4 threaded or through holes.

Set- point adjustment

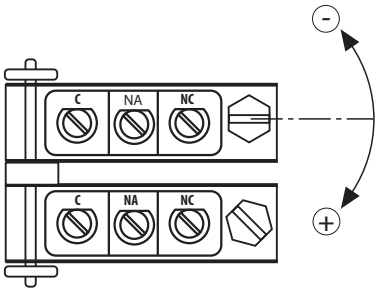

MICROSWITCHES
ohmic load

Single / Double	Type	250 Vac	125 Vac	24 Vdc
C / D	std.	**15A**	**15A**	0,1A
G / H	SPLASH	**15A**	**15A**	0,1A
I / L	goldplated		**1A**	0,1A
M / P	inert gas filled	**15A**	**15A**	0,1A
N / R	goldplated and inert gas filled		**1A**	0,1A
E	adjustable dead band	**20A**	**20A**	0,1A
S / T	SPLASH VDC	15A	15A	**2A**
U / V	inert gas filled VDC	15A	15A	**2A**

F1
1 - R 1/2-ISO 7/1
2 - R 3/4-ISO 7/1
3 - 1/2-14 NPT
4 - 3/4-14 NPT
A - M20 x 1,5

OPTIONS

F03 - Special overpressure stop	E30 - Nace MR 01.03 version (1)
M26 - PTFE diaphragm	M23 - Monel diaphragm
T01 - Tropicalization	M22 - Hastelloy C diaphragm
P02 - Oxygen service	M29 - Tantalum diaphragm

(1) Monel or Hastelloy C diaphragm.

"HOW TO ORDER" SEQUENCE

Section / Model / Set-point Adjustment / Microswitch / Electrical connection / Process connection / ATEX / Options

Section	Model	Set-point Adjustment	Microswitch	Electrical connection	Process connection	ATEX	Options
3	42	C, D, G, H	1	OO0...QS0	2D2	F03...M29	
		I, L, M, P	2	4AA....6AA			
		N, R, E	3				
		S, T, U, V	4				
			A				

IN ORDER TO IMPROVE THEIR PRODUCTION, MESSRS. NUOVA FIMA RESERVE THE RIGHT TO THEMSELVES TO MAKE ALL THE MODIFICATIONS THAT THEY DEEM INDISPENSABLE AT ANY TIME. UPDATED DATA-SHEETS ARE AVAILABLE ON SITE: www.nuovafima.com

Copyright © Nuova Fima srl. All rights reserved. Any part of this publication should not be reproduced without a written Nuova Fima's srl approval

NUOVA FIMA USA Inc.
www.nuovafima.com - e-mail: infousa@nuovafima.com
4123 Hollister, Suite G - TX 77080 Houston
TEL. +1 713.690.9800 - FAX +1 713.690.9803

NUOVA FIMA srl
www.nuovafima.com - e-mail: info@nuovafima.com
P.O. BOX 58 - VIA C. BATTISTI 59 - 28045 INVORIO (NO) ITALY
TEL. +39 0322 253200 - FAX +39 0322 253232

diaphragm pressure switches
ATEX flameproof enclosure

PED 2014/68/EU

II 2 GD Ex db IIC T6 Ex tb IIIC T85°C

Certificate :
0425 ATEX 2634

These flameproof electrical apparatus comply with European Directive ATEX 2014/34/EU, for group II and category 2 GD. They are suitable for a variety of uses in hazardous zones 1, 2, 21 and 22 in which the use of flameproof instrument is required. The sensing element is a metallic diaphragm and acts directly on the microswitch through a self-centering pivot. The simplicity of the design, without levers, cams or similar mechanisms, gives the unit an exceptionally long working life.

3.43 - Standard Model

Type of ignition protection as per EN 60079-0 and EN 60079-1:
Ex db IIc T6 Ex tb IIIC T85°C.
Protection: IP 65 as per EN 60529.
Ranges: 0...1 bar/0...160 bar; -1...0 bar.
Electrical specifications: N. 1...2 SPDT microswitches, or N.1 with adjustable differential (see microswitches table).
Differential: fixed, or adjustable 10%...50% of setting range (see microswitches table).
Repeatability: ≤ 1% of the full setting value.
Set-point adjustment: internal, micrometric adjustable.
Earth contacts: N. 1 internal, N. 1 external.
Process fluid temperature: *-4...+140°F* (-20...+60 °C).
Ambient temperature: *-4...+149°F (*-20...+65 °C).
Thermal drift: ≤ *0,027% / °F* (≤ 0,05% / °C).

Process connection: AISI 316 st.st.
Elastic element: AISI 316 st.st. diaphragm for pressure ranges ≤ 2,5 bar; carbon steel diaphragm covered with AISI 316 st.st. for pressure ranges > 2,5 bar. Diaphragm PTFE gasket.
Case: aluminium, blue polyurethane painted.
Cover: aluminium, beige polyurethane painted.
Tag: AISI 304 st.st., etched.
Tell-tale vents: polypropylene.

Setting ranges	Test pressure	Special overrange (cod. F03)	Differential 1 micro (2)	Differential 2 micro (2)
0,06...1 bar (1)	1,2 bar	10 bar	25 mbar	60 mbar
0,06...1,6 bar (1)	2 bar	10 bar	30 mbar	60 mbar
0,06...2,5 bar (1)	3 bar	10 bar	40 mbar	60 mbar
0,08...4 bar	5 bar	15 bar	50 mbar	80 mbar
0,09...6 bar	8 bar	15 bar	60 mbar	90 mbar
0,15...10 bar	12 bar	20 bar	100 mbar	150 mbar
0,25...16 bar	20 bar	30 bar	160 mbar	250 mbar
0,4...25 bar	30 bar	35 bar	250 mbar	400 mbar
0,6...40 bar	48 bar	60 bar	400 mbar	600 mbar
0,9...60 bar	70 bar	80 bar	600 mbar	900 mbar
6...100 bar	120 bar		4 bar	6 bar
8...160 bar	185 bar		5 bar	8 bar

(1) also available for vacuum and compound
(2) differential and minimum set-point values for microswitches cod. I, L, N, R, S, T, U, V are 300% of those shown in table.

RG - 05/14

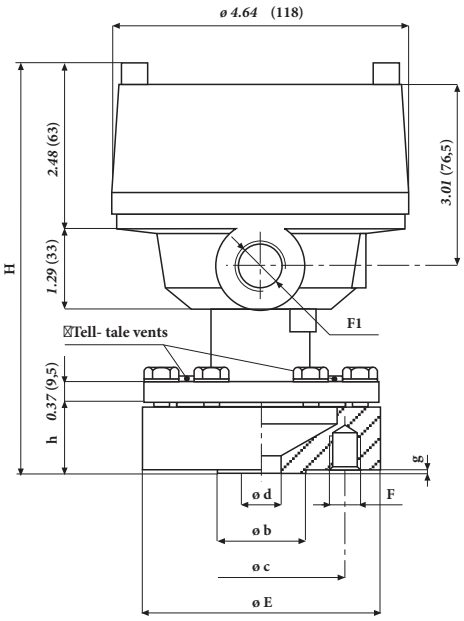

dimensions : *inches* (mm)

UNI - DIN STANDARDS (1)

dimensions : mm

Code	DN(2)	PN-bar	h	H	E	b	d	g	c	F	N (3)
SO0	40	6	27	169	130	80	40	3	100	M12	4
SQ0	40	10...16	27	169	150	88	40	3	110	M16	4
SS0	40	25...40	27	169	150	88	40	3	110	M16	4
TO0	50	6	27	169	140	90	50	3	110	M12	4
TQ0	50	10...16	27	169	165	102	50	3	125	M16	4
TS0	50	25...40	27	169	165	102	50	3	125	M16	4

ASME STANDARDS (1)

dimensions : *inches*

Code	DN(2)	Class	h	H	E	b	d	g	c	F	N(3)
AAA	1" 1/2	150	*1.06*	*6.65*	*5*	*2.87*	*1.57*	*0.06*	*3.87*	1/2" 13UNC	4
ABA	1" 1/2	300	*1.06*	*6.65*	*6.12*	*2.87*	*1.57*	*0.06*	*4.50*	3/4" 10UNC	4
ADA	1" 1/2	600	*1.91*	*7.50*	*6.12*	*2.87*	*1.57*	*0.25*	*4.50*	3/4" 10UNC	4
BAA	2"	150	*1.06*	*6.65*	*6.12*	*3.63*	*1.97*	*0.06*	*4.75*	5/8" 11UNC	4
BBA	2"	300	*1.06*	*6.65*	*6.50*	*3.63*	*1.97*	*0.06*	*5*	5/8" 11UNC	8
BDA	2"	600	*1.91*	*7.50*	*6.50*	*3.63*	*1.97*	*0.25*	*5*	5/8" 11UNC	8

1) Finishing: UNI - Ra 12,5 µm max; DIN - Rz 40...160 µm; ASME - AARH 125...250 µin
2) Also aavailable DN 15,20,25 e 1/2 1".
3) N° of threaded or through holes.

Set- point adjustment

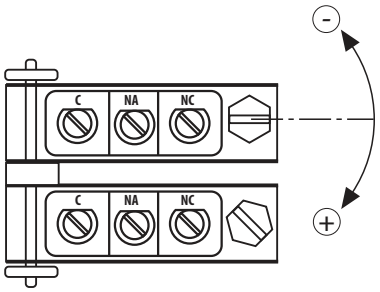

MICROSWITCHES

ohmic load

Single / Double	Type	250 Vac	125 Vac	24 Vdc
C / D	std.	**15A**	**15A**	0,1A
G / H	SPLASH	**15A**	**15A**	0,1A
I / L	goldplated		**1A**	0,1A
M / P	inert gas filled	**15A**	**15A**	0,1A
N / R	goldplated and inert gas filled		**1A**	0,1A
E	adjustable dead band	**20A**	**20A**	0,1A
S / T	SPLASH VDC	15A	15A	**2A**
U / V	inert gas filled VDC	15A	15A	**2A**

F1
1 - R 1/2-ISO 7/1
2 - R 3/4-ISO 7/1
3 - 1/2-14 NPT
4 - 3/4-14 NPT
A - M20 x 1,5

OPTIONS

F03 - Special overpressure stop	E30 - Nace MR 01.03 version (1)
M26 - PTFE diaphragm	M23 - Monel diaphragm
T01 - Tropicalization	M22 - Hastelloy C diaphragm
P02 - Oxygen service	M29 - Tantalum diaphragm

(1) Monel or Hastelloy C diaphragm.

"HOW TO ORDER" SEQUENCE

Section / Model / Set-point Adjustment / Microswitch / Electrical connection / Process connection / ATEX / Options

Section	Model	Set-point Adjustment	Microswitch	Electrical connection	Process connection	ATEX	Options
3	43	C, D, G, H	1	SQ0...TS0	2D2	F03...M29	
		I, L, M, P	2	AAA....BDA			
		N, R, E	3				
		S, T, U, V	4				
			A				

IN ORDER TO IMPROVE THEIR PRODUCTION, MESSRS. NUOVA FIMA RESERVE THE RIGHT TO THEMSELVES TO MAKE ALL THE MODIFICATIONS THAT THEY DEEM INDISPENSABLE AT ANY TIME. UPDATED DATA-SHEETS ARE AVAILABLE ON SITE: www.nuovafima.com

Copyright © Nuova Fima srl. All rights reserved. Any part of this publication should not be reproduced without a written Nuova Fima's srl approval

NUOVA FIMA USA Inc.
www.nuovafima.com - e-mail: infousa@nuovafima.com
4123 Hollister, Suite G - TX 77080 Houston
TEL. +1 713.690.9800 - FAX +1 713.690.9803

NUOVA FIMA srl
www.nuovafima.com - e-mail: info@nuovafima.com
P.O. BOX 58 - VIA C. BATTISTI 59 - 28045 INVORIO (NO) ITALY
TEL. +39 0322 253200 - FAX +39 0322 253232

diaphragm pressure switches
ATEX flameproof enclosure

PED 2014/68/EU

II 2 GD Ex db IIC T6 Ex tb IIIC T85°C

Certificate :
0425 ATEX 2634

These flameproof electrical apparatus comply with European Directive ATEX 2014/34/EU, for group II and category 2 GD. They are suitable for a variety of uses in hazardous zones 1, 2, 21 and 22 in which the use of flameproof instrument is required. The sensing element is a metallic diaphragm and acts directly on the microswitch through a self-centering pivot. The simplicity of the design, without levers, cams or similar mechanisms, gives the unit an exceptionally long working life.

3.45 - Standard Model

Type of ignition protection as per EN 60079-0 and EN 60079-1:
Ex db IIc T6 Ex tb IIIC T85°C.
Protection: IP 65 as per EN 60529.
Ranges: 0...40 mbar/0...600mbar; -40...0 mbar/-600...0 mbar.
Electrical specifications: N. 1...2 SPDT microswitches (see microswitches table).
Differential: fixed.
Repeatability: ≤ 1% of the full setting value.
Set-point adjustment: internal, micrometric adjustable.
Earth contacts: N. 1 internal, N. 1 external.
Process fluid temperature: *-4...+140°F* (-20...+60 °C).

Ambient temperature: *-4...+149°F* (-20...+65 °C).
Thermal drift: ≤ *0,027% / °F* (≤ 0,05% / °C).
Process connection: AISI 316L st.st.
Elastic element: AISI 316 Ti st.st. diaphragm. PTFE gasket.
Case: aluminium, blue polyurethane painted.
Cover: aluminium, beige polyurethane painted.
Tag: AISI 304 st.st., etched.
Tell-tale vents: polypropylene.

Setting ranges (1)	Test pressure	Differential 1 micro (2)	Differential 2 micro (2)
5...40 mbar	0,5 bar	4 mbar	5 mbar
5...60 mbar	0,5 bar	4 mbar	5 mbar
6...100 mbar	0,5 bar	4 mbar	6 mbar
9...160 mbar	0,5 bar	6 mbar	9 mbar
9...250 mbar	1 bar	6 mbar	9 mbar
15...400 mbar	1 bar	10 mbar	15 mbar
18...600 mbar	1 bar	12 mbar	18 mbar

(1) also available for vacuum and compound
(2) differential and minimum set-point values for microswitches cod. I, L, N, R, S, T, U, V are 300% of those shown in table.

RCS - 05/14

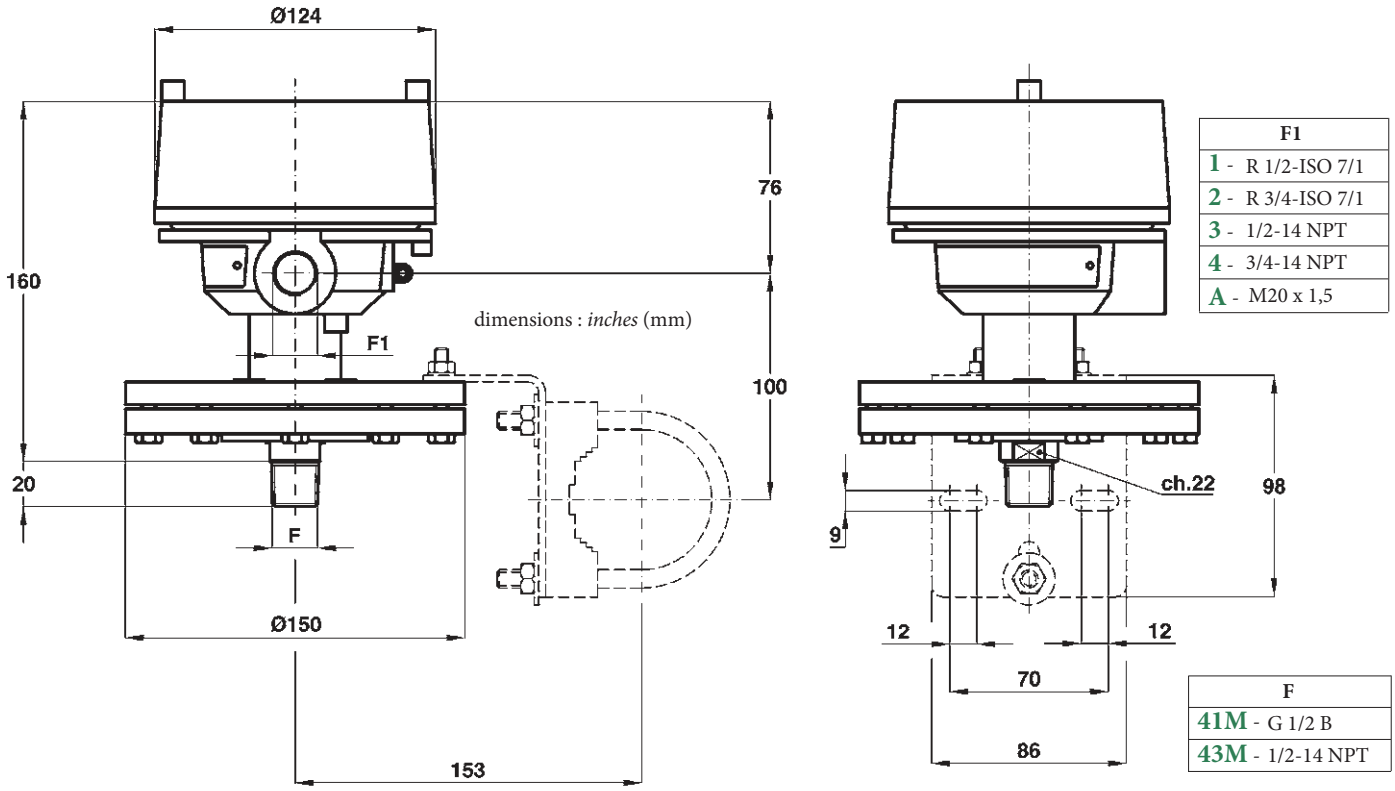

F1
1 - R 1/2-ISO 7/1
2 - R 3/4-ISO 7/1
3 - 1/2-14 NPT
4 - 3/4-14 NPT
A - M20 x 1,5

F
41M - G 1/2 B
43M - 1/2-14 NPT

Set- point adjustment

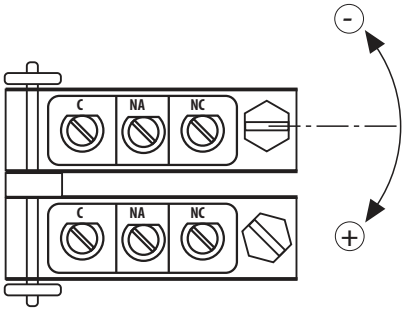

MICROSWITCHES
ohmic load

Simple / Doble	Type	250 Vac	125 Vac	24 Vdc
C / D	std.	**15A**	**15A**	0,1A
G / H	SPLASH	**15A**	**15A**	0,1A
I / L	goldplated		**1A**	0,1A
M / P	inert gas filled	**15A**	**15A**	0,1A
N / R	goldplated and inert gas filled		**1A**	0,1A
S / T	SPLASH VDC	15A	15A	**2A**
U / V	inert gas filled VDC	15A	15A	**2A**

OPTIONS

M26 - PTFE diaphragm	M29 - Tantalum diaphragm
S16 - Wall mounting bracket	S31 - 2"stake's mounting bracket
T01 - Tropicalization	

(1) Monel or Hastelloy C diaphragm.

"HOW TO ORDER" SEQUENCE

Section / Model / Set-point Adjustment / Microswitch/ Electrical connection / Process connection / ATEX / Options

Section	Model	Set-point Adjustment	Microswitch	Electrical connection	Process connection	ATEX	Options
3	45		C, D, G, H	1	41M	2D2	M26...S31
			I, L, M, P	2	43M		
			N, R, E	3	53M		
			S, T, U, V	4	97M		
				A			

Copyright © Nuova Fima srl. All rights reserved. Any part of this publication should not be reproduced without a written Nuova Fima's srl approval

IN ORDER TO IMPROVE THEIR PRODUCTION, MESSRS. NUOVA FIMA RESERVE THE RIGHT TO THEMSELVES TO MAKE ALL THE MODIFICATIONS THAT THEY DEEM INDISPENSABLE AT ANY TIME. UPDATED DATA-SHEETS ARE AVAILABLE ON SITE: www.nuovafima.com

NUOVA FIMA USA Inc.
www.nuovafima.com - e-mail: infousa@nuovafima.com
4123 Hollister, Suite G - TX 77080 Houston
TEL. +1 713.690.9800 - FAX +1 713.690.9803

NUOVA FIMA srl
www.nuovafima.com - e-mail: info@nuovafima.com
P.O. BOX 58 - VIA C. BATTISTI 59 - 28045 INVORIO (NO) ITALY
TEL. +39 0322 253200 - FAX +39 0322 253232

differential pressure switches
ATEX flameproof enclosure

PED 2014/68/EU

II 2 GD Ex db IIC T6 Ex tb IIIC T85°C

Certificate : v

These flameproof electrical apparatus comply with European Directive ATEX 2014/34/EU, for group II and category 2 GD. They are suitable for a variety of uses in hazardous zones 1, 2, 21 and 22 in which the use of flameproof instrument is required. The sensing element is a metallic diaphragm with 2 metallic bellows and acts directly on the microswitch through a self-centering pivot. The simplicity of the design, without levers, cams or similar mechanisms, gives the unit an exceptionally long working life.

3.48 - Standard Model

Type of ignition protection as per EN 60079-0 and EN 60079-1:
Ex db IIc T6 Ex tb IIIC T85°C.
Protection: IP 65 as per IEC 529.
Certificate: no. 04 ATEX 027, issued by CESI - Milano, notified body no. 0722.
Ranges: 0...1 bar/0...10 bar.
Electrical specifications: N. 1...2 SPDT microswitches, or N. 1 with adjustable differential (see microswitches table).
Differential: fixed, or adjustable 10%...50% of setting range (see microswitches table).
Repeatability: ≤ 1% of the full setting value.
Set-point adjustment: internal, micrometric adjustable.
Earth contacts: N. 1 internal, N. 1 external.
Process fluid temperature: *-4...+140°F* (-20...+60 °C).
Ambient temperature: *-4...+149°F* (-20...+65 °C).
Thermal drift: ≤ *0,027% / °F* (≤ 0,05% / °C).
Process connection: AISI 316 st.st.
Elastic element: AISI 316 st.st. diaphragm with N. 2 AISI 321 st.st. bellows; PTFE gasket.
Case: aluminium, blue polyurethane painted.
Cover: aluminium, beige polyurethane painted.
Tag: AISI 304 st.st., silk-screen painted.
Tell-tale vents: polypropylene.
Flushing plugs: AISI 316 st.st.
Weight: *9.25 lbs* (4,2 kg).

Setting ranges	One side static pressure	Both side static pressure	Differential 1 micro (1)	Differential 2 micro (1)
0,1...1 bar	10 bar	25 bar	60 mbar	80 mbar
0,1...2,5 bar	15 bar	25 bar	60 mbar	80 mbar
0,2...4 bar	15 bar	25 bar	70 mbar	100 mbar
0,2...6 bar	15 bar	25 bar	100 mbar	150 mbar
0,2...10 bar	15 bar	25 bar	120 mbar	170 mbar

1) differential and minimum set-point values for microswitches cod. I, L, N, R, S, T, U, V are 300% of those shown in table.

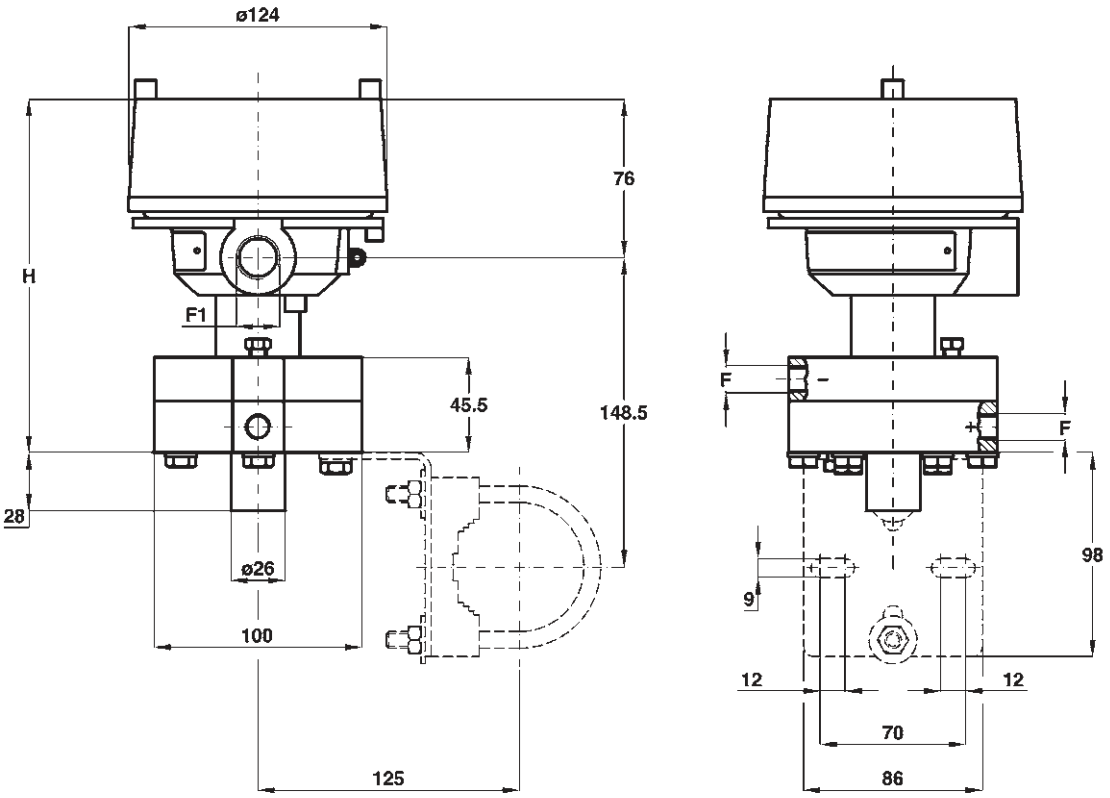

F1
1 - R 1/2-ISO 7/1
2 - R 3/4-ISO 7/1
3 - 1/2-14 NPT
4 - 3/4-14 NPT
A - M20 x 1,5

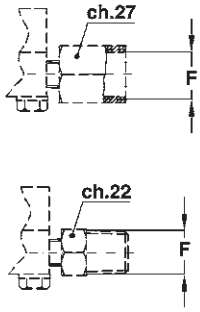

F
21F - G 1/4
23F - 1/4-18 NPT
43F - 1/2-14 NPT
43M - 1/2-14 NPT M

dimensions : *inches* (mm)

Set- point adjustment

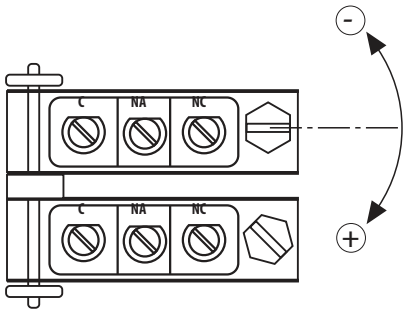

MICROSWITCHES
ohmic load

Single / Double	Type	250 Vac	125 Vac	24 Vdc
C / D	std.	**15A**	**15A**	0,1A
G / H	SPLASH	**15A**	**15A**	0,1A
I / L	goldplated		**1A**	0,1A
M / P	inert gas filled	**15A**	**15A**	0,1A
N / R	goldplated and inert gas filled		**1A**	0,1A
E	adjustable dead band	**20A**	**20A**	0,1A
S / T	SPLASH VDC	15A	15A	**2A**
U / V	inert gas filled VDC	15A	15A	**2A**

"HOW TO ORDER" SEQUENCE

Section / Model / Set-point Adjustment / Microswitch / Electrical connection / Process connection / ATEX / Options

3	48	C, D, G, H	1	21F	2D2
		I, L, M, P	2	23F	
		N, R, E	3	43F	
		S, T, U, V	4	43M	
			A		

Copyright © Nuova Fima srl. All rights reserved. Any part of this publication should not be reproduced without a written Nuova Fima's srl approval

NUOVA FIMA USA Inc.
www.nuovafima.com - e-mail: infousa@nuovafima.com
4123 Hollister, Suite G - TX 77080 Houston
TEL. +1 713.690.9800 - FAX +1 713.690.9803

NUOVA FIMA srl
www.nuovafima.com - e-mail: info@nuovafima.com
P.O. BOX 58 - VIA C. BATTISTI 59 - 28045 INVORIO (NO) ITALY
TEL. +39 0322 253200 - FAX +39 0322 253232

IN ORDER TO IMPROVE THEIR PRODUCTION, MESSRS. NUOVA FIMA RESERVE THE RIGHT TO THEMSELVES TO MAKE ALL THE MODIFICATIONS THAT THEY DEEM INDISPENSABLE AT ANY TIME. UPDATED DATA-SHEETS ARE AVAILABLE ON SITE: www.nuovafima.com

RG - 05/14

differential pressure switches
ATEX flameproof enclosure

PED 2014/68/EU

II 2 GD Ex db IIC T6 Ex tb IIIC T85°C

Certificate :
0425 ATEX 2634

These flameproof electrical apparatus comply with European Directive ATEX 2014/34/EU, for group II and category 2 GD. They are suitable for a variety of uses in hazardous zones 1, 2, 21 and 22 in which the use of flameproof instrument is required. The sensing element is a metallic diaphragm with 2 metallic bellows and acts directly on the microswitch through a self-centering pivot. The simplicity of the design, without levers, cams or similar mechanisms, gives the unit an exceptionally long working life.

3.49 - Standard Model

Type of ignition protection as per EN 60079-0 and EN 60079-1:
Ex db IIc T6 Ex tb IIIC T85°C.
Protection: IP 65 as per IEC 529.
Ranges: 0...250 mbar/0...600 mbar.
Electrical specifications: N. 1...2 SPDT microswitches, or N. 1 with adjustable differential. (see microswitches table)
Differential: fixed.
Repeatability: ≤ 1% of the full setting value.
Set-point adjustment: internal, micrometric adjustable.
Earth contacts: N. 1 internal, N. 1 external.
Process fluid temperature: *-4...+140°F* (-20...+60 °C).
Ambient temperature: *-4...+149°F (*-20...+65 °C).

Thermal drift: ≤ *0,027% / °F* (≤ 0,05% / °C).
Process connection: AISI 316 st.st.
Elastic element: AISI 316 st.st. diaphragm with N. 2 AISI 321 st.st. bellows; PTFE gasket.
Case: aluminium, blue polyurethane painted.
Cover: aluminium, beige polyurethane painted.
Tag: AISI 304 st.st., silk-screen painted.
Tell-tale vents: polypropylene.
Flushing plugs: AISI 316 st.st.
Weight: *14.77 lbs* (6,7 kg).

Setting ranges	One side static pressure	Both side static pressure	Differential 1 micro (1)	Differential 2 micro (1)
20...250 mbar	2,5 bar	4 bar	10 mbar	15 mbar
25...400 mbar	4 bar	4 bar	16 mbar	20 mbar
35...600 mbar	4 bar	4 bar	20 mbar	30 mbar

(1) differential and minimum set-point values for microswitches cod. I, L, N, R, S, T, U, V are 300% of those shown in table.

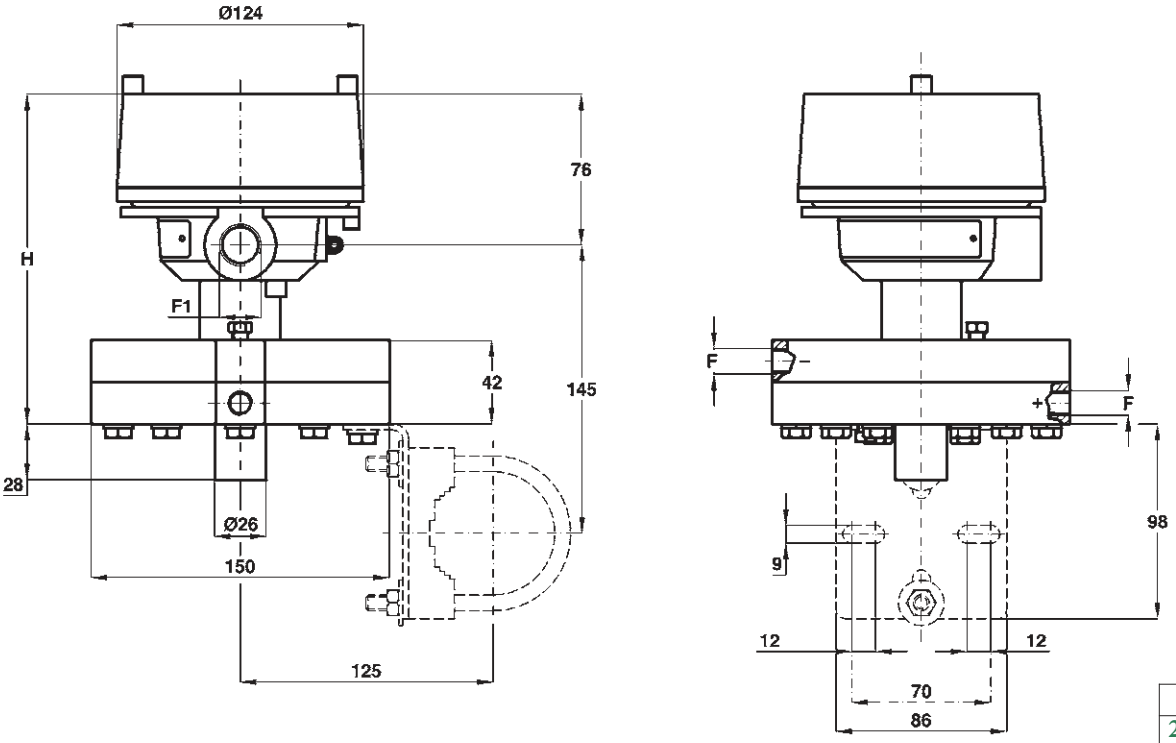

F1
1 - R 1/2-ISO 7/1
2 - R 3/4-ISO 7/1
3 - 1/2-14 NPT
4 - 3/4-14 NPT
A - M20 x 1,5

F
21F - G 1/4
23F - 1/4-18 NPT
43F - 1/2-14 NPT
43M - 1/2-14 NPT M

dimensions : *inches* (mm)

Set- point adjustment

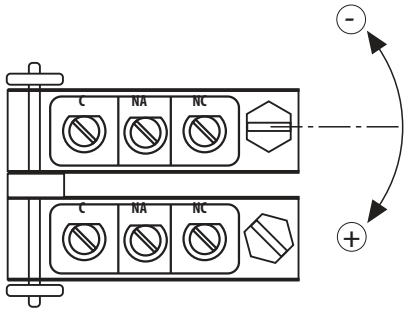

MICROSWITCHES
ohmic load

Single / Double	Type	250 Vac	125 Vac	24 Vdc
C / D	std.	15A	15A	0,1A
G / H	SPLASH	15A	15A	0,1A
I / L	goldplated		1A	0,1A
M / P	inert gas filled	15A	15A	0,1A
N / R	goldplated and inert gas filled		1A	0,1A
S / T	SPLASH VDC	15A	15A	2A
U / V	inert gas filled VDC	15A	15A	2A

"HOW TO ORDER" SEQUENCE

Section	Model	Set-point Adjustment	Microswitch	Electrical connection	Process connection	ATEX	Options
3	49		C, D, G, H	1	21F	2D2	
			I, L, M, P	2	23F		
			N, R	3	43F		
			S, T, U, V	4	43M		
				A			

RCS - 05/14
IN ORDER TO IMPROVE THEIR PRODUCTION, MESSRS. NUOVA FIMA RESERVE THE RIGHT TO THEMSELVES TO MAKE ALL THE MODIFICATIONS THAT THEY DEEM INDISPENSABLE AT ANY TIME. UPDATED DATA-SHEETS ARE AVAILABLE ON SITE: www.nuovafima.com

Copyright © Nuova Fima srl. All rights reserved. Any part of this publication should not be reproduced without written Nuova Fima's approval.
Все права защищены. Любая часть этой публикации не должна быть воспроизведена без разрешения компании Nuova Fima's srl.

NUOVA FIMA srl
www.nuovafima.com - e-mail: info@nuovafima.com
P.O. BOX 58 - VIA C. BATTISTI 59 - 28045 INVORIO (NO) ITALY
TEL. +39 0322 253200 - FAX +39 0322 253232

NUOVA FIMA srl
www.nuovafima.com - e-mail: info@nuovafima.com
P.O. BOX 58 - VIA C. BATTISTI 59 - 28045 INVORIO (NO) ITALY
TEL. +39 0322 253200 - FAX +39 0322 253232

NUOVA FIMA S.r.l.
P.O. BOX 58 Via Cesare Battisti, 59
28045 Invorio (NO) Italy
Tel. +39 0322.253200
Fax +39 0322.253232
info@nuovafima.com

www.nuovafima.com

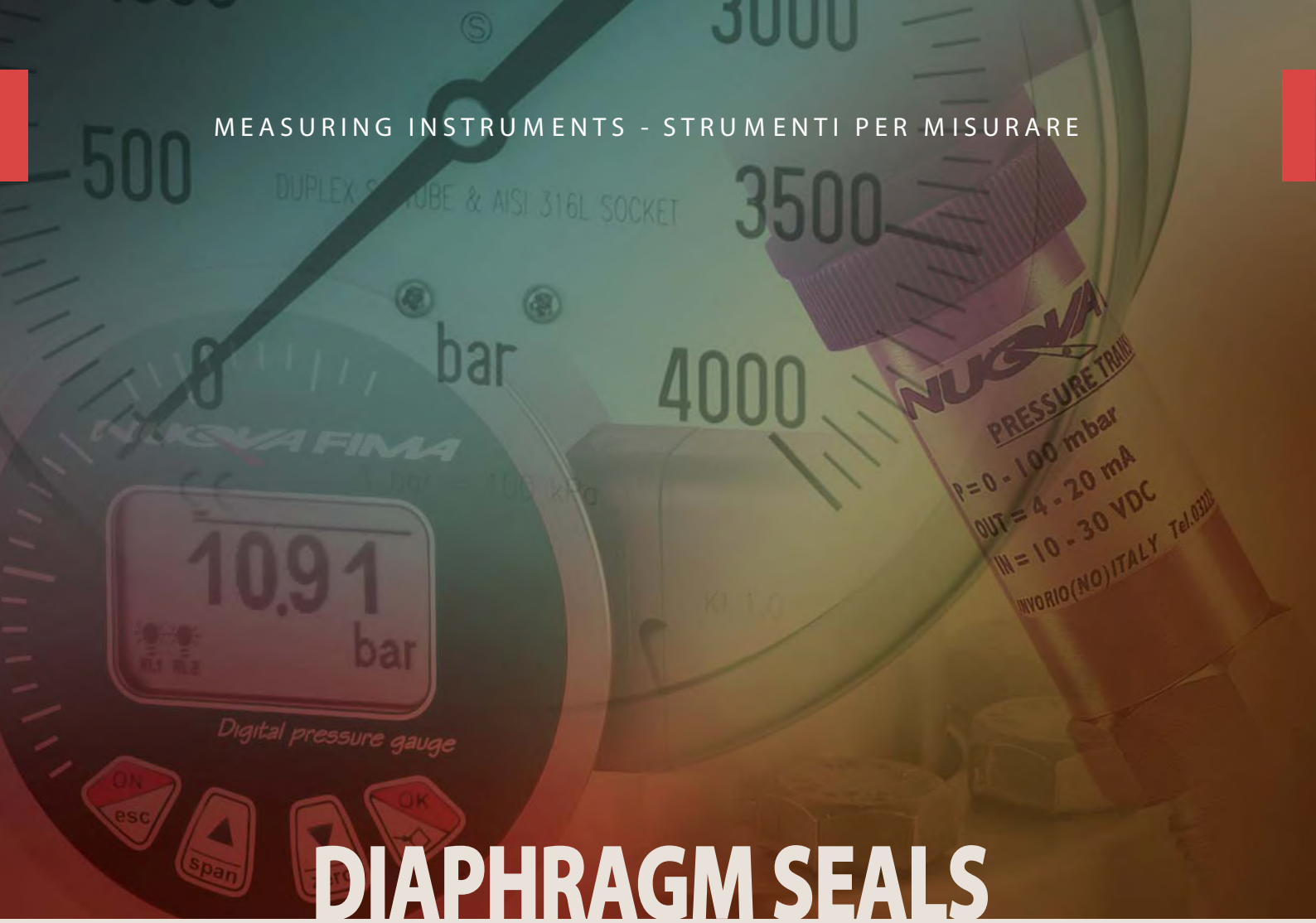

MEASURING INSTRUMENTS - STRUMENTI PER MISURARE

DIAPHRAGM SEALS

NUOVA FIMA

introduction to diaphragm seals

The diaphragm seal is designed to measure the process fluid pressure when the process fluid temperature is non-compatible to the instrument sensing element; when the process fluid may corrode the inner parts of the measuring instrument in contact with the fluid; when the fluid is highly viscous or it contains solid suspensions; when it solidifies at temperature changes.
It is also used for long-distance pressure fluid transmission and measurement allowing to isolate dangerous fluids from the operating areas. It can be directly connected to the indicating instrument or through a capillary.

OPERATING PRINCIPLE

The diaphragm seal operating principle is based on the fluids non-compressibility (see drawing at right).
The separation from the process fluid is obtained from an elastic diaphragm sealed to the diaphragm seal body. The inner chamber between the diaphragm and the Bourdon tube is at first evacuated than filled with properly degased fill-fluid. At this point the system is able to transmit the mechanical stress produced by the process fluid on the diaphragm to the Bourdon tube.
Any air bubble in the circuit must be avoided as it could affect the right system operation.

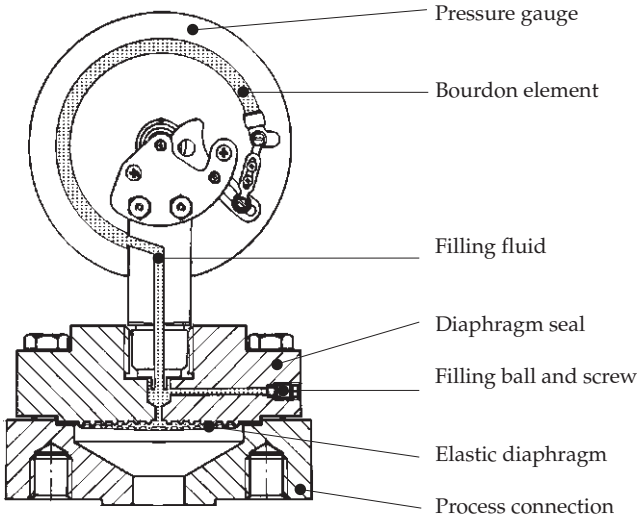

RECOMMENDATIONS

The diaphragm and the body are in contact with the process fluid, therefore they must withstand the temperature and the possible fluid chemical aggression. A guide to the choice of the materials to use depending on the process medium is available under section "CORROSION/MATERIALS".

The filling fluid must be selected depending on the pressure fluid nature and temperature as well since any diaphragm fail may contaminate the process fluid and damage the whole process plant.
A guide for a filling-fluid selection is available under section "FILLING FLUID".

FUNCTIONAL CHARACTERISTICS

Accuracy: at 20 C ±0,5...1%, depending on the diaphragm seal type. This accuracy value must be added to the pressure gauge accuracy.

Process fluid temperature: minimum -45 C, maximum 340 C, depending on the filling fluid, on the diaphragm material and on the process connection.
For temperature higher than the indicated limits please contact the Technical Service Department.

TEMPERATURE INFLUENCE

The complete seal system composed by the diaphragm seal (with or without capillary) and the measuring instrument, is filled with a fixed amount of liquid at a fixed room temperature (generally +20 C ±2 C), called temperature of reference. Any ambient or fluid process temperature change produces a proportional variation of the filling fluid volume causing an inner pressure change that makes a zero off at the indicating instrument. In order to minimize such an error it is necessary to compensate the volume modified by temperature variations.

Diaphragm of small diameter can compensate only little volume changes (see Fig.1). It is recommended to use, in line with process requirements, diaphragm seals with large size diameter. In order to prevent the effects of temperature conduction between the diaphragm seal and the instrument, when the process temperature exceeds 100 C, it is required to fit the instrument with:

- Cooling element
- Capillary mounting

COOLING TOWER

The purpose of the cooling element is to protect the instrument from high temperatures. It reduces the filling fluid temperature inside the instrument to appproximately the room temperature. The cooling element is recommended for instruments direct mounting when the process temperature is exceeding +100 C but is not higher than +250 C.

When a diaphragm seal provided with cooling element is installed on an insulated pipe, it is fundamental that the insulating coat is not covering the element radiant surface in order to assure the system proper working.

REMOTE MOUNTING (with capillary)

The capillary allows the instrument reading when it is far from the process connection. The capillary avoids the fluid process temperature effect on the instrument accuracy.

A 500mm capillary is generally long enough to reduce the indicating instrument temperature to the ambient temperature.

The capillary length must be as short as possible and it should not exceed 6mt because any ambient temperature variation could affect the instrument accuracy and response time (see fig.2).

The remote mounting requires instruments for wall or panel mounting.

If the level difference is known, it must be indicated in order. If not a field adjustment of the micromatic pointer in order to compensate the effect of extreme temperature varation, will be necessary.

Tab. 1 - FILLING LIQUIDS

Liquid type	Limits of process temperature
Silicone oil type "A"	-45 ... +150 C
Silicone oil type "B"	-20 ... +250 C
Silicone oil type "C"	+20 ... +340 C
"Fluorolube"	-60 ... +150 C
Food oil	-20 ... + 200 C

Glycerine or silicone should not be used with highly oxidizing agents such as oxygen, chlorine, nitric acid or hydrogen peroxide, because of spontaneous chemical reaction, inflammability or explosion. The use of fluorinates fluid is recommended in these cases.

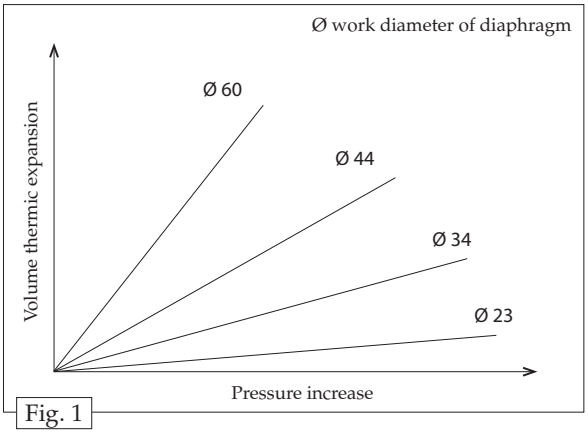

Fig. 1

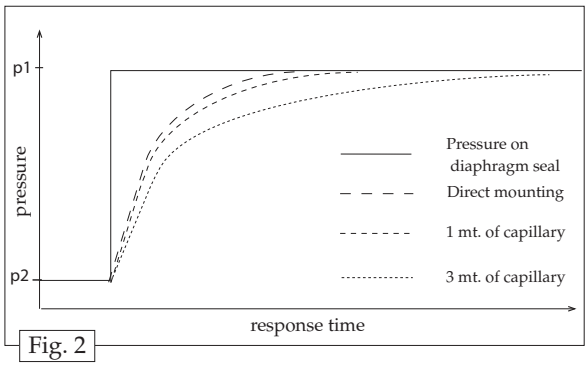

Fig. 2

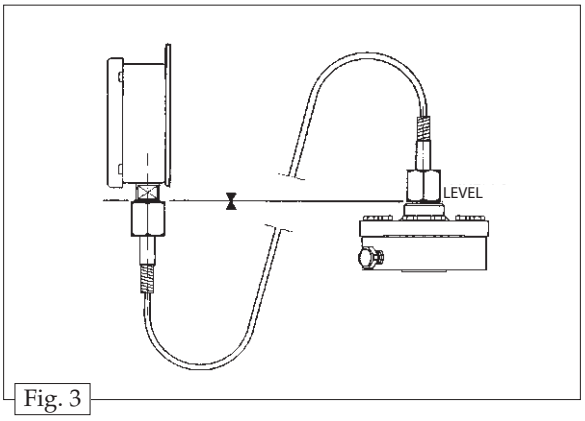

Fig. 3

Tab.2 - DIAPHRAGM SEAL CHOICE

An improper use of the instrument may be dangerous to the diaphragm seal, may cause failure and potential injury to the staff and plant.

Caution: all diaphragm seals must be chosen considering the process fluid and the working conditions in order to prevent inaccurate installations.

For material choice please see recommendations quoted on sheet 5...8.

For process fluids not listed in our guide (the material's life depends on temperature and process fluid concentration as well as for other working conditions) please contact our Technical Department.

In case of uncomplete knowledge of the process fluid behaviour, it is suggested to install the diaphragm seal with a solid front pressure gauge.

In case of tube failure this instrument prevents that dangerous process fluid may hit the workers.

Type MGS9	ø diaphragm (inches - mm)	Facing diaphragm	Welded diaphragm	Thread connection	Flanged connection
1B0	73,5		F	F	
1BS	44			F	
1A0-1AS	44			F	
111	38		F	F	
6W	63		F	F	F
MINI/A	34		F	F	
MINI/B	57		F	F	
2B	63		F	F	
SA	23,5 ... 44	F	F	F	
AL	34 ... 63	F	F		F
R	38	F	F		F
367	23,5	F	F	F	
3A	44				F
3B	73,5		F		F
6	73,5		F		F
5	38...63	F	F		F
4	34...57		F [1]		F
WAF	50...65	F	F		F
P	34...57			F	

[1] Not welded when PTFE coated

DIAPHRAGM SEAL INSTALLATION

The whole system (the pressure gauges with their diaphragm seal) must be kept packaged until installation time in order to protect all the components. Particular care must be taken to prevent damages to the diaphragm during installation of the system on the process. Scratches on the diaphragm surface are the starting point for chemical corrosion action while crush of concentric waves of the diaphragm surface may compromise the system operation.

The capillary and its welded joints to the body must not be bended or twisted. Capillary must not be used as handle for transportation of the system. Bends or extreme bending radius of capillary may cause throttling of the inner hole, may increase the response time or cause capillary breaking compromising the regular instrument operation. The capillary may bend with a minimum of 150mm. bending radius.

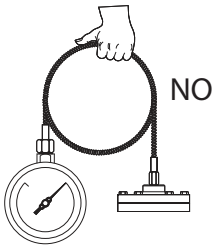

Extreme care must be taken to the sealing gasket mounting between diaphragm seal and process side to cover the diaphragm preventing damages or process fluid leakage.

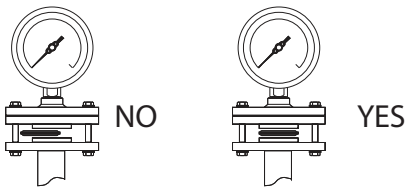

On models with threaded process connection, the mounting must be made through the key flat of the diaphragm seal body and not through the pressure range key flat: this may cause disassemble of the gauge/diaphragm system with eventually leakage of filling fluid.

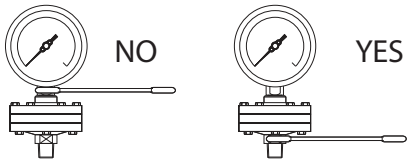

DIAPHRAGM SEAL FASTENING

All diaphragm seals are coupled and fastened to the instruments (except 63mm.) through a label seal. The tampering of the label seal or of the diaphragm seal/instrument coupling compromises their operation and warranty.

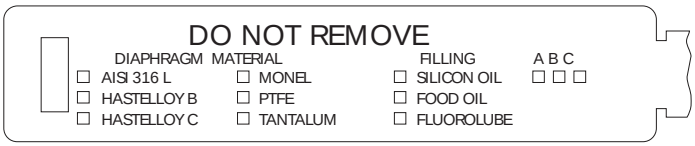

USE OF THE DIAPHRAGM SEAL

The working temperature must not exceed the limit of the material in use.

Working pressure: the maximum working pressure must be 75 % of the range of the instrument coupled with the diaphragm seal. For flanged diaphragm seal the maximum working pressure must also be within the flange rating pressure. The maximum admitted pressure on the diaphragm seal decreases when the temperature increases. To this subject please see table 5 where the connection between pressure/temperature for flange made with different materials are listed.

Temperature: the working temperature must be that of the instrument calibration and must be compatible with the chosen materials. For temperature exceeding 100 C diaphragm seals with capillary or with cooling system are recommended.

Oxygen and other oxidizing agents: glycerine and silicone should not be used with highly oxidizing agents such as oxygen, chlorine, nitric acid or hydrogen peroxide b ecause of danger of spontaneous chemical reactions, inflammability or explosion. In these cases the use of fluorinates is recommended.(see tab.1)

MAINTENANCE

Periodically it may be necessary to remove sediments from the diaphragm and to check the corrosion or wear conditions of the entire system. This operation must be carried out by specially trained staff.The diaphragm seal and its pressure gauge must be removed from process and inspected than the diaphragm must be cleaned without using any tool that could damage it but with a solvent properly chosen according to the sediment to be removed.

Tab.3 - Material available C=Connection M=Diaphragm seal

Type MGS9	C.st.	AISI 316 st.st.	C.st. + PTFE	AISI 316 st.st. + PTFE	AISI 316 L st.st.	Monel 400	Hast. C276	Hast. B2	Titanium	Nickel	Tantalium	Incolloy 825	Inconel 600
1B0				C	C M	C M	C M				M	M	M
1BS	C			C M	C M		M (1)		M		M (1)		
1A0-1AS		C			C M	M	M						
111		C			M	M	M						
6W		C			C M	C M	C M	C M			M		
MINI/A-B		C			M								
2B					C M	C M	C M				M	M	M
SA-AL-367		C			M								
R		C			C M		M						
3A		C			C M	M	M	M	M		M		
6		C		C M	C M	M	M		M		M		
3B		C		C M	C M	M	M		M		M		
5		C			C M	C M	C M				C M		
4		C		C M	C M	C M	C M	C M	C M	C M	C M	M	M
WAF		C		C	M		C M	M			M		
P	C		M										

(1) PTFE coating

Tab.4 - Ranges available

Type (1)	-1...0	0...1	0...1,6	0...2,5	0...4	0...6	0...10	0...16	0...25	0...40	0...60	0...100	0...160	0...250	0...400	0...600
1B0-1BS	F	F	F	F	F	F	F	F	F	F						
1A0											F	F	F	F	F	
1AS															F	F
111						F	F	F	F	F	F	F	F	F		
6W	F	F	F	F	F	F	F	F	F	F	F	F	F			
MINI/A					F (2)	F (2)	F (2)	F	F	F	F	F	F	F	F	
MINI/B	F	F	F	F	F	F	F	F	F	F	F					
2B	F	F	F	F	F	F	F	F	F	F	F	F	F			
SA DN25					F	F	F	F	F	F						
SA 1" 1/2 - DN40					F	F	F	F	F	F						
SA 2" - DN50			F	F	F	F	F	F	F	F						
AL 1" 1/2					F	F	F	F	F	F						
AL 2"			F	F	F	F	F	F	F	F						
AL 2" 1/2		F	F	F	F	F	F	F	F							
R						F	F	F	F	F	F	F	F	F		
367										F	F	F	F	F	F	
3A											F	F	F	F		
3B	F	F	F	F	F	F	F	F	F	F						
6	F	F	F	F	F	F	F	F	F	F						
5		F	F	F	F	F	F	F	F	F	F	F	F	F	F	
4		F	F	F	F	F	F	F	F	F						
WAF	F	F	F	F	F	F	F	F	F	F	F	F	F			
P		F	F	F	F	F	F									

(1) Ranges are indicated in bar and they are related to the DS of the instrument installed as well as the flange rating. For further information see the concerning catalogue sheet - (2) for DN63 only

PRESSURE/TEMPERATURE RATING
(in according to standard ANSI/ASME B16.5 - ISO 7005)

Tab. 5 - Class 150 (PN 290 psi - PN 20 bar)

Temperature		Pressure (psi)						
°F	°C	C.st.	AISI 304	AISI 316	AISI 316L	Monel	Hast. B	Hast. C
-20 100	-29÷38	285	275	275	230	230	290	290
200	93	260	230	235	195	200	260	260
300	149	230	205	215	175	190	230	230
400	204	200	190	195	160	185	200	200
500	260	170	170	170	145	170	170	170
600	316	140	140	140	140	140	140	140
650	343	125	125	125	125	125	125	125
700	371	110	110	110	110	110	110	110
750	399	95	95	95	95	95	95	95
800	427	80	80	80	80	80	80	80

Tab. 6 - Class 300 (PN 750 psi - PN 50 bar)

Temperature		Pressure (psi)						
°F	°C	C.st.	AISI 304	AISI 316	AISI 316L	Monel	Hast. B	Hast. C
-20 100	-29÷38	740	720	720	600	600	750	750
200	93	675	600	620	505	530	750	750
300	149	655	540	560	455	495	730	730
400	204	635	495	515	415	480	705	705
500	260	600	465	480	380	475	665	665
600	316	550	435	450	360	475	605	605
650	343	535	430	445	350	475	590	590
700	371	535	425	430	345	475	570	570
750	399	505	415	425	335	470	530	530
800	427	410	405	420	330	460	510	510

Tab. 7 - Class 600 (PN 1500 psi - PN 110 bar)

Temperature		Pressure (psi)						
°F	°C	C.st.	AISI 304	AISI 316	AISI 316L	Monel	Hast. B	Hast. C
-20 100	-29÷38	1480	1440	1440	1200	1200	1500	1500
200	93	1350	1200	1240	1015	1055	1500	1500
300	149	1315	1080	1120	910	990	1455	1455
400	204	1270	995	1025	825	955	1410	1410
500	260	1200	930	955	765	950	1330	1330
600	316	1095	875	900	720	950	1210	1210
650	343	1075	860	890	700	950	1175	1175
700	371	1065	850	870	685	950	1135	1135
750	399	1010	830	855	670	935	1065	1065
800	427	825	805	845	660	915	1015	1015

Tab. 8 - Class 900 (PN 2250 psi - PN 150 bar)

Temperature		Pressure (psi)						
°F	°C	C.st.	AISI 304	AISI 316	AISI 316L	Monel	Hast. B	Hast. C
-20 100	-29÷38	2220	2160	2160	1800	1800	2250	2250
200	93	2025	1800	1860	1520	1585	2250	2250
300	149	1970	1620	1680	1360	1485	2185	2185
400	204	1900	1490	1540	1240	1435	2115	2115
500	260	1795	1395	1435	1145	1435	1995	1995
600	316	1640	1310	1355	1080	1435	1815	1815
650	343	1610	1290	1330	1050	1435	1765	1765
700	371	1600	1275	1305	1030	1435	1705	1705
750	399	1510	1245	1280	1010	1405	1595	1595
800	427	1235	1210	1265	985	1375	1520	1520

Tab. 9 - Class 1500 (PN 3750 psi - PN 260 bar)

Temperature		Pressure (psi)						
°F	°C	C.st.	AISI 304	AISI 316	AISI 316L	Monel	Hast. B	Hast. C
-20 100	-29÷38	3705	3600	3600	3000	3000	3750	3750
200	93	3375	3000	3095	2530	2640	3750	3750
300	149	3280	2700	2795	2270	2470	3640	3640
400	204	3170	2485	2570	2065	2390	3530	3530
500	260	2995	2330	2390	1910	2375	3325	3325
600	316	2735	2185	2255	1800	2375	3025	3025
650	343	2685	2150	2220	1750	2375	2940	2940
700	371	2665	2125	2170	1715	2375	2840	2840
750	399	2520	2075	2135	1680	2340	2660	2660
800	427	2060	2015	2110	1645	2290	2540	2540

Tab. 10 - Class 2500 (PN 6250 psi - PN 420 bar)

Temperature		Pressure (psi)						
°F	°C	C.st.	AISI 304	AISI 316	AISI 316L	Monel	Hast. B	Hast. C
-20 100	-29÷38	6170	6000	6000	5000	5000	6250	6250
200	93	5625	5000	5160	4220	4400	6250	6250
300	149	5470	4500	4660	3780	4120	6070	6070
400	204	5280	4140	4280	3440	3980	5880	5880
500	260	4990	3880	3980	3180	3960	5540	5540
600	316	4560	3640	3760	3000	3960	5040	5040
650	343	4475	3580	3700	2920	3960	4905	4905
700	371	4440	3540	3620	2860	3960	4730	4730
750	399	4200	3460	3560	2800	3900	4430	4430
800	427	3430	3360	3520	2740	3820	4230	4230

Tab. 11 - CORROSION vs. MATERIAL

Corrosive Substance	Temp. °F	Temp. °C	Concentration	C.Steel	AISI 304 st.st.	AISI 316 st.st.	Bronze	Brass	Monel 400	Nickel	Hastelloy B	Hastelloy C	Tantalium	PVC	Halar	Teflon	VITON	Fluorolube
Acetic Acid	200	93,3	All	D	C	B	C	D	C	D	C	A	A	C	A	A	C	
Acetic Anhydride	175	79,4	All	D	D	B	D	D	C	C	B	A	A	D	A	A	C	
Acetone	100	37,8	All	B	B	B	A	A	A	A	A	A	A	D	A	A	C	
Acetylene, Dry	400	204,4	100	A	A	A	D	D	B	B	A	A	A	A	A	A	A	
Alcohols	212	100	All	B	B	A	A	A	A	A	A	A	A	A	A	A	A	
Alkali Cleaners	212	100	All	C	B	A	B	D	A	A	A	B	B	A	A	A	A	
Aluminium Chloride	212	100	All	D	D	D	D	D	D	D	A	B	A	A	A	A	A	
Aluminium Hydroxide	212	100	All	B	B	B	B	B	B	B	C	B	A	A	A	A	B	
Aluminium Sulphate	212	100	All	D	D	A	C	D	D	D	A	A	A	A	A	A	A	
Amil Acetate	250	121,1	All	B	B	A	A	A	A	A	A	A	A	D	C	A	C	
Ammonium Chloride	212	100	<40	D	D	C	C	D	B	B	B	A	A	A	A	A	A	
Ammonium, Dry	600	315,6	100	A	A	A	D	D	A	A	A	A	C	A	A	A	C	
Ammonium Hydroxide	212	100	All	B	B	B	D	D	D	D	B	B	D	A	A	A	B	
Ammonium Nitrate	212	100	All	D	C	B	D	D	D	D	C	B	A	A	A	A	C	•
Ammonium Sulphate	212	100	<50	D	D	B	C	D	B	B	C	B	A	A	A	A	C	
Aniline	250	121,1	100	A	A	A	D	D	B	B	B	B	A	D	C	A	C	
Argon	300	148,9	100	A	A	A	A	A	A	A	A	A	A	A	A	A	A	
Asphalt	250	121,1		B	B	A	B	B	A	A	B	A	A	B	A	A	A	
Atmosphere, Ind. & Marine				B	A	A	A	B	A	A	A	A	A	A	A	A	A	
Atmosphere, Rural				B	A	A	A	A	A	A	A	A	A	A	A	A	A	
Bauxite & Water	212	100	All	B	B	A	B	B	B	B	B	B	A	A	A	A	A	
Benzene	212	100	All	B	B	B	A	B	A	A	B	B	A	C	C	A	B	
Benzidine				B	B	B	B	B	B	B	B	B	A	C	A	A	B	
Benzoic Acid				D	D	B	C	C	B	B	A	A	A	A	A	A	A	
Bier	70	21,1		C	C	A	A	B	A	A	A	A	A	A	A	A	A	
Borax (sodium borate)	212	100	<50	B	B	C	A	A	A	A	A	B	A	A	A	A	A	
Boric Acid	212	100	All	D	D	B	B	B	B	B	A	A	A	A	A	A	A	
Bromine, Dry	125	51,7	100	D	D	D	D	D	A	A	A	A	A	D	A	A	A	
Bromobenzene	212	100	100	C	B	B	B	B	B	B	B	B	A	C	B	A	B	
Butane	212	100		A	A	A	A	A	A	A	A	A	A	B	A	A	A	
Butyl Alcohol	212	100		B	A	A	A	A	A	A	A	A	A	B	A	A	A	
Butyric Acid	212	100	All	D	C	B	C	D	B	C	B	A	A	C	A	A	C	
Calcium Bisolphite	212	100	All	D	C	B	D	D	D	D	D	C	A	A	A	A	A	
Calcium Chloride	212	100	All	C	C	C	B	C	B	A	B	A	A	A	A	A	A	
Calcium Hydroxide	212	100	10	B	B	B	B	B	B	B	B	A	C	A	A	A	A	
Calcium Hypochlorite	212	100	All	D	D	D	C	C	D	D	C	B	A	A	A	A	B	•
Carbon Dioxide, Dry	100	37,8		A	A	A	A	A	A	A	A	A	A	A	A	A	A	
Carbon Sulphide	125	51,7		B	B	A	B	A	B	B	A	A	A	D	A	A	A	
Carbon Tetrachloride, Dry	212	100	100	C	A	A	A	C	A	A	D	B	A	D	C	A	A	
Carbon Tetrachloride, Moist	212	100		D	D	C	D	D	A	A	D	B	A	D	C	A	A	
Carbonated Water	212	100	All	D	A	B	B	D	C	C	A	A	A	A	A	A	A	
Carbonic Oxide	300	148,9		A	A	A	A	B	A	A	A	A	A	A	A	A	A	
Caustic Potassium	212	100	<50	D	B	B	D	D	A	A	B	C	D	A	A	A	C	
Caustic Soda	212	100	All	C	C	C	D	D	B	B	B	C	D	A	A	A	C	
Caustic Soda	212	100	<40	C	B	A	B	D	A	A	A	B	D	A	A	A	C	
Cement Slurry	212	100	All	B	A	A	B	B	B	B	B	B	C	A	A	A	C	
Chloride	500	260		B	A	A	D	D	B	C	B	A	A	A	A	A	C	
Chlorine Dioxide	150	65,6		D	D	D	D	D	D	D	B	B	A	D	B	A	B	
Chlorine, Dry	200	93,3	100	B	B	C	B	C	B	B	C	A	A	C	A	A	A	•
Chlorine, Moist	200	93,3	All	D	D	D	D	D	D	D	D	A	A	C	A	A	A	•
Chloroacetic Acid	212	100	All	D	D	D	D	D	C	C	B	A	A	C	A	A	C	
Chlorobenzene	150	65,6	100	C	B	B	B	C	B	B	B	B	A	D	B	A	A	
Choroform, Dry	150	65,6	100	A	B	C	B	B	A	A	B	B	A	C	B	A	A	
Chromic Acid	212	100	All	C	D	D	D	D	D	D	D	D	A	C	A	A	A	
Chromium Plating Solution	212	100	All	C	D	D	D	D	D	D	D	D	A	C	A	A	A	
Citric Acid	212	100	All	D	C	A	C	D	C	C	A	A	A	A	A	A	A	
Coffee	212	100	All	D	B	A	A	C	B	B	B	A	A	A	A	A	A	
Copper Chloride	212	100	All	D	D	D	C	D	D	D	D	D	A	A	A	A	A	
Copper Nitrate	212	100	All	D	B	B	D	D	D	D	D	D	A	A	A	A	A	•
Copper Plating Solutions (Acid)	212	100	All	D	C	B	D	D	B	B	C	C	A	A	A	A	A	

A = Recommended	Best service life	Attack < 0,05 mm/year
B = Suitable	Good service life	Attack 0,05...0,5 mm/year
C = Not recommended	Fair service life	Attack 0,5...1,27 mm/year
D = Unsuitable	No service life	Attack > 1,27 mm/year

Thi tab is a guide. The purchaser will directly choose the most suitable material for the process conditions. (The diaphragm thickness goes from 0,05 mm to 0,15mm according to the material and the diaphragm type chosen.) For further information please contact our Service Technical Department.

Tab. 11 - CORROSION/MATERIAL

Corrosive substance	Temp. °F	Temp. °C	Concentration	C.Steel	AISI 304 st.st.	AISI 316 st.st	Bronze	Brass	Monel 400	Nickel	Hastelloy B	Hastelloy C	Tantalium	PVC	Halar	Teflon	VITON	Fluorolube
Copper Plating Solutions (cyanide)	212	100	All	B	A	A	D	D	B	B	B	A	A	A	A	A	A	
Copper Sulphate	212	100	<40	D	C	B	C	D	D	D	C	A	A	A	A	A	A	
Corn Oil	500	260	All	D	B	A	A	C	B	B	A	A	A	A	A	A	A	
Creosol	212	100	All	B	A	A	B	C	B	B	B	A	A	D	A	A	A	
Creosote	212	100		B	B	B	B	C	B	B	B	A	A	D	A	A	A	
Crude Oil	300	148,9	All	B	B	B	B	C	A	B	B	C	A	B	A	A	A	
Ethanol	212	100	All	B	A	A	A	A	A	A	B	A	A	A	A	A	A	
Ethyl Acetate	212	100	100	D	B	B	B	B	B	C	C	B	A	D	C	A	C	
Ethyl Chloride, Dry	212	100		B	C	A	A	A	B	A	B	B	A	D	A	A	A	
Ethylene Glycol	212	100	All	C	B	B	B	B	B	B	A	A	A	A	A	A	A	
Ethylene Oxide	75	23,9	100	B	A	B	D	D	B	B	A	A	A	C	B	A	C	
Fatty Acids	500	260	100	D	C	A	C	C	B	A	A	A	A	A	A	A	A	
Ferric Chloride	150	65,6	<50	D	D	D	D	D	D	D	D	B	A	A	A	A	A	
Ferric Sulphate	150	65,6	10	D	B	A	D	D	D	B	B	A	A	A	A	A	A	
Ferrous Chloride	212	100	<50	D	D	D	C	D	D	D	B	B	A	A	A	A	A	
Ferrous Sulphate	212	100	All	D	C	B	C	D	C	D	B	B	A	A	A	A	A	
Fluorine, Gas	300	148,9	100	D	A	A	C	C	A	A	C	B	D	B	A	A	C	
Fluorine, Liquid	75	23,9	100	D	A	A	B	C	A	A	C	B	C	B	B	A	C	
Fluorosilicic Acid	75	23,9	10	D	B	B	C	C	A	B	B	A	C	A	A	A	B	
Formaldehyde	212	100	<50	D	B	A	B	B	B	B	B	A	A	B	B	A	B	
Formic Acid	212	100	All	D	B	D	B	C	B	B	A	A	A	B	A	A	A	
Gasoline	200	93,3		A	A	A	A	A	C	A	A	A	A	B	A	A	A	
Glucose	300	148,9	All	B	A	A	A	A	A	A	A	A	A	A	A	A	A	
Glue	300	148,9	All	C	A	A	A	B	A	A	A	A	A	A	A	A	A	
Glycerine	212	100	All	B	A	A	B	B	A	A	A	A	A	A	A	A	A	
Hexane, Dry	212	100		A	A	A	A	A	A	A	A	A	A	A	A	A	A	
Hydrobromic Acid	212	100	All	D	D	D	D	D	D	D	B	D	A	B	A	A	A	
Hydrochloridric Acid	212	100	All	D	D	D	D	D	D	D	B	C	A	B	A	A	A	
Hydrofluoric Acid	212	100	All	D	D	D	C	D	B	D	B	B	D	C	A	A	C	
Hydrogen	500	260		B	A	A	A	A	A	A	A	A	A	A	A	A	A	
Hydrogen Chloride	400	204,4		D	C	C	D	D	A	A	A	A	A	A	A	A	A	
Hydrogen Fluoride, Dry	200	93,3	100	C	B	B	C	C	B	B	C	B	C	A	A	A	C	
Hydrogen Peroxide	212	100	30	D	C	B	D	D	C	C	C	C	A	A	A	A	A	•
Hydrogen Peroxide	212	100	100	D	C	C	D	D	C	C	D	C	A	A	A	A	A	•
Kerosene	300	148,9		A	A	A	A	A	A	A	A	A	A	A	A	A	A	
Lacquers & Thinners	200	93,3	All	B	A	A	A	B	A	A	A	A	A	D	C	A	C	
Lactic Acid	212	100	All	D	C	B	D	D	D	D	B	B	A	A	C	A	A	
Lime	212	100	All	B	B	B	B	B	B	B	B	A	A	A	A	A	A	
Linseed Oil	75	23,9		A	A	A	B	C	B	B	B	B	A	A	A	A	A	
Magnesium Chloride	212	100	<40	D	D	C	B	C	B	A	A	A	B	A	A	A	A	
Magnesium Oxide	212	100	All	B	B	B	A	B	B	A	B	B	D	A	A	A	A	
Magnesium Sulphate	212	100	<50	B	A	A	A	B	A	A	C	A	A	A	A	A	A	
Mercuric Chloride	75	23,9	10	D	D	D	D	D	D	C	C	B	A	A	A	A	A	
Mercury				A	A	A	D	D	C	B	B	B	A	A	A	A	A	
Methyl Chloride, Dry	212	100	100	A	B	A	A	B	B	B	B	B	A	D	A	A	A	
Methylene Chloride	212	100	100	C	C	C	C	B	B	C	A	A	A	D	C	A	B	
Milk				D	A	A	B	C	C	A	B	B	A	A	A	A	A	
Naphta	75	23,9	100	B	A	A	A	A	A	A	B	A	A	B	A	A	A	
Naphtaline	212	100	100	A	A	A	B	B	B	B	B	B	A	C	A	A	A	
Nickel Chloride	212	100	<40	D	D	C	D	D	B	C	A	B	A	A	A	A	A	
Nickel Sulphate	212	100		D	C	B	B	C	B	B	B	B	A	A	A	A	A	
Nitric Acid	75	23,9	All	D	A	A	D	D	D	D	D	B	A	A	A	A	A	•
Nitric Acid	212	100	All	D	C	C	D	D	D	D	D	D	A	C	B	A	C	•
Oxalic Acid	212	100	All	D	D	D	B	C	B	C	B	B	A	A	A	A	A	
Oxygen	300	148,9	All	A	A	A	A	A	A	A	A	A	A	A	A	A	A	•
Perchloric Acid	120	48,9	All	D	D	D	D	D	D	D	C	D	A	D	A	A	A	
Phenol	175	79,4	100	B	B	A	A	B	A	A	A	A	A	C	A	A	A	
Phosphoric Acid	212	100	All	D	C	C	D	D	D	D	B	C	A	A	A	A	A	
Phthalic Anhydride	250	121,1	100	B	A	A	C	C	A	A	B	A	A	C	B	A	B	
Picric Acid	212	100	All	D	B	B	D	D	D	D	D	B	A	C	A	A	A	

A = Recommended	Best service life	Attack < 0,05 mm/year
B = Suitable	Good service life	Attack 0,05...0,5 mm/year
C = Not recommended	Fair service life	Attack 0,5...1,27 mm/year
D = Unsuitable	No service life	Attack > 1,27 mm/year

Thi tab is a guide. The purchaser will directly choose the most suitable material for the process conditions. (The diaphragm thickness goes from 0,05 mm to 0,15mm according to the material and the diaphragm type chosen.) For further information please contact our Service Technical Department.

Tab. 11 - CORROSION/MATERIALS

Corrosive substances	Temp. °F	Temp. °C	Concentrations	Carbon steel	AISI 304 st.st.	AISI 316 st.st.	Bronze	Brass	Monel 400	Nickel	Hastelloy B	Hastelloy C	Tantalium	PVC	Halar	Teflon	VITON	Fluorolube
Propan	300	148,9		A	A	A	A	A	A	A	A	A	A	A	A	A	A	
Quinine	212	100	100	D	B	B	B	B	B	B	B	B	A	A	A	A	A	
Resin Solution	150	65,6	All	D	B	A	B	B	B	B	B	A	A	D	A	A	C	
Rochelle Salt	212	100	100	D	B	B	B	C	B	B	B	B	A	A	A	A	A	
Rosin	700	371,1	100	D	B	B	B	B	A	A	B	A	A	A	A	A	A	
Sea Water	75	23,9		D	C	C	D	C	A	A	A	A	A	A	A	A	A	
Silicate Solutions	212	100	All	B	A	A	B	B	A	A	A	A	A	A	A	A	A	
Silicone Fluids	212	100	100	A	A	A	A	A	A	A	A	A	A	A	A	A	A	
Silver Nitrate	212	100	<60	D	B	B	D	D	D	D	B	C	A	A	A	A	A	•
Soap & Detergents	212	100	All	B	A	A	A	B	A	A	A	A	A	A	A	A	A	
Sodium Bicarbonate	212	100	20	B	A	A	B	B	A	A	B	B	A	A	A	A	A	
Sodium Bisulphate	212	100	<10	D	B	B	B	D	B	B	B	B	A	A	A	A	A	
Sodium Bisulphite	212	100	<40	D	D	C	C	C	B	C	C	B	A	A	A	A	A	
Sodium Carbonate	212	100	<40	B	B	B	B	C	B	B	B	B	A	A	A	A	A	
Sodium Chloride	212	100	<40	C	C	C	B	B	B	B	B	B	A	A	A	A	A	
Sodium Cyanide	212	100	10	B	A	A	D	D	D	D	B	C	A	A	A	A	A	
Sodium Hydroxide	180	82,2	<60	C	B	A	B	C	A	A	A	B	D	A	A	A	C	
Sodium Hypochlorite	75	23,9	10	D	D	D	D	D	D	D	C	A	A	A	A	A	A	•
Sodium Nitrate	212	100	<50	B	A	A	C	C	B	B	C	B	A	A	A	A	B	•
Sodium Nitrate	212	100	60	B	C	B	B	B	B	B	B	B	A	A	A	A	B	
Sodium Peroxide	212	100	10	B	B	B	C	D	B	B	B	B	A	A	A	A	A	•
Sodium Phosphate (Tribasic)	212	100	All	B	A	A	B	B	B	B	A	B	A	A	A	A	A	
Sodium Silicate	212	100	All	B	A	A	B	B	B	B	B	B	A	A	A	A	A	
Sodium Sulphate	212	100	<50	B	B	B	B	B	B	B	B	B	A	A	A	A	A	
Sodium Sulphate	212	100	10	D	A	A	C	D	B	B	C	B	A	A	A	A	A	
Sodium Sulphide	175	79,4	20	D	A	A	D	D	B	B	B	B	D	A	A	A	A	
Steam	800	426,7		A	A	A	D	D	B	B	B	B	A	C	A	A	B	
Sulphur Chloride,Dry	212	100	100	D	B	C	C	C	C	B	C	B	A	A	A	A	A	
Sulphur Dioxide, Dry	500	260	100	B	B	B	C	D	B	B	B	B	A	A	A	A	C	
Sulphur Trioxide, Dry	300	148,9		B	B	B	C	C	B	B	A	B	D	A	A	A	A	
Sulphuric Acid	212	100	10	D	D	D	D	D	D	D	C	B	A	A	A	A	A	
Sulphuric Acid	212	100	<30	D	D	D	D	D	D	D	B	C	A	B	A	A	A	
Sulphuric Acid	212	100	100	D	D	D	D	D	D	D	B	B	A	C	A	A	A	
Sulphuric Acid, Fuming	175	79,4	100	D	A	B	D	D	D	D	B	B	C	C	A	A	B	
Sulphurous Acid	212	100	All	D	C	C	C	C	C	C	B	B	A	A	A	A	A	
Tannic Acid	212	100	All	C	B	B	B	C	B	B	B	B	A	A	A	A	A	
Tartaric Acid	212	100		D	A	A	B	C	B	B	B	B	A	A	A	A	A	
Tin Chloride	125	51,7	All	D	D	D	D	D	D	D	B	B	A	A	A	A	A	
Titanium Tetrachloride, Dry	75	23,9	100	A	B	B	D	D	B	B	B	B	A	A	A	A	A	
Toluene	212	100		A	A	A	A	A	A	A	A	A	A	D	A	A	B	
Trichloroacetic Acid	212	100	All	D	D	D	D	D	B	C	B	B	A	D	C	A	C	
Trichloroethane, Dry	125	51,7		A	A	A	A	A	A	A	A	A	A	D	C	A	B	
Trichloroethylene, Dry	300	148,9		B	B	B	B	B	A	A	B	A	A	D	D	A	A	
Turpentine	75	23,9	100	B	A	A	A	B	A	B	A	A	A	C	A	A	A	
Urea	100	37,8	50	C	A	A	B	B	B	B	B	B	A	A	A	A	A	
Varnish	250	121,1		A	A	A	B	B	A	A	A	A	A	D	A	A	A	
Vynil Chloride	150	65,6	100	C	B	B	C	C	A	A	B	A	A	D	A	A	A	
Water (demineralized)	212	100		C	A	A	A	B	A	A	A	A	A	A	A	A	A	
Whiskey (hot mash)	212	100		C	A	A	B	B	A	B	A	A	A	B	A	A	A	
Zinc Chloride	212	100	<40	D	D	D	C	D	B	B	B	B	A	A	A	A	A	
Zinc Sulphate	212	100	<30	D	A	A	B	D	B	B	B	B	A	A	A	A	A	

A = Recommended	Best service life	Attack < 0,05 mm/year
B = Suitable	Good service life	Attack 0,05...0,5 mm/year
C = Not recommended	Fair service life	Attack 0,5...1,27 mm/year
D = Unsuitable	No service life	Attack > 1,27 mm/year

This tab is a guide. The purchaser will directky choose the most suitable material for the process conditions. (The diaphragm thickness goes from 0,05 mm to 0,15 mm according to the material and the diaphragm type chosen) For further information please contact our Service Technical Department.

(1) For this application Nuova Fima developed special diaphragm seals in special materials that have been subjected to a corrosion test.
For further information please contact our SErvice Technical Department.

RB1 - 02/09

IN ORDER TO IMPROVE THEIR PRODUCTION, MESSRS. NUOVA FIMA RESERVE THE RIGHT TO THEMSELVES TO MAKE ALL THE MODIFICATIONS THAT THEY DEEM INDISPENSABLE AT ANY TIME. UPDATED DATA-SHEET ARE AVAILABLE ON SITE: www.nuovafima.com

NUOVA FIMA USA Inc.
www.nuovafima.com - e-mail: infousa@nuovafima.com
4123 Hollister, Suite G - TX 77080 Houston
TEL. +1 713.690.9800 - FAX +1 713.690.9803

NUOVA FIMA srl
www.nuovafima.com - e-mail: info@nuovafima.com
P.O. BOX 58 - VIA C. BATTISTI 59 - 28045 INVORIO (NO) ITALY
TEL. +39 0322 253200 - FAX +39 0322 253232

MGS9/1B

diaphragm seal
with threaded connection

Diaphragm seals are designed to isolate the sensing element of pressure gauges, pressure switches and electronic pressure transmitter from process fluids which may be corrosive, viscous, sedimentous and/or with a high temperature. The diaphragm, welded for model 1B0 and mechanically clamped between the upper housing and intermediate ring for model 1BS , is leak proof tested to guarantee fill fluid separation from process fluid. This diaphragm seal can be cleaned by removing the lower housing. This construction feature and its compact design suits to many applications requiring frequent maintenance.

4.1B0 - MGS9/1B0 - without intermediate ring

Available ranges (see table below)**:** *from 0...40 INWC to 0...580 psi* (from 0...0,1 to 0...40 bar).

Max working pressure: *0...870 psi* (60 bar) (3).

Process temperature: *-49...+302°F* (-45°C...+150°C.)

Accuracy (1): (add to instrument accuracy) ±0,5% for direct mounting, ±1% for capillary mounting.

Instrument connection: AISI 304 st.st.

Diaphragm material:

4 - AISI 316L st.st.,
6 - Monel 400,
9 - Hastelloy C 276,
B - Tantalum,
J - Alloy 600,
I - Alloy 825;
U - 25.22.2.

Gaskets: PTFE up to *+482°F* (+250°C); graphite over *+482°F* (+250°C)

Process connection:

5 - AISI 316L st.st.
N - AISI 316L st.st. PTFE coated (2),
6 - Monel 400
9 - Hastelloy C 276.

Clamp nuts and bolts: AISI 304 st.st.

Filling liquids: Silicon oil.

4.1BS - MGS9/1BS - with intermediate ring

Available ranges (see table below)**:** *from -30...0 INHG to 0...580 psi* (from -1...0 to 0...40 bar).

Max working pressure: *0...870 psi* (60 bar) (3).

Process temperature: *-49...+302°F* (-45°C...+150°C).

Accuracy (1): (add to instrument accuracy) ±0,5% for direct mounting, ±1% for capillary mounting.

Instrument connection: AISI 304 st.st..

Diaphragm material:

4 - AISI 316L st.st.
8 - AISI 316L st.st. PTFE coated,(2)
E - Hastelloy C276 PTFE coated,(2)
C - Tantalum PTFE coated,(2)
2 - Titanium.

Gaskets: PTFE up to *+482°F* (+250°C); graphite over *+482°F* (+250°C)

Process connection and intermediate ring:

5 - AISI 316L st.st.
N - AISI 316L st.st.,PTFE coated,(2)
F - Polipropylene,
V - PVC.

Clamp bolts: AISI 304 st.st.

Filling liquids: Silicon oil.

(1) at 68°F (20 °C) process temperature (or state temperature when ordering)
(2) Max temperature +302°F (+150°C), with PTFE coating - G 1/2 A only
(3) In case of order on demand of "continuous duty" model or in case of accidental overpressure, please see our catalogue MGS9/2B

Ranges

Instrument type	Minimum range	Maximum range	Notes
Bourdon tube, DS 4", 6" (100...150 mm)	*0...10 psi* (0...0,6 bar)	*0...580 psi* (0...40 bar)	Vacuum and compound gauges included
Diaphragm differential pressure gauges	*0...100 InH_2O* (0...250 mbar)	*0...360 psi* (0...25 bar)	Max static pressure 60 bar
Diaphragm pressure switches	*0...15 psi* (0...15 bar)	*0...580 psi* (0...40 bar)	Vacuum and compound gauges included
Pressure transmitters	*0...40 InH_2O* (0...100 mbar)	*0...580 psi* (0...40 bar)	Max static pressure 60 bar

ISO 9001 : 2008
Cert. nr. 0433/6

R(4 - 08/14

MGS9/1B0

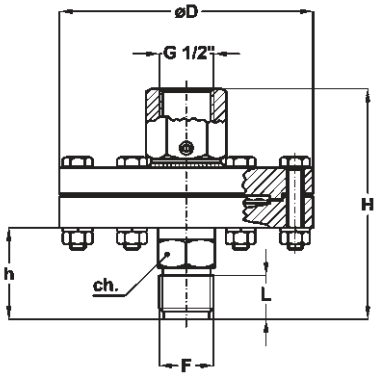

MGS9/1BS

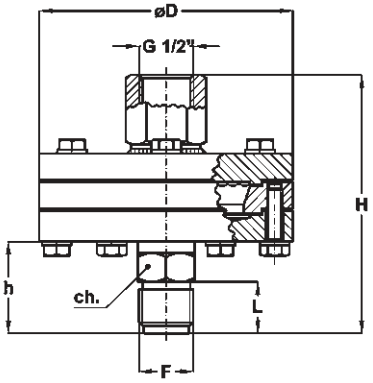

F	ø D	ch	H	h	L	Weight
41M-G 1/2 B	*3.85"*	*0.87"*	*3.50"*	*1.40"*	*0.78"*	*3.13 lbs*
43M-1/2 NPT*	(98)	(22)	(89)	(35,5)	(20)	(1,300 kg)

dimensions : *inches* (mm)

F	D	ch	H	h	L	Weight
41M-G 1/2 B	*3.85"*	*0.87"*	*3.94"*	*1.40"*	*0.78"*	*3.90 lbs*
43M-1/2 NPT*	(98)	(22)	(100)	(35,5)	(20)	(1,770 kg)

dimensions : *inches* (mm)

*Not available with PTFE coated process connections.

ASSEMBLING

All diaphragm seals are mounted on the instruments ad fixed by an aluminium protection label. For applications with capillary: shoul diaphragm seal and instrument not be at the same level, instrument adjustment is required). (For use and installation, see data sheet "4")

D - Direct	**9** - Capillary AISI304 st.st., AISI304 st.st. armoured, *36.37" max* (6 mt max)
1 - Nude capillary AISI304, *36.37" max* (6 mt max)	**6** - Capillary AISI316 st.st., AISI316 st.st. armoured, *36.37" max* (6 mt max)

FILLING FLUIDS and process fluid temperature

Fluid	Vacuum	Pressure	Fluid	Vacuum	Pressure
Standard silicon oil	*-40...+122°F* (-40...+100°C)	*-40...+302°F* (-40...+150°C)	**E** - Fluorinated liquid "E"	*-40...+212°F* (-40...+100°C)	*-40...+302°F* (-40...+150°C)
B - Silicon oil "B"	*-40...+302°F* (-40...+150°C)	*-40...+482°F* (-40...+250°C)	**F** - Silicon oil"C"	*-130...+176°F* (-90...+80°C)	*-130...+302°F* (-90...+150°C)
C - Silicon oil"C"	*-14...+392°F* (-10...+200°C)	*-14...+662°F* (-10...+350°C)	**G** - Mineral food oil "G"	*-14...+302F* (-10...+150°C)	*-14...+392°F* (-10...+200°C)
D - Silicon oil"D"	*-14...+392°F* (-10...+200°C)	*-14...+752°F* (-10...+400°C)			

OPTIONS

Description	MGS9/1BO	MGS9/1BS
C05 - Helium Test	◆	◆
E30 - Nace version MR0103/MR0175 (ISO 15156) (1)	◆	◆
TS5 - Washing plug - 1/4" NPT (4)	◆	◆
P04 - Dye penetrant test	◆	
P02 - Oxygen degreasing(2)	◆	◆
MPP - PTFE diaphragm protection, for temperature up to *302 °F* (150 °C) (3)	◆	◆
Special process connections (4) : 1/4" NPTF; 1/2" NPTF; 3/4" NPTF; 3/4" NPTM	◆	◆

(1) Stainless steel process connection and Monel 400 or Hastelloy C276 diaphragm
(2) To be ordered together with fluorinated liquid filling
(3) Except for pressure gauges and vacuum gauges
(4) Stainless steel process connection only

"HOW TO ORDER" SEQUENCE

Section/Model/Connection material/Diaphragm material/Process Connection/Instrument connection/Assembling / Options

4	**1B0**	**5, N, 6**	**4, 6, 9**	**41M**	**41F - G 1/2 F**	**D**	**B...G**
	1BS	**9, F, V**	**B, J, I**	**43M**		**1, 9, 6**	**C05...MPP**
			U, 8, E	**43F**			
			C, 2				

Copyright © Nuova Fima srl. All rights reserved. Any part of this publication should not be reproduced without a written Nuova Fima's srl approval

IN ORDER TO IMPROVE THEIR PRODUCTION, MESSRS. NUOVA FIMA RESERVE THE RIGHT TO THEMSELVES TO MAKE ALL THE MODIFICATIONS THAT THEY DEEM INDISPENSABLE AT ANY TIME. UPDATED DATA-SHEETS ARE AVAILABLE ON SITE: www.nuovafima.com

NUOVA FIMA USA Inc.
www.nuovafima.com - e-mail: infousa@nuovafima.com
4123 Hollister, Suite G - TX 77080 Houston
TEL. +1 713.690.9800 - FAX +1 713.690.9803

NUOVA FIMA srl
www.nuovafima.com - e-mail: info@nuovafima.com
P.O. BOX 58 - VIA C. BATTISTI 59 - 28045 INVORIO (NO) ITALY
TEL. +39 0322 253200 - FAX +39 0322 253232

MGS9/1A

back side diaphragm seal for high pressure, with threaded connection

PED 2014/68/EU

Diaphragm seals are designed to isolate the sensing element of pressure gauges, pressure switches and electronic pressure transmitter from process fluids which may be corrosive, viscous, sedimentous and/or with a high temperature. The diaphragm is mechanically clamped between the upper housing and intermediate ring and is leak proof tested to guarantee fill fluid separation from process fluid. Model MGS9/1A0 is cleaned by removing the lower housing from the intermediate ring. Both models are without sealing gaskets. This construction feature and its compact design suits many application that require frequent maintenance, for model MGS9/1A0.

4.1AS - MGS9/1AS

Working pressure: *from 0...6000 to 0...8000 psi;* (from 0...400 bar to 0...600 bar).
Working temperature: *-49...+302 °F* (-45°C...+150°C).
Accuracy*: (add to instrument accuracy) ±0,5% for direct mounting; ±1% for capillary mounting.
Instrument connection: AISI 316 st. st.
Diaphragm: metallic seal,
4 - AISI 316L st.st.,
9 - Hastelloy C276,
6 - Monel 400.
Process connection:
4 - AISI 316 st.st.,
5 - AISI 316 L st.st.
Clamp bolts: high tensile carbon steel.
Filling liquid: silicon oil.

4.1A0 - MGS9/1A0

Working pressure: *from 0...1000 to 0...6000 psi;* (from 0...60 bar to 0...400 bar).
Working temperature: *-49...+302 °F* (-45°C...+150°C).
Accuracy*: (add to instrument accuracy) ±0,5% for direct mounting; ±1% for capillary mounting.
Instrument connection: AISI 316 st. st.
Diaphragm: metallic seal,
4 - AISI 316L st.st.,
9 - Hastelloy C276,
6 - Monel 400.
Intermediate ring: AISI 316 st.st.
Process connection:
4 - AISI 316 st.st.,
5 - AISI 316 L st.st.
Clamp bolts: stainless steel.
Filling liquid: silicon oil.

* at *68°F* (20 °C) process temperature (or state temperature when ordering)

back side diaphragm seal
for high pressure, with threaded connection

MGS9/1A

MGS9/1AS

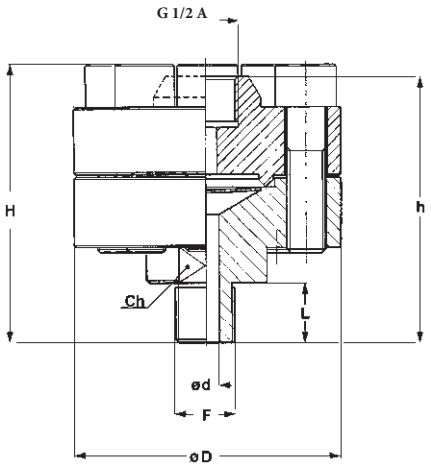

MGS9/1A0

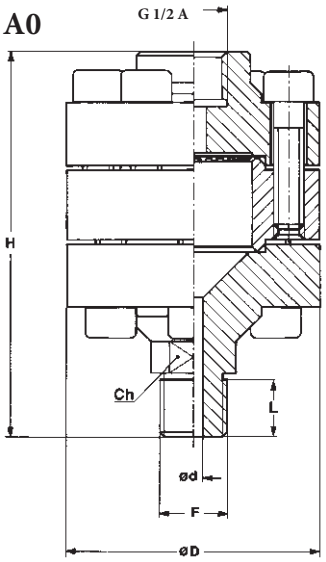

F	d	H	h	L	D	Ch
41M - G 1/2 B	*0.27"*	*3.66"*	*3.50"*	*0.78"*	*3.50"*	*1.41"*
43M - 1/2 NPT	(7)	(93)	(89)	(20)	(89)	(36)

F	d	H	L	D	Ch
41M - G 1/2 B	*0.23"*	*4.78"*	*0.78"*	*3.14"*	*0.86"*
43M - 1/2 NPT	(6)	(121,5)	(20)	(80)	(22)

dimensions : *inches* (mm)

ASSEMBLING

All diaphragm seals are mounted on the instruments ad fixed by an aluminium protection label. For applications with capillary: shoul diaphragm seal and instrument not be at the same level, instrument adjustment is required). (For use and installation, see data sheet "4")

D - Direct	**9** - Capillary AISI304 st.st., AISI304 st.st. armoured, *36.37" max* (6 mt max)
1 - Nude capillary AISI304, *36.37" max* (6 mt max)	**6** - Capillary AISI316 st.st., AISI316 st.st. armoured, *36.37" max* (6 mt max)

FILLING FLUIDS and process fluid temperature

Fluid	Vacuum	Pressure	Fluid	Vacuum	Pressure
Standard silicon oil	*-40...+122°F* (-40...+100°C)	*-40...+302°F* (-40...+150°C)	**E** - Fluorinated liquid "E"	*-40...+212°F* (-40...+100°C)	*-40...+302°F* (-40...+150°C)
B - Silicon oil "B"	*-40...+302°F* (-40...+150°C)	*-40...+482°F* (-40...+250°C)	**F** - Silicon oil"C"	*-130...+176°F* (-90...+80°C)	*-130...+302°F* (-90...+150°C)
C - Silicon oil"C"	*-14...+392°F* (-10...+200°C)	*-14...+662°F* (-10...+350°C)	**G** - Mineral food oil "G"	*-14...+302F* (-10...+150°C)	*-14...+392°F* (-10...+200°C)
D - Silicon oil"D"	*-14...+392°F* (-10...+200°C)	*-14...+752°F* (-10...+400°C)			

OPTIONS

R20 -	Adaptor G 1/2 A M/F
R22 -	Adaptor G 1/2 A M x 1/2 - 14 NPT F
R21 -	Adaptor G 1/2 A M x 1/4 - 18 NPT F
T11 -	Washing plug
C05 -	Helium Test
E30 -	Nace version MR0103 (1) - MR0175 (ISO 15156) (2)

(1) Stainless steel process connection and Monel 400 or Hastelloy C276 diaphragm. (2) Wetted parts hastelloy C276

"HOW TO ORDER" SEQUENCE

Section/Model/Connection material/Diaphragm material/Process Connection/Instrument connection/Assembling/Options

4	**1AS**	**4**	**4, 9, 6**	**41M**	**41F - G 1/2 F**	**D**	**B...G**
	1A0	**5**		**43M**		**1, 9, 6**	**R20...E30**

Copyright © Nuova Fima srl. All rights reserved. Any part of this publication should not be reproduced without a written Nuova Fima's srl approval

NUOVA FIMA USA Inc.
www.nuovafima.com - e-mail: infousa@nuovafima.com
4123 Hollister, Suite G - TX 77080 Houston
TEL. +1 713.690.9800 - FAX +1 713.690.9803

NUOVA FIMA srl
www.nuovafima.com - e-mail: info@nuovafima.com
P.O. BOX 58 - VIA C. BATTISTI 59 - 28045 INVORIO (NO) ITALY
TEL. +39 0322 253200 - FAX +39 0322 253232

RG4 - 08/14

IN ORDER TO IMPROVE THEIR PRODUCTION, MESSRS. NUOVA FIMA RESERVE THE RIGHT TO THEMSELVES TO MAKE ALL THE MODIFICATIONS THAT THEY DEEM INDISPENSABLE AT ANY TIME. UPDATED DATA-SHEETS ARE AVAILABLE ON SITE: www.nuovafima.com

MGS9/111

back side diaphragm seals, with threaded connection

Diaphragm seals are designed to isolate the sensing element of pressure gauges, pressure switches and electronic pressure transmitter from process fluids which may be corrosive, viscous, sedimentous and/or with a high temperature. The diaphragm is welded to the top housing and leak proof tested, to guarantee a separation between process fluid and fill transmission fluid. The upper part is detachable from the lower process side for cleaning. This construction feature and its compact design suits many application that require frequent maintenance.

4.111 - MGS9/111

Working pressure: *from 0...100 to 3000 psi* (from 0...6 bar to 0...250 bar).
Working temperature: *-49...+302°F* (-45°C...+150°C.)
Accuracy*: (add to instrument accuracy) ±0,5% for direct mounting; ± 1% for capillary mounting.
Instrument connection: AISI 316 st.st.
Diaphragm: welded,
4 - AISI 316L st.st.,
9 - Hastelloy C276,
6 - Monel 400.
Hexagonal nut: AISI 304 st.st.
Process connection:
4 - AISI 316 st.st.
Filling liquid: silicon oil.

* at *68°F* (20 °C) process temperature (or state temperature when ordering)

RG - 08/14

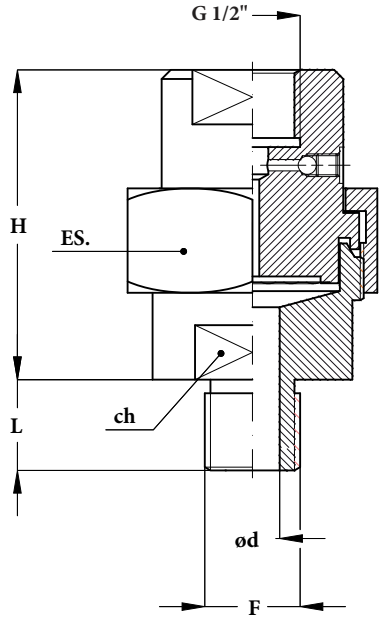

F	d	H	L	ES.	Ch
41M G 1/2 A	*0.47"* (12)	*2.67"* (68)	*0.78"* (20)	*2.16"* (55)	*1.41"* (36)
43M 1/2-14 NPT	*0.47"* (12)	*2.67"* (68)	*0.78"* (20)	*2.16"* (55)	*1.41"* (36)
43F 1/2-14 NPT F		*2.67"* (68)		*2.16"* (55)	*1.41"* (36)
53F 3/4-14 NPT F		*2.67"* (68)		*2.16"* (55)	*1.41"* (36)

dimensions : *inches* (mm)

ASSEMBLING

All diaphragm seals are mounted on the instruments ad fixed by an aluminium protection label. For applications with capillary: shoul diaphragm seal and instrument not be at the same level, instrument adjustment is required). (For use and installation, see data sheet "4")

D - Direct	**9** - Capillary AISI304 st.st., AISI304 st.st. armoured, *36.37" max* (6 mt max)
1 - Nude capillary AISI304, *36.37" max* (6 mt max)	**6** - Capillary AISI316 st.st., AISI316 st.st. armoured, *36.37" max* (6 mt max)

FILLING FLUIDS and process fluid temperature

Fluid	Vacuum	Pressure	Fluid	Vacuum	Pressure
Standard silicon oil	*-40...+122°F* (-40...+100°C)	*-40...+302°F* (-40...+150°C)	**E** - Fluorinated liquid "E"	*-40...+212°F* (-40...+100°C)	*-40...+302°F* (-40...+150°C)
B - Silicon oil "B"	*-40...+302°F* (-40...+150°C)	*-40...+482°F* (-40...+250°C)	**F** - Silicon oil"C"	*-130...+176°F* (-90...+80°C)	*-130...+302°F* (-90...+150°C)
C - Silicon oil"C"	*-14...+392°F* (-10...+200°C)	*-14...+662°F* (-10...+350°C)	**G** - Mineral food oil "G"	*-14...+302F* (-10...+150°C)	*-14...+392°F* (-10...+200°C)
D - Silicon oil"D"	*-14...+392°F* (-10...+200°C)	*-14...+752°F* (-10...+400°C)			

OPTIONS

C05 -	Helium Test
E30 -	Nace version MR 01.03 (1)
P02 -	Oxygen degreasing (2)
P04 -	Dye penetrant test

(1) Stainless steel process connection and Monel 400 or Hastelloy C276 diaphragm

(2) To be ordered together with fluorinated liquid filling

"HOW TO ORDER" SEQUENCE

Section/Model/Connection material/Diaphragm material/Process Connection/Instrument connection/Assembling/Options

4	**111**	**4**	**4, 6, 9**	**41M** **43M** **43F** **53F**	**41F - G 1/2 F**	**D** **1, 9, 6**	**B...G** **C05...P04**

Copyright © Nuova Fima srl. All rights reserved. Any part of this publication should not be reproduced without a written Nuova Fima's srl approval

IN ORDER TO IMPROVE THEIR PRODUCTION, MESSRS. NUOVA FIMA RESERVE THE RIGHT TO THEMSELVES TO MAKE ALL THE MODIFICATIONS THAT THEY DEEM INDISPENSABLE AT ANY TIME. UPDATED DATA-SHEETS ARE AVAILABLE ON SITE: www.nuovafima.com

NUOVA FIMA USA Inc.
www.nuovafima.com - e-mail: infousa@nuovafima.com
4123 Hollister, Suite G - TX 77080 Houston
TEL. +1 713.690.9800 - FAX +1 713.690.9803

NUOVA FIMA srl
www.nuovafima.com - e-mail: info@nuovafima.com
P.O. BOX 58 - VIA C. BATTISTI 59 - 28045 INVORIO (NO) ITALY
TEL. +39 0322 253200 - FAX +39 0322 253232

MGS9/2B

“continuous duty” diaphragm seal, welded, with threaded connection

Diaphragm seals are designed to isolate the sensing element of pressure gauges, pressure switches and electronic pressure transmitter from process fluids which may be corrosive, viscous, sedimentous and/or with a high temperature. In case of accidental removal of the instrument or of liquid filling leak the diaphragm will place on the upper cup preventing any damage and any process liquid leak. Thanks to an exclusive calibration system the pressure gauge should stand an overpressure of 210bar without the help of any pressure control switch .

4.2B0 - MGS9/2B

Design: ASME B40.2
Working pressure: *from -30...0 INHG to 0...2320 psi* (from -1...0 to 0...160 bar).
“Continuous duty”: *3000 psi* (210 bar) as per ASME B40.2.
Process temperature: *-49...+302°F* (-45°C...+150°C.)
Accuracy (1): (add to instrument accuracy) ±0,5% for direct mounting, ±1% for capillary mounting.
Instrument connection: AISI 304 st.st.
Diaphragm material:
4 - AISI 316L st.st.,
6 - Monel 400,
9 - Hastelloy C 276,
B - Tantalum,
J - Alloy 600;
I - Alloy 825;
U - 25.22.2.
Gaskets: PTFE up to *+482°F* (+250°C).
Process connection:
5 - AISI 316L st.st.
6 - Monel 400
9 - Hastelloy C 276.
Clamp nuts and bolts: high resistance steel.
Filling liquids: Silicon oil.
Special overpressure: *3000 psi for 1 hour* (210 bar) (2) (3).

(1) at 68°F (20 °C) process temperature (or state temperature when ordering)
(2) on request only, pressure gauge/pressure switch assembling only
(3) Vacuum and compound gauges excluded

"continuous duty" diaphragm seal welded, with threaded connection

MGS9/2B

RS - 08/14

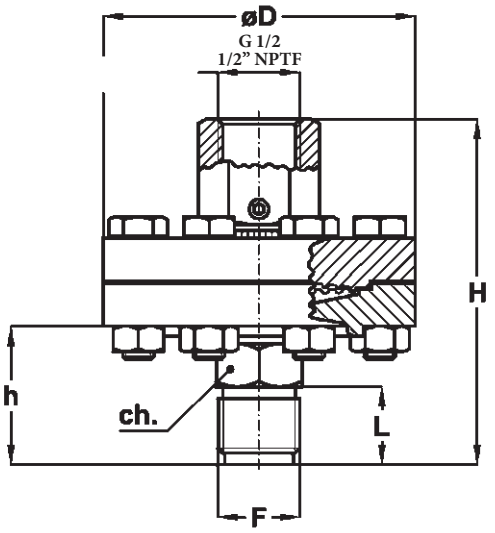

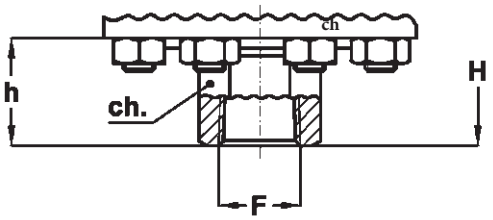

F	D	ch	H	h	L	Weight
41M - G 1/2 B	*3.15"*	*0.87"*	*3.54"*	*2.79"*	*0.79"*	*2.36 lbs*
43M - 1/2 NPT	(80)	(22)	(90)	(35,5)	(20)	(1,070 kg)

dimensions : *inches* (mm)

F	D	ch	H	h	Weight
43F	*3.15"*	*1.06"*	*3.23"*	*1.08"*	*2.34 lbs*
1/2 NPT F	(80)	(27)	(82)	(27,5)	(1,060 kg)

dimensions : *inches* (mm)

ASSEMBLING

All diaphragm seals are mounted on the instruments ad fixed by an aluminium protection label. For applications with capillary: shoul diaphragm seal and instrument not be at the same level, instrument adjustment is required). (For use and installation, see data sheet "4")

D - Direct	**9** - Capillary AISI304 st.st., AISI304 st.st. armoured, *36.37" max* (6 mt max)
1 - Nude capillary AISI304, *36.37" max* (6 mt max)	**6** - Capillary AISI316 st.st., AISI316 st.st. armoured, *36.37" max* (6 mt max)

FILLING FLUIDS and process fluid temperature

Fluid	Vacuum	Pressure	Fluid	Vacuum	Pressure
Standard silicon oil	*-40...+122°F* (-40...+100°C)	*-40...+302°F* (-40...+150°C)	**E** - Fluorinated liquid "E"	*-40...+212°F* (-40...+100°C)	*-40...+302°F* (-40...+150°C)
B - Silicon oil "B"	*-40...+302°F* (-40...+150°C)	*-40...+482°F* (-40...+250°C)	**F** - Silicon oil"C"	*-130...+176°F* (-90...+80°C)	*-130...+302°F* (-90...+150°C)
C - Silicon oil"C"	*-14...+392°F* (-10...+200°C)	*-14...+662°F* (-10...+350°C)	**G** - Mineral food oil "G"	*-14...+302F* (-10...+150°C)	*-14...+392°F* (-10...+200°C)
D - Silicon oil"D"	*-14...+392°F* (-10...+200°C)	*-14...+752°F* (-10...+400°C)			

OPTIONS

C05 -	Helium Test (1)
E30 -	Nace version MR0103/MR0175 (ISO 15156) (2)
TS5 -	AISI316L stainless steel washing plug, 1/4" NPT
P04 -	Dye penetrant test
BAI -	Stainless steel fixing bolts (5)
S40 -	Max overpressure *3000 psi* (210 bar) (3) (4)
MPP -	PTFE diaphragm protection, for temperature up to *302 °F* (150 °C) (3)
	Special process connections (1) : 1/4" NPTF; 3/4" NPTF; 3/4 NPTM

(1) on models with AISI316L process connection only

(2) Stainless steel process connection and Monel 400 or Hastelloy C276 diaphragm

(3) Except for vacuum and compound gauges

(4) for pressure gauge/pressure switch assembling only

(5) max 100 bar

"HOW TO ORDER" SEQUENCE

Section/Model/Connection material/Diaphragm material/Process Connection/Instrument connection/Assembling/Options

4	**2B0**	**5**	**4, 6, 9**	**41M**	**41F - G 1/2 F**	**D**	**B...G**
		6	**B, J, I**	**43M**	**43F - 1/2NPT F**	**1, 9, 6**	**C05...MPP**
		9	**U**	**43F**			

Copyright © Nuova Fima srl. All rights reserved. Any part of this publication should not be reproduced without a written Nuova Fima's srl approval

IN ORDER TO IMPROVE THEIR PRODUCTION, MESSRS. NUOVA FIMA RESERVE THE RIGHT TO THEMSELVES TO MAKE ALL THE MODIFICATIONS THAT THEY DEEM INDISPENSABLE AT ANY TIME. UPDATED DATA-SHEETS ARE AVAILABLE ON SITE: www.nuovafima.com

NUOVA FIMA USA Inc.
www.nuovafima.com - e-mail: infousa@nuovafima.com
4123 Hollister, Suite G - TX 77080 Houston
TEL. +1 713.690.9800 - FAX +1 713.690.9803

NUOVA FIMA srl
www.nuovafima.com - e-mail: info@nuovafima.com
P.O. BOX 58 - VIA C. BATTISTI 59 - 28045 INVORIO (NO) ITALY
TEL. +39 0322 253200 - FAX +39 0322 253232

MGS9/MINI

compact diaphragm seals, welded

Diaphragm seals are designed to isolate the sensing element of pressure gauges and pressure switches from process fluids that may be corrosive, viscous, sedimentous and/or with a high temperature. The diaphragm is welded to the body, to ensure separation of the filling fluid from the process medium. The threaded connection make it easy to use on all applications where the reduced size of the system is important and also where gauges of *2.5"* (63 mm) diameter are required.

4.MIA - MGS9/MINI/A

Working pressure: *up to 0...6000 psi* (up to 0...400 bar), as from RANGES table.
Working temperature: *-49...302°F* (-45...+150°C).
Accuracy(1): (add to instrument accuracy) ±1,0 % for direct mounting; ± 1% for capillary mounting.
Instrument connection: AISI 316 L st.st.
Diaphragm: welded,
4 - AISI 316 L st.st.
Process connection:
5 - AISI 316 L st.st.
Filling liquid: silicon oil.

4.MIB - MGS9/MINI/B

Working pressure: *up to 0...1000 psi* (up to 0...60 bar), as from RANGES table.
Other features: as model MGS9/MIA.

(1) at *68°F* (20 °C) process temperature (or state temperature when ordering)

RANGES

Gauge DS	MGS9/MIA	MGS9/MIB
2.5" (63 mm)	*0...60/0...6000 psi* (0...4/0...400 bar)	*-30...0 InHG /0...1000 psi* (-1...0/0...60 bar)
4"...6" (100...150 mm)	*0...200/0...6000 psi* (0...16/0...400 bar)	

ASSEMBLING

D - All diaphragm seals are mounted directly on the instruments.
All diaphragm seals are mounted on the instruments ad fixed by an aluminium protection label.

ISO 9001 : 2008
Cert. nr. 0433/6

RG - 08/14

MGS9/MIA

MGS9/MIB

f
41F - G 1/2
21F - G 1/4
23F - 1/4-18 NPT

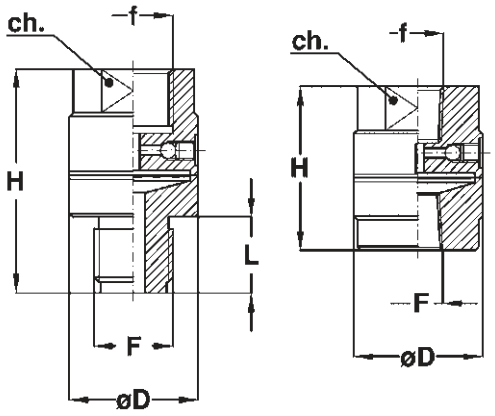

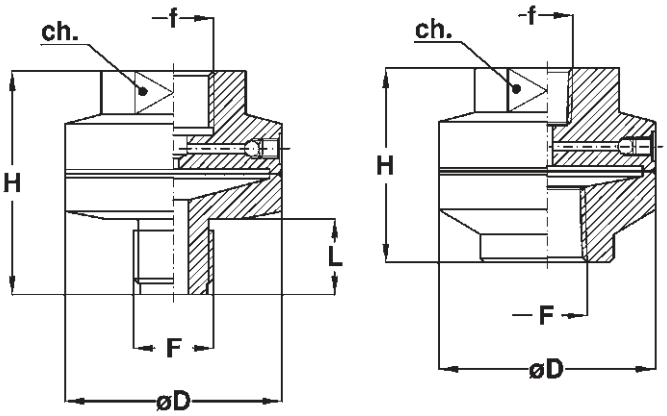

F (1)	D	H	Ch	L
23F 1/4-18 NPT F	*1.33"* (34)	*1.69"* (43)	*1.06"* (27)	-
43M 1/2-14 NPT M	*1.33"* (34)	*2.32"* (59)	*1.06"* (27)	*0.78"* (20)
43F 1/2-14 NPT F	*1.33"* (34)	*1.69"* (43)	*1.06"* (27)	-
41M G 1/2 B	*1.33"* (34)	*2.32"* (59)	*1.06"* (27)	*0.78"* (20)

(1)other threads available on request

dimensions : *inches* (mm)

F (1)	D	H	Ch	L
23F 1/4-18 NPT F	*2.24"* (57)	*2"* (51)	*1.25"* (32)	- -
43M 1/2-14 NPT M	*2.24"* (57)	*2.32"* (59)	*1.25"* (32)	*0.78"* (20)
43F 1/2-14 NPT F	*2.24"* (57)	*2"* (51)	*1.25"* (32)	- -
41M G 1/2 B	*2.24"* (57)	*2.32"* (59)	*1.25"* (32)	*0.78"* (20)

(1)other threads available on request

dimensions : *inches* (mm)

FILLING FLUIDS and process fluid temperature

Fluid	Vacuum	Pressure	Fluid	Vacuum	Pressure
Standard silicon oil	*-40...+122°F* (-40...+100°C)	*-40...+302°F* (-40...+150°C)	**E** - Fluorinated liquid "E"	*-40...+212°F* (-40...+100°C)	*-40...+302°F* (-40...+150°C)
B - Silicon oil "B"	*-40...+302°F* (-40...+150°C)	*-40...+482°F* (-40...+250°C)	**F** - Silicon oil"C"	*-130...+176°F* (-90...+80°C)	*-130...+302°F* (-90...+150°C)
C - Silicon oil"C"	*-14...+392°F* (-10...+200°C)	*-14...+662°F* (-10...+350°C)	**G** - Mineral food oil "G"	*-14...+302F* (-10...+150°C)	*-14...+392°F* (-10...+200°C)
D - Silicon oil"D"	*-14...+392°F* (-10...+200°C)	*-14...+752°F* (-10...+400°C)			

"HOW TO ORDER" SEQUENCE

Section/Model/Connection material/Diaphragm material/Process Connection/Instrument connection/Assembling/Options

4	**MIA**	**5**	**4**	**41M**	**21F**	**D**	**B...G**
	MIB			**43M**	**23F**		
				23F	**41F**		
				43F			

IN ORDER TO IMPROVE THEIR PRODUCTION, MESSRS. NUOVA FIMA RESERVE THE RIGHT TO THEMSELVES TO MAKE ALL THE MODIFICATIONS THAT THEY DEEM INDISPENSABLE AT ANY TIME. UPDATED DATA-SHEETS ARE AVAILABLE ON SITE: **www.nuovafima.com**

Copyright © Nuova Fima srl. All rights reserved. Any part of this publication should not be reproduced without a written Nuova Fima's srl approval

NUOVA FIMA USA Inc.
www.nuovafima.com - e-mail: infousa@nuovafima.com
4123 Hollister, Suite G - TX 77080 Houston
TEL. +1 713.690.9800 - FAX +1 713.690.9803

NUOVA FIMA srl
www.nuovafima.com - e-mail: info@nuovafima.com
P.O. BOX 58 - VIA C. BATTISTI 59 - 28045 INVORIO (NO) ITALY
TEL. +39 0322 253200 - FAX +39 0322 253232

MGS9/SA

sanitary diaphragm seal threaded process connection
DIN, IDF/ISS

74-06
Autorization NO. 1599

Diaphragm seals are designed to isolate the sensing element of pressure gauges and pressure switches from process fluids which may be corrosive, viscous, sedimentous and/or with a high temperature. The diaphragm is welded to the upper body, to ensure separation of filling fluid from process medium. Designed in accordance with food and pharmaceutical standards to permit easy removal from the plant whilst maintains the hygienic feature during frequent cleaning.

4.SAN - MGS9/SA

Design: 74-06 SSI.
Working pressure: *from 0...30 to 0...600 psi* (from 0...1 to 0...40 bar).
Minimum working pressure as from MINIMUM RANGES table .
Process temperature: *-4...+212°F* (-20°C...+100°C);
Max *284°F* (140 °C) for 30 minutes during cleaning stage (C.I.P.) [1] and sterilization (S.I.P) [2].
Accuracy [2]**:** (add to instrument accuracy) ±0,5% for direct mounting.
Instrument connection: AISI 316 st.st..
Diaphragm: welded, **4** - AISI 316 L st.st.

Filling liquid: mineral oil (FDA approved) for food industry.
Process connection: AISI 316 (Cod. **4**)st.st. as per:
-DIN 11851;
-IDF/ISS;
see "MINIMUM RANGES" table for dimensions, with finishing Ra ≤ 0,76 µm (welded parts included), as per ASME BPE SF3.
Union nut: AISI 304 st.st.

1) C.I.P. = Cleaned In Place
2) S.I.P. = Steamed In Place - available for ranges > 1bar when steam pressure does not exceed the max admissible pressure on the connected instrument
3) at *+68°F* (20 °C) process fluid temperature, or state temperature when ordering.

MINIMUM RANGES

		Female with union nut		Male	
Process connection	**DN**	**DS 2.5" (63mm)**	**DS 4" (100mm)**	**DS 2.5" (63mm)**	**DS 4" (100mm)**
DIN 11851	25	*0...60 psi* (0...4 bar)	*0...60 psi* (0...4 bar)	*0...100 psi* (0...6 bar)	
	32		*0...60 psi* (0...4 bar)		*0...60 psi* (0...4 bar)
	40		*0...30 psi* (0...1,6 bar)		*0...60 psi* (0...4 bar)
	50		*0...15 psi* (0...1 bar)		*0...30 psi* (0...1,6 bar)
IDF/ISS	1" 1/2		*0...60 psi* (0...4 bar)		*0...60 psi* (0...4 bar)
	2"		*0...30 psi* (0...1,6 bar)		*0...30 psi* (0...1,6 bar)

ASSEMBLING

D - All diaphragm seals are mounted directly on the instruments.
All diaphragm seals are mounted on the instruments ad fixed by an aluminium protection label.

RK7 - 02/16

Female with union nut

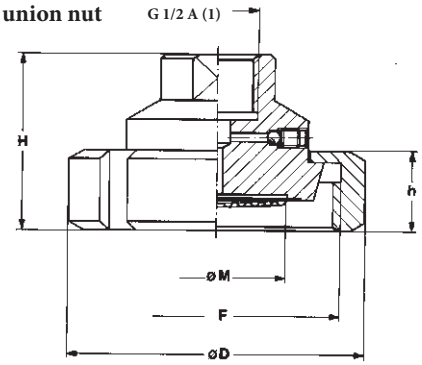

(1) DN 25 = G 1/2 A, G 1/4 A; 1" = G 1/4 A

DN	Code	H	h	D	M	F (DIN 405)
25	QHF	*1.81" (*46)	0.82" (21)	2.48" (63)	1.18" (30)	Rd 52 x 1/6
32	RHF	1.81" (46)	0.82" (21)	2.75" (70)	1.18" (30)	Rd 58 x 1/6
40	SHF	1.81" (46)	0.82" (21)	3.07" (78)	1.57" (40)	Rd 65 x 1/6
50	THF	1.85" (47)	0.86" (22)	3.62" (92)	1.96" (50)	Rd 78 x 1/6

(*) G 1/4 A : *1.63"* (41,5 mm)

Male

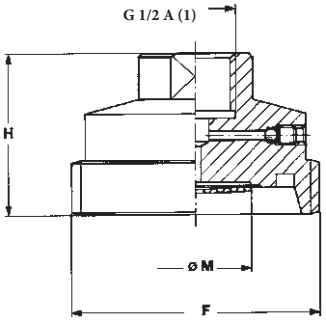

(1) DN 25 and 1" = G 1/4 A

DN	Code	H	M	F (DIN 405)
25	QHM	1.45" (37)	0.78" (20)	Rd 52 x 1/6
32	RHM	1.65" (42)	1.18" (30)	Rd 58 x 1/6
40	SHM	1.65" (42)	1.18" (30)	Rd 65 x 1/6
50	THM	1.65" (42)	1.57" (40)	Rd 78 x 1/6

dimensions : *inches* (mm)

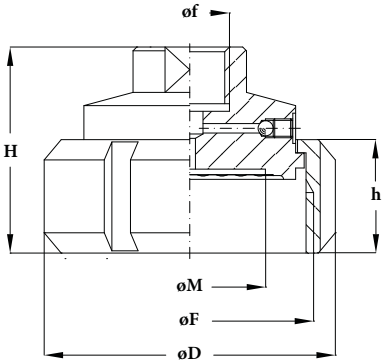

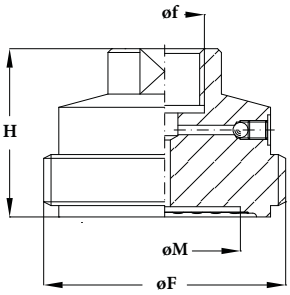

IDF/ISS

DN	Code	H	h	D	M	F (ACME)
1" 1/2	AMF	2.14"	1.18"	2.51"	1.18"	2" 1/32 x 8
2"	BMF	2.14"	1.18"	3.03"	1.57"	2" 9/16 x 8

IDF/ISS

DN	Code	H	M	F (ACME)
1" 1/2	AMM	1.75"	1.18"	2" 1/32 x 8
2"	BMM	1.75"	1.57"	2" 9/16 x 8

dimensions : *inches*

OPTIONS

P04 - Dye penetrant test	**C05** - Helium Test

"HOW TO ORDER" SEQUENCE

Section/Model/Connection material/Diaphragm material/Process Connection/Instrument connection/Assembling/Options

4	SAN	4	4	QHF...THM AMF...BMM	41F - G 1/2 F	D	C05, P04

IN ORDER TO IMPROVE THEIR PRODUCTION, MESSRS. NUOVA FIMA RESERVE THE RIGHT TO THEMSELVES TO MAKE ALL THE MODIFICATIONS THAT THEY DEEM INDISPENSABLE AT ANY TIME. UPDATED DATA-SHEETS ARE AVAILABLE ON SITE: www.nuovafima.com

Copyright © Nuova Fima srl. All rights reserved. Any part of this publication should not be reproduced without a written Nuova Fima's srl approval

NUOVA FIMA USA Inc.
www.nuovafima.com - e-mail: infousa@nuovafima.com
4123 Hollister, Suite G - TX 77080 Houston
TEL. +1 713.690.9800 - FAX +1 713.690.9803

NUOVA FIMA srl
www.nuovafima.com - e-mail: info@nuovafima.com
P.O. BOX 58 - VIA C. BATTISTI 59 - 28045 INVORIO (NO) ITALY
TEL. +39 0322 253200 - FAX +39 0322 253232

MGS9/AL

clamp connection
diaphragm seal

74-06
Autorization NO. 1599

Diaphragm seals are designed to isolate the sensing element of pressure gauges and pressure switches from process fluids that may be corrosive, viscous, sedimentous and/or with a high temperature. The diaphragm is welded to the upper body, to ensure separation of the filling fluid from the process medium. Faced diaphragm position enables deep cleaning of the surface while the quick-connection Clamp enables frequent removal from the process during sterilization and cleaning operations, a common requirement in the food processing industry.

4.ALI.4.---- - MGS9/AL

Design: 74-06 SSI.
Working pressure: *from 0...15 to 0...600 psi* (from 0...1 to 0...40 bar), as from RANGE table .
Process temperature: *-4...+212°F* (-20°C...+100°C);
Max *284°F* (140 °C) for 30 minutes during cleaning stage (C.I.P.) [1] and sterilization (S.I.P) [2].
Accuracy [3]**:** (add to instrument accuracy) ±0,5% max for direct mounting.
Diaphragm: welded, **4** - AISI 316L st.st.
Process connection : 4 - AISI 316 st.st. with finishing Ra ≤0,76 µm (welded parts included), as per ASME BPE SF3.
Filling liquid: mineral oil (FDA approved)for food industry.

4.ALI.4.TA3- - MGS9/AL - 150°C

Process temperature: *-4...+302°F* (-20°C...+150°C)
Other features: as Standard Model.

1) C.I.P. = Cleaned In Place
2) S.I.P. = Steamed In Place - available for ranges > 1bar when steam pressure does not exceed the max admissible pressure on the connected instrument
3) at *+68°F* (20 °C) process fluid temperature, or state temperature when ordering.

RANGES (1)

Pressure gauges DS	1" Clamp	1" 1/2 Clamp	2" Clamp	2" 1/2 Clamp	3" Clamp
2.5" (63mm)	*0...100/0...600 psi* (0...6/0...40 bar)	*0...60/0...600 psi* (0...4/0...40 bar)			
4" (100mm)		*0...60/0...600 psi* (0...4/0...40 bar)	*0...30/0...600 psi* (0...1,6/0...40 bar)	*0...15/0...600 psi* (0...1/0...40 bar)	*0...15/0...400 psi* (0...1/0...25 bar)
6" (150mm)		*0...100/0...600 psi* (0...6/0...40 bar)	*0...30/0...600 psi* (0...2,5/0...40 bar)	*0...30/0...600 psi* (0...1,6/0...40 bar)	*0...30/0...400 psi* (0...1,6/0...25 bar)

(1) Vacuum and compound are available upon request

MGS9/AL - STD
cod. ----

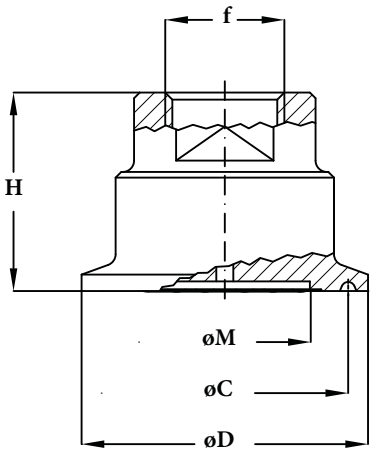

MGS9/AL - 150°C
cod. TA3-

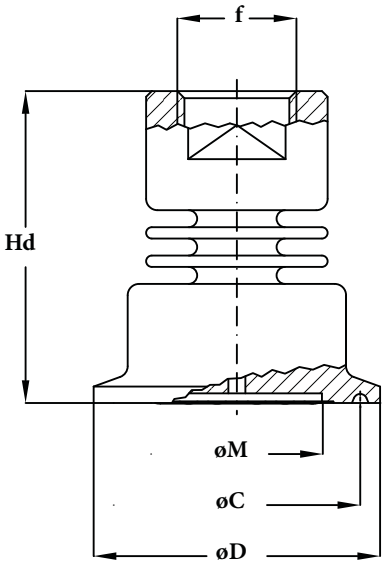

DN Clamp	Code	C	H	Hd	D	f	M
1"	6T-	*1,71"*	*1,18"*	*1,18"*	*1,98"*	21F - G 1/4 A	*0,78"*
1" 1/2	AT-	*1,71"*	*1,37"*	*1,37"*	*1,98"*	21F - G 1/4 A 41F - G 1/2 A	*1,18"*
2"	BT-	*2,22"*	*1,37"*	*1,37"*	*2,51"*	41F - G 1/2 A	*1,57"*
2" 1/2	DT-	*2,77"*	*1,37"*	*1,37"*	*3,05"*	41F - G 1/2 A	*1,96"*
3"	ET-	*3,29"*	*1,37"*	*1,37"*	*3,58"*	41F - G 1/2 A	*2,56"*

dimensions : *inches*

ASSEMBLING

D - All diaphragm seals are mounted directly on the instruments.
All diaphragm seals are mounted on the instruments and fixed by an aluminium protection label.

FINISHING

0 -	Ra ≤0,76 µm, as per ASME BPE SF1	(1)
A -	Ra ≤0,51 µm, as per ASME BPE SF1	(1)
B -	Ra ≤0,38 µm, as per ASME BPE SF4 - electropolished	(1)

(1) welded parts included

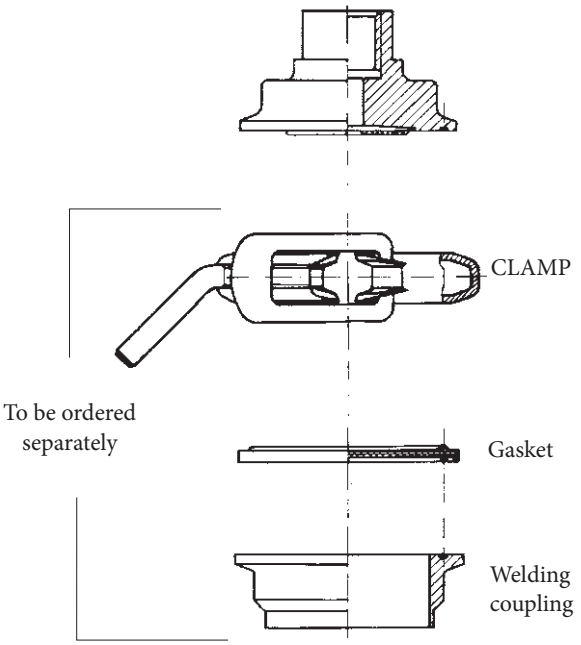

OPTIONS

C05 -	Helium Test
P04 -	Dye penetrant test

"HOW TO ORDER" SEQUENCE

Section/Model/Connection material/Version/Diaphragm material/Process Connection/Finishing/Instrument connection/Assembling/Options

4	ALI	4	----	4	6T-...ET-	0	21F - G 1/4 F	D	C05...P04
			TA3-			A	41F - G 1/2 F		
						B			

Copyright © Nuova Fima srl. All rights reserved. Any part of this publication should not be reproduced without a written Nuova Fima's srl approval

NUOVA FIMA USA Inc.
www.nuovafima.com - e-mail: infousa@nuovafima.com
4123 Hollister, Suite G - TX 77080 Houston
TEL. +1 713.690.9800 - FAX +1 713.690.9803

NUOVA FIMA srl
www.nuovafima.com - e-mail: info@nuovafima.com
P.O. BOX 58 - VIA C. BATTISTI 59 - 28045 INVORIO (NO) ITALY
TEL. +39 0322 253200 - FAX +39 0322 253232

RG - 02/16

IN ORDER TO IMPROVE THEIR PRODUCTION, MESSRS. NUOVA FIMA RESERVE THE RIGHT TO THEMSELVES TO MAKE ALL THE MODIFICATIONS THAT THEY DEEM INDISPENSABLE AT ANY TIME. UPDATED DATA SHEETS ARE AVAILABLE ON SITE: www.nuovafima.com

MGS9/367

diaphragm seal for DS 2.5" (63mm) pressure gauges, with threaded connection

Diaphragm seals are designed to isolate the sensing element of pressure gauges DS 63 and electronic transmitter from process fluids which may be corrosive, viscous, sedimentous and/or with a high temperature. The diaphragm is welded to the top housing and leak proof tested, to guarantee a separation between process fluid and fill transmission fluid. This construction feature and its compact design suits many application that require frequent maintenance.

4.367 - MGS9/367

Working pressure : *from 0...600 to 0...6000 psi* (from 0...40 to 0...400 bar).
Process temperature: *-49...+302°F* (-45°C...+150°C).
Accuracy*: (add to instrument accuracy) ±1% for direct mounting only.
Diaphragm: welded,
4 - AISI 316 L st.st.
Process connection:
4 - AISI 316 st.st.
Filling liquid: silicone oil.

* at *68°F* (20 °C) process temperature (or state temperature when ordering)

diaphragm seal for DS 2.5" (63mm) pressure gauges, with threaded connection

MGS9/367

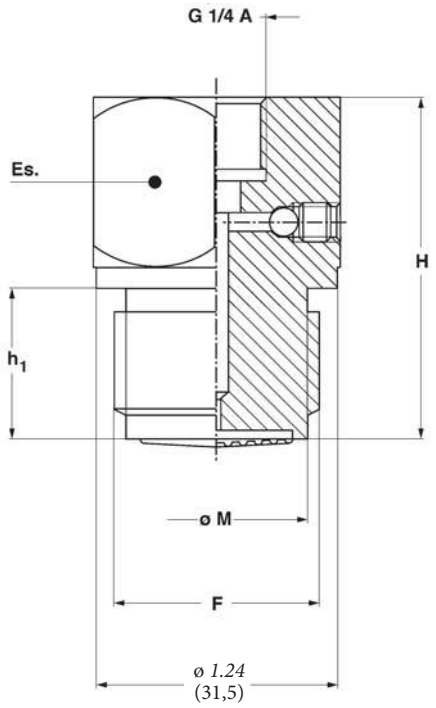

F	M	h_1	H	Es.
51M G 3/4 M	*0.92"* (23,5)	*0.62"* (16)	*1.43"* (36,5)	*1.25"* (32)

dimensions : *inches* (mm)

ASSEMBLING

D - All diaphragm seals are mounted directly on the instruments.

All diaphragm seals are mounted on the instruments ad fixed by an aluminium protection label.

FILLING FLUIDS and process fluid temperature

Fluid	Vacuum	Pressure	Fluid	Vacuum	Pressure
Standard silicon oil	*-40...+122°F* (-40...+100°C)	*-40...+302°F* (-40...+150°C)	**E** - Fluorinated liquid "E"	*-40...+212°F* (-40...+100°C)	*-40...+302°F* (-40...+150°C)
B - Silicon oil "B"	*-40...+302°F* (-40...+150°C)	*-40...+482°F* (-40...+250°C)	**F** - Silicon oil"C"	*-130...+176°F* (-90...+80°C)	*-130...+302°F* (-90...+150°C)
C - Silicon oil"C"	*-14...+392°F* (-10...+200°C)	*-14...+662°F* (-10...+350°C)	**G** - Mineral food oil "G"	*-14...+302F* (-10...+150°C)	*-14...+392°F* (-10...+200°C)
D - Silicon oil"D"	*-14...+392°F* (-10...+200°C)	*-14...+752°F* (-10...+400°C)			

OPTIONS

C05 -	Helium Test
P04 -	Dye penetrant test

"HOW TO ORDER" SEQUENCE

Section/Model/Connection material/Diaphragm material/Process Connection/Instrument connection/Assembling/Options

4	367	4	4	51M	21F - G 1/4 F	D	B...G C05, P04

Copyright © Nuova Fima srl. All rights reserved. Any part of this publication should not be reproduced without a written Nuova Fima's srl approval

NUOVA FIMA USA Inc.
www.nuovafima.com - e-mail: infousa@nuovafima.com
4123 Hollister, Suite G - TX 77080 Houston
TEL. +1 713.690.9800 - FAX +1 713.690.9803

NUOVA FIMA srl
www.nuovafima.com - e-mail: info@nuovafima.com
P.O. BOX 58 - VIA C. BATTISTI 59 - 28045 INVORIO (NO) ITALY
TEL. +39 0322 253200 - FAX +39 0322 253232

RG5 - 08/14

IN ORDER TO IMPROVE THEIR PRODUCTION, MESSRS. NUOVA FIMA RESERVE THE RIGHT TO THEMSELVES TO MAKE ALL THE MODIFICATIONS THAT THEY DEEM INDISPENSABLE AT ANY TIME. UPDATED DATA-SHEETS ARE AVAILABLE ON SITE: www.nuovafima.com

MGS9/3A

back side diaphragm seals, with flanged connection

Diaphragm seals are designed to isolate the sensing element of pressure gauges and pressure switches from process fluids which may be corrosive, viscous, sedimentous and/or with a high temperature and pressure. An elastic diaphragm, mechanically clamped, fitted to a leak proof check, guarantees the separation of the process fluid from the transmission fill fluid. The mechanical sealing of the diaphragm guarantees the application of the system at high process fluid temperature avoiding the problems caused by gaskets.

4.3A0 - MGS9/3A

Working pressure: *from 0...1000 to 3000 psi* (from 0...60 bar to 0...250 bar).

Working temperature: *-49...+302°F* (-45°C...+150°C.)

Accuracy*: (add to instrument accuracy) ±0,5% for direct mounting; ± 1% for capillary mounting.

Instrument connection: AISI 316 st.st.

Diaphragm: welded, AISI 316L st.st. (cod. **4**), Monel 400 (cod. **6**), Hastelloy C276 (cod. **9**), Hastelloy B2 (cod. **1**), Tantalum (cod. **B**), Titanium (cod. **2**).

Threaded process connection: in AISI 316 st.st. (cod. **4**), AISI 316L st.st. (cod. **5**).

* at *+68°F* (20 °C) process temperature (or state when ordering)

Dimensions : DN 15...25 and PN 25...100 EN 1092 step seal; 1/2"...1"1/2 class 600...2500 RF as per ASME B16.5.

EN 1092 flanges finishing: type B1 (PN 2,5...40) = Ra 3,2...12,5 µm (cod. **RF7**); type B2 (PN 63...100) = Ra 0,8...3,2 µm (cod. **RF8**).

ASME flanges finishing: type RF = Ra 125...250 AARH (cod. **RF3**).

Filling liquid: silicon oil.

Fixing bolts: AISI 304 st.st.

ASSEMBLING

All diaphragm seals are mounted on the instruments ad fixed by an aluminium protection label. For applications with capillary: shoul diaphragm seal and instrument not be at the same level, instrument adjustment is required). (For use and installation, see data sheet "4")

D - Direct	**9** - Capillary AISI304 st.st., AISI304 st.st. armoured, *36.37" max* (6 mt max)
1 - Nude capillary AISI304, *36.37" max* (6 mt max)	**6** - Capillary AISI316 st.st., AISI316 st.st. armoured, *36.37" max* (6 mt max)

FILLING FLUIDS and process fluid temperature

Fluid	Vacuum	Pressure	Fluid	Vacuum	Pressure
Standard silicon oil	*-40...+122°F* (-40...+100°C)	*-40...+302°F* (-40...+150°C)	**E** - Fluorinated liquid "E"	*-40...+212°F* (-40...+100°C)	*-40...+302°F* (-40...+150°C)
B - Silicon oil "B"	*-40...+302°F* (-40...+150°C)	*-40...+482°F* (-40...+250°C)	**F** - Silicon oil"C"	*-130...+176°F* (-90...+80°C)	*-130...+302°F* (-90...+150°C)
C - Silicon oil"C"	*-14...+392°F* (-10...+200°C)	*-14...+662°F* (-10...+350°C)	**G** - Mineral food oil "G"	*-14...+302F* (-10...+150°C)	*-14...+392°F* (-10...+200°C)
D - Silicon oil"D"	*-14...+392°F* (-10...+200°C)	*-14...+752°F* (-10...+400°C)			

OPTIONS

R20 - Adaptor G 1/2 A M/F with filling screw	**R21** - Adaptor G 1/2 A M x 1/4 - 18 NPT F with filling screw
E30 - Nace MR0103 version, with Monel 400 or Hastelloy C diaphragm.	

RS - 08/14

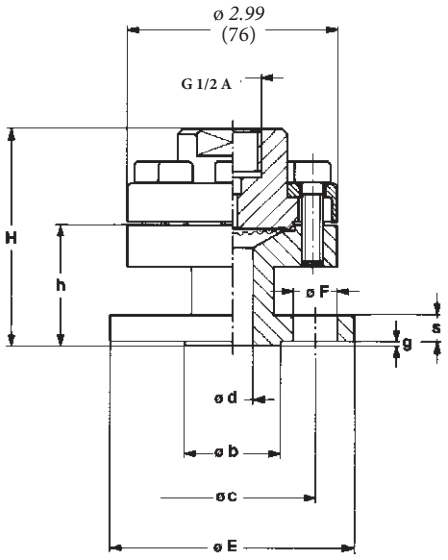

EN 1092 STANDARD

dimensions : mm

DN	PN-bar	Code	h	H	E	b	d	g	c	s	F	N (1)
15	25...40	OS0	47	82,5	95	45	15	2	65	14	14	4
15	63...100	OU0	51	86,5	105	45	15	2	75	18	14	4
20	25...40	PS0	49	84,5	105	58	20	2	75	16	14	4
20	63...100	PU0	57	92,5	130	58	20	2	90	20	18	4
25	25...40	QS0	49	84,5	115	68	25	2	85	16	14	4
25	63...100	QU0	59	94,5	140	68	25	2	100	22	18	4

1) N°holes.

ASME STANDARDS

dimensions : *inches*

DN	Classe	Code	h	H	E	b	d	g	c	s	F	N (1)
1/2"	600	4DA	2,11"	3,51"	3,74"	1,37"	0,59"	0,24"	2,62"	0,57"	0,62"	4
1/2"	900...1500	4FA	2,70"	4,10"	4,74"	1,37"	0,59"	0,24"	3,24"	0,88"	0,86"	4
3/4"	600	5DA	2,33"	3,73"	4,62"	1,68"	0,78"	0,24"	3,24"	0,62"	0,74"	4
3/4"	900...1500	5FA	2,82"	4,22"	5,11"	1,68"	0,78"	0,24"	3,5"	1,04"	0,86"	4
3/4"	2500	5GA	3,08"	4,48"	5,49"	1,68"	0,78"	0,24"	3,74"	1,25"	0,86"	4
1"	600	6DA	2,39"	3,79"	4,88"	2"	0,98"	0,24"	3,5"	0,68"	0,74"	4
1"	900...1500	6FA	3,10"	4,5"	5,86"	2"	0,98"	0,24"	4"	1,12"	1,02"	4
1"	2500	6GA	3,35"	4,75"	6,24"	2"	0,98"	0,24"	4,24"	1,37"	1,02"	4
1" 1/2	600	ADA	1,72"	3,12"	6,12"	2,87"	1,57"	0,24"	4,5"	0,88"	0,86"	4
1" 1/2	900...1500	AFA	2,09"	3,49"	7"	2,87"	1,57"	0,24"	4,87"	1,25"	1,14"	4
1" 1/2	2500	AGA	2,59"	3,98"	7,99"	2,87"	1,57"	0,24"	5,74"	1,75"	1,25"	4

1) N°holes.

"HOW TO ORDER" SEQUENCE

Section	/ Model material	/ Connection material	/ Diaphragm connection	/ Process	/ Flange finishing	/ Instrument connection	/ Assembling	/ Options
4	3A0	4, 5	4, 6, 9 2, B, 1	OS0...QU0 4DA...AGA	RF3...RF8	41F - G 1/2 F	D 1, 9, 6	B...G R20...E30

IN ORDER TO IMPROVE THEIR PRODUCTION, MESSRS. NUOVA FIMA RESERVE THE RIGHT TO THEMSELVES TO MAKE ALL THE MODIFICATIONS THAT THEY DEEM INDISPENSABLE AT ANY TIME. UPDATED DATA-SHEETS ARE AVAILABLE ON SITE: www.nuovafima.com

Copyright © Nuova Fima srl. All rights reserved. Any part of this publication should not be reproduced without a written Nuova Fima's srl approval

NUOVA FIMA USA Inc.
www.nuovafima.com - e-mail: infousa@nuovafima.com
4123 Hollister, Suite G - TX 77080 Houston
TEL. +1 713.690.9800 - FAX +1 713.690.9803

NUOVA FIMA srl
www.nuovafima.com - e-mail: info@nuovafima.com
P.O. BOX 58 - VIA C. BATTISTI 59 - 28045 INVORIO (NO) ITALY
TEL. +39 0322 253200 - FAX +39 0322 253232

MGS9/3B

back side diaphragm seals, with flanged connection

Diaphragm seals are designed to isolate the sensing element of pressure gauges and pressure switches from process fluids which may be corrosive, viscous, sedimentous and/or with a high temperature and pressure. An elastic diaphragm, mechanically clamped, fitted to a leak proof check, guarantees the separation of the process fluid from the transmission fill fluid.

4.3B0 - MGS9/3B

Instrument type	Minimum range	Maximum range	Notes
Bourdon tube, DS 4", 6" (100...150 mm)	*0...10 psi* (0...0,6 bar)	*0...580 psi* (0...40 bar)	Vacuum and compound gauges included
Diaphragm differential pressure gauges	*0...100 InH_2O* (0...250 mbar)	*0...360 psi* (0...25 bar)	Max static pressure 60 bar
Diaphragm pressure switches	*0...15 psi* (0...15 bar)	*0...580 psi* (0...40 bar)	Vacuum and compound gauges included
Pressure transmitters	*0...40 InH_2O* (0...100 mbar)	*0...580 psi* (0...40 bar)	Max static pressure 60 bar

Working temperature: *-49...+302°F* (-45°C...+150°C.)

Accuracy*: (add to instrument accuracy) ±0,5% for direct mounting; ± 1% for capillary mounting.

Instrument connection: AISI 304 st.st.

Diaphragm: AISI 316L st.st. (cod. **4**), Monel 400 (cod. **6**), Hastelloy C276 (cod. **9**), Tantalum (cod. **B**), Titanium (cod. **2**) and AISI 316L st.st. PTFE coated (cod. **8**)**.

Gaskets: PTFE (max. 250°C).

Threaded process connection: in AISI 316 st.st. (cod. **4**), AISI 316L st.st. (cod. **5**), AISI 316L st.st. PTFE coated (cod. **N**)**.

Dimensions : DN 15...50 and PN 6...40 EN 1092 step seal; 1/2"...2" class 150...600 RF as per ASME B16.5.

EN 1092 flanges finishing: type B1 (PN 2,5...40) = Ra 3,2...12,5 µm (cod. **RF7**); type B2 (PN 63...100) = Ra 0,8...3,2 µm (cod. **RF8**).

ASME flanges finishing: type RF = Ra 125...250 AARH (cod. **RF3**).**EN 1092 flanges finishing:** type B1 (PN 2,5...40) = Ra 3,2...12,5 µm (cod. **RF7**); type B2 (PN 63...100) = Ra 0,8...3,2 µm (cod. **RF8**).

ASME flanges finishing: type RF = Ra 125...250 AARH (cod. **RF3**).

Filling liquid: silicon oil.

Fixing bolts: AISI 304 st.st.

* at *+68°F* (20 °C) process temperature (or state when ordering)

** max temperature *+328°F* (+150°C), with PTFE coating

ASSEMBLING

All diaphragm seals are mounted on the instruments ad fixed by an aluminium protection label. For applications with capillary: shoul diaphragm seal and instrument not be at the same level, instrument adjustment is required). (For use and installation, see data sheet "4")

D - Direct	**9** - Capillary AISI304 st.st., AISI304 st.st. armoured, *36.37" max* (6 mt max)
1 - Nude capillary AISI304, *36.37" max* (6 mt max)	**6** - Capillary AISI316 st.st., AISI316 st.st. armoured, *36.37" max* (6 mt max)

FILLING FLUIDS and process fluid temperature

Fluid	Vacuum	Pressure	Fluid	Vacuum	Pressure
Standard silicon oil	*-40...+122°F* (-40...+100°C)	*-40...+302°F* (-40...+150°C)	**E** - Fluorinated liquid "E"	*-40...+212°F* (-40...+100°C)	*-40...+302°F* (-40...+150°C)
B - Silicon oil "B"	*-40...+302°F* (-40...+150°C)	*-40...+482°F* (-40...+250°C)	**F** - Silicon oil"C"	*-130...+176°F* (-90...+80°C)	*-130...+302°F* (-90...+150°C)
C - Silicon oil"C"	*-14...+392°F* (-10...+200°C)	*-14...+662°F* (-10...+350°C)	**G** - Mineral food oil "G"	*-14...+302F* (-10...+150°C)	*-14...+392°F* (-10...+200°C)
D - Silicon oil"D"	*-14...+392°F* (-10...+200°C)	*-14...+752°F* (-10...+400°C)			

OPTIONS

C05 - Helium Test (1)	**TS4** - Washing plug (1)
E30 - Nace version bMR0103 (2) - MR0175 (ISO 15156) (3)	

(1) available only on some executions: contact our Technical Department.

(2) Monel 400 or Hastelloy C diaphragm.

(3) Hastelloy C process connection and diaphragm.

back side diaphragm seals with flanged connection

MGS9/3B

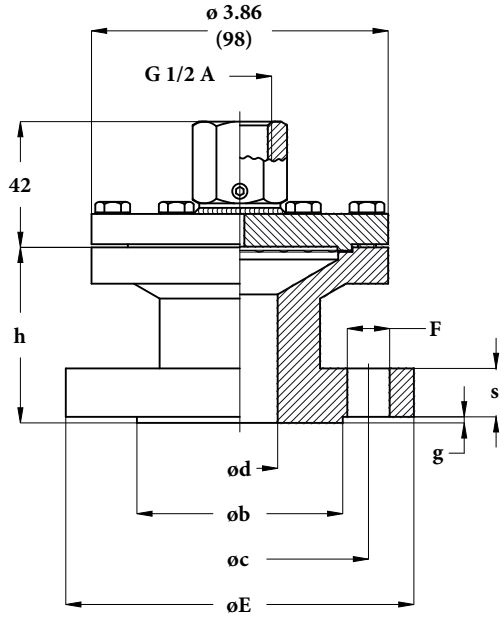

EN 1092 STANDARD

dimensions : mm

DN (1)	PN-bar	Code	h	E	b	d	g	c	s	F	N (2)
15	6	OO0	48	80	40	15	2	55	12	11	4
15	10÷16	OQ0	52	95	45	15	2	65	14	14	4
15	25÷40	OS0	52	95	45	15	2	65	14	14	4
25	6	QO0	50	100	60	25	2	75	14	11	4
25	10÷16	QQ0	54	115	68	25	2	85	16	14	4
25	25÷40	QS0	54	115	68	25	2	85	16	14	4
50	6	TO0	54	140	90	50	2	110	16	14	4
50	10÷16	TQ0	61	165	102	50	2	125	19	18	4
50	25÷40	TS0	62	165	102	50	2	125	20	18	4

1) DN 20, 40 and over are available

2) N°holes.

ASME STANDARDS

dimensions : *inches*

DN (1)	Classe	Code	h	E	b	d	g	c	s	F	N (2)
1/2"	150	4AA	*1.89"*	*3.54"*	*1.37"*	*0.59"*	*0.08"*	*2.37"*	*0.38"*	*0.63"*	4
1/2"	300	4BA	*2.11"*	*3.74"*	*1.37"*	*0.59"*	*0.08"*	*2.62"*	*0.50"*	*0.63"*	4
1/2"	600	4DA	*2.37"*	*3.74"*	*1.37"*	*0.59"*	*0.27"*	*2.62"*	*0.56"*	*0.63"*	4
1"	150	6AA	*2.01"*	*4.33"*	*2"*	*0.98"*	*0.08"*	*3.12"*	*0.50"*	*0.63"*	4
1"	300	6BA	*2.38"*	*4.88"*	*2"*	*0.98"*	*0.08"*	*3.5"*	*0.62"*	*0.75"*	4
1"	600	6DA	*2.64"*	*4.88"*	*2"*	*0.98"*	*0.27"*	*3.5"*	*0.69"*	*0.75"*	4
2"	150	BAA	*2.20"*	*6"*	*3.62"*	*1.96"*	*0.08"*	*4.75"*	*0.69"*	*0.75"*	4
2"	300	BBA	*2.37"*	*6.49"*	*3.62"*	*1.96"*	*0.08"*	*5"*	*0.81"*	*0.75"*	8
2"	600	BDA	*2.75"*	*6.49"*	*3.62"*	*1.96"*	*0.27"*	*5"*	*1"*	*0.75"*	8

1) 3/4", 1"1/2 and over are available

2) N°holes.

"HOW TO ORDER" SEQUENCE

Section	/ Model material	/ Connection material	/ Diaphragm	/ Process connection	/ Flange finishing	/ Instrument connection	/ Assembling	/ Options
4	3B0	4, 5, N	4, 6, 9 B, 2, 8	OO0...TS0 4AA...BDA	RF3...RF8	41F - G 1/2 F	D 1, 9, 6	B...G C05...E30

Copyright © Nuova Fima srl. All rights reserved. Any part of this publication should not be reproduced without a written Nuova Fima's srl approval

NUOVA FIMA USA Inc.
www.nuovafima.com - e-mail: infousa@nuovafima.com
4123 Hollister, Suite G - TX 77080 Houston
TEL. +1 713.690.9800 - FAX +1 713.690.9803

NUOVA FIMA srl
www.nuovafima.com - e-mail: info@nuovafima.com
P.O. BOX 58 - VIA C. BATTISTI 59 - 28045 INVORIO (NO) ITALY
TEL. +39 0322 253200 - FAX +39 0322 253232

RC5 - 08/14

IN ORDER TO IMPROVE THEIR PRODUCTION, MESSRS. NUOVA FIMA RESERVE THE RIGHT TO THEMSELVES TO MAKE ALL THE MODIFICATIONS THAT THEY DEEM INDISPENSABLE AT ANY TIME. UPDATED DATA-SHEETS ARE AVAILABLE ON SITE: www.nuovafima.com

MGS9/6

back side diaphragm seals, with flanged connection

Diaphragm seals are designed to isolate the sensing element of pressure gauges, pressure switches and electronic pressure transmitter from process fluids which may be corrosive, viscous, sedimentous and/or with a high temperature. The diaphragm is leak proof tested to guarantee fill fluid separation from process fluid. Process side are ASME/EN 1092 flanged to suit application in chemical, petrochemical, water treatment and paper industries.

4.600 - MGS9/6

Instrument type	Minimum range	Maximum range	Notes
Bourdon tube, DS 4", 6" (100...150 mm)	*0...10 psi* (0...0,6 bar)	*0...580 psi* (0...40 bar)	Vacuum and compound gauges included
Diaphragm differential pressure gauges	*0...100 InH_2O* (0...250 mbar)	*0...360 psi* (0...25 bar)	Max static pressure 60 bar
Diaphragm pressure switches	*0...15 psi* (0...15 bar)	*0...580 psi* (0...40 bar)	Vacuum and compound gauges included
Pressure transmitters	*0...40 InH_2O* (0...100 mbar)	*0...580 psi* (0...40 bar)	Max static pressure 60 bar

Working temperature: *-49...+302°F* (-45°C...+150°C.)

Accuracy*: (add to instrument accuracy) ±0,5% for direct mounting; ± 1% for capillary mounting.

Instrument connection: AISI 316 st.st .

Diaphragm: AISI 316L st.st. (cod. **4**), Monel 400 (cod. **6**), Hastelloy C276 (cod. **9**), Tantalum (cod. **B**), Titanium (cod. **2**) and AISI 316L st.st. PTFE coated (cod. **8**)**.

Gaskets: PTFE (max. 250°C).

Flanged process connection: in AISI 316 st.st. (cod. **4**), AISI 316L st.st. (cod. **5**), AISI 316L st.st. PTFE coated (cod. **N**)**.

Dimensions: DN 15...50, PN 6...40 EN 1092 step seal; 1/2"...2" class 150...600 RF as per ASME B16.5.

EN 1092 flanges finishing: type B1 (PN 2,5...40) = Ra 3,2...12,5 µm (cod. **RF7**); type B2 (PN 63...100) = Ra 0,8...3,2 µm (cod. **RF8**).

ASME flanges finishing: type RF = Ra 125...250 AARH (cod. **RF3**).

Filling liquid: silicon oil.

Studs, nuts: AISI 304 st.st.

* at *+68°F* (20 °C) process temperature (or state when ordering)

** max. temperature *328°F* (150 °C), with PTFE coating.

ASSEMBLING

All diaphragm seals are mounted on the instruments ad fixed by an aluminium protection label. For applications with capillary: shoul diaphragm seal and instrument not be at the same level, instrument adjustment is required). (For use and installation, see data sheet "4")

D - Direct	**9** - Capillary AISI304 st.st., AISI304 st.st. armoured, *36.37" max* (6 mt max)
1 - Nude capillary AISI304, *36.37" max* (6 mt max)	**6** - Capillary AISI316 st.st., AISI316 st.st. armoured, *36.37" max* (6 mt max)

FILLING FLUIDS and process fluid temperature

Fluid	Vacuum	Pressure	Fluid	Vacuum	Pressure
Standard silicon oil	*-40...+122°F* (-40...+100°C)	*-40...+302°F* (-40...+150°C)	**E** - Fluorinated liquid "E"	*-40...+212°F* (-40...+100°C)	*-40...+302°F* (-40...+150°C)
B - Silicon oil "B"	*-40...+302°F* (-40...+150°C)	*-40...+482°F* (-40...+250°C)	**F** - Silicon oil"C"	*-130...+176°F* (-90...+80°C)	*-130...+302°F* (-90...+150°C)
C - Silicon oil"C"	*-14...+392°F* (-10...+200°C)	*-14...+662°F* (-10...+350°C)	**G** - Mineral food oil "G"	*-14...+302F* (-10...+150°C)	*-14...+392°F* (-10...+200°C)
D - Silicon oil"D"	*-14...+392°F* (-10...+200°C)	*-14...+752°F* (-10...+400°C)			

OPTIONS

C05 - Helium Test (1)	**P15** - Studs, nuts and washers
E30 - Nace version bMR0103 (2) - MR0175 (ISO 15156) (3)	**TS4** - Washing plug (1)

(1) available only on some executions: contact our Technical Department.

(2) Monel 400 or Hastelloy C diaphragm.

(3) Hastelloy C process connection and diaphragm.

RG6 - 08/14

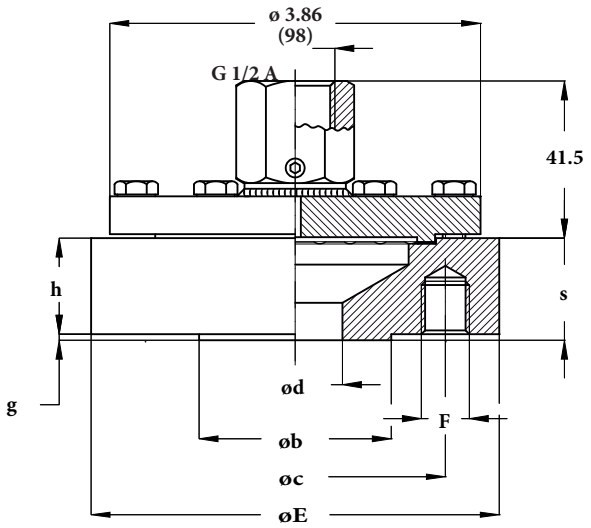

EN 1092 STANDARD

dimensions : mm

DN (1)	PN	Code	E	h	b	d	g	c	s	F	N (1)
15	10...16	OQ0	95	24,5	45	15	2	65	26,5	M12	4
	25...40	OS0									
20	10...16	PQ0	105	22,5	58	20	2	75	24,5	M12	4
	25...40	PS0									
25	10...16	QQ0	115	20,5	68	25	2	85	22,5	M12	4
	25...40	QS0									
40	10...16	SQ0	150	18	88	40	3	110	21	M16	4
	25...40	SS0									
50	10...16	TQ0	165	18	102	50	3	125	21	M16	4
	25...40	TS0									

1) DN20 and over DN50 are available

2) N° holes

ASME STANDARDS

dimensions : *inches*

DN (1)	Class	Code	h	E	b	d	g	c	s	N (1)	F
1/2"	150	4AA	*1.06"*	*3.54"*	*1.37"*	*0.59"*	*0.08"*	*2.37"*	*1.14"*	4	1/2"-13UNC
1/2"	300	4BA	*1"*	*3.74"*	*1.37"*	*0.59"*	*0.08"*	*2.63"*	*1.08"*	4	1/2"-13UNC
1/2"	600	4DA	*1"*	*3.74"*	*1.37"*	*0.59"*	*0.27"*	*2.63"*	*1.28"*	4	1/2"-13UNC
3/4"	150	5AA	*0.98"*	*3.94"*	*1.69"*	*0.79"*	*0.08"*	*2.75"*	*1.14"*	4	1/2"-13UNC
3/4"	300	5BA	*1.34"*	*4.53"*	*1.69"*	*0.79"*	*0.08"*	*2.63"*	*1.06"*	4	5/8"-11UNC
3/4"	600	5DA	*1.34"*	*4.53"*	*1.69"*	*0.79"*	*0.27"*	*3.25"*	*1.61"*	4	5/8"-11UNC
1"	150	6AA	*0.9"*	*4.33"*	*2"*	*0.98"*	*0.08"*	*3.25"*	*0.98"*	4	1/2"-13UNC
1"	300	6BA	*1.34"*	*4.92"*	*2"*	*0.98"*	*0.08"*	*3.5"*	*1.42"*	4	5/8"-11UNC
1"	600	6DA	*1.34"*	*4.92"*	*2"*	*0.98"*	*0.27"*	*3.5"*	*1.61"*	4	5/8"- 11UNC
1"1/2	150	AAA	*0.69"*	*4.92"*	*2.87"*	*1.57"*	*0.08"*	*3.87"*	*0.77"*	4	1/2"-13UNC
1"1/2	300	ABA	*0.83"*	*6.1"*	*2.87"*	*1.57"*	*0.08"*	*4.5"*	*0.9"*	4	3/4"-10UNC
1"1/2	600	ADA	*0.88"*	*6.1"*	*2.87"*	*1.57"*	*0.27"*	*4.5"*	*1.17"*	4	3/4"-10UNC
2"	150	BAA	*0.69"*	*5.9"*	*3.63"*	*1.97"*	*0.08"*	*4.75"*	*0.77"*	4	5/8"-11UNC
2"	300	BBA	*0.81"*	*6.5"*	*3.63"*	*1.97"*	*0.08"*	*5"*	*0.89"*	8	5/8"-11UNC
2"	600	BDA	*1"*	*6.5"*	*3.63"*	*1.97"*	*0.27"*	*5"*	*1.28"*	8	5/8"-11UNC

1) 3/4" is available

2) Nr. holes

"HOW TO ORDER" SEQUENCE

Section	/ Model material	/ Connection material	/ Diaphragm	/ Process connection	/ Flange finishing	/ Instrument connection	/ Assembling	/ Options
4	600	4, 5, N	4, 6, 9 B, 2, 8	OO0...TS0 4AA...BDA	RF3...RF8	41F - G 1/2 F	D 1, 9, 6	B...G C05...TS4

Copyright © Nuova Fima srl. All rights reserved. Any part of this publication should not be reproduced without a written Nuova Fima's srl approval

IN ORDER TO IMPROVE THEIR PRODUCTION, MESSRS. NUOVA FIMA RESERVE THE RIGHT TO THEMSELVES TO MAKE ALL THE MODIFICATIONS THAT THEY DEEM INDISPENSABLE AT ANY TIME. UPDATED DATA-SHEETS ARE AVAILABLE ON SITE: www.nuovafima.com

NUOVA FIMA USA Inc.
www.nuovafima.com - e-mail: infousa@nuovafima.com
4123 Hollister, Suite G - TX 77080 Houston
TEL. +1 713.690.9800 - FAX +1 713.690.9803

NUOVA FIMA srl
www.nuovafima.com - e-mail: info@nuovafima.com
P.O. BOX 58 - VIA C. BATTISTI 59 - 28045 INVORIO (NO) ITALY
TEL. +39 0322 253200 - FAX +39 0322 253232

"continuous duty" diaphragm seal, welded, with flanged connection

Diaphragm seals are designed to isolate the sensing element of pressure gauges, pressure switches and electronic pressure transmitter from process fluids which may be corrosive, viscous, sedimentous and/or with a high temperature. "Continuous duty" version as per ASME B40.2 : in case of accidental removal of the instrument or of liquid filling leak the diaphragm will place on the upper cup preventing any damage and any process liquid leak. Thanks to an exclusive calibration system the pressure gauge should stand an overpressure of 210 bar without the help of any pressure control switch. Process side are ASME/EN 1092 flanged to suit application in chemical, petrochemical, water treatment and paper industries.

4.700 - MGS9/7

Pressure gauge ranges: *from -30...0 INHG to 0...2320 psi* (from -1...0 to 0...160 bar) [1].

Filling liquid: silicon oil (see "Options" table).

Process fluid max temperature: as per filling liquid (see "Options" table).

Accuracy: (add to instrument accuracy) ±0,5% for direct mounting; ± 1% for capillary mounting [2].

Instrument connection: AISI 304 st.st .

Membrana saldata in: AISI 316L st.st. (code **4**), Monel 400 (code **6**), Hastelloy C276 (code **9**), Tantaluum (code **B**), Alloy 600 (code **J**), Alloy 825 (code **I**), 25.22.2 (code **U**).

Gasket: PTFE (max. *+482°F*; +250°C);

Flanged process connection: AISI 316L st.st (cod. **4**), AISI 316L st.st (cod. **5**), Monel 400 (cod. **6**), Hastelloy C276 (cod. **9**), Hastelloy B2 (cod. **1**); other materials available on request.

Dimensions [3]**:** DN 15...50, PN 10...160 EN 1092-1 type B; 1/2"...2" class 150...1500 RF as per ASME B16.5.

Finishing: EN B1 type: Ra 3,2...12,5 ASME RF type: Ra 125...250 AARH (code **RF3**).

Bolts: AISI304 st.st., for flange PN ≤ 100 or class ≤ 600; high resistance steel for flange PN > 100 or class > 600.

(1) Working pressure must be less or equal to the flange rating
(2) at 68°F (20 °C) process temperature (or state temperature when ordering)
(3) other dimensions and finishing are available on request

ASSEMBLING

All diaphragm seals are mounted on the instruments ad fixed by an aluminium protection label. For applications with capillary: shoul diaphragm seal and instrument not be at the same level, instrument adjustment is required). (For use and installation, see data sheet "4")

D - Direct	**9** - Capillary AISI304 st.st., AISI304 st.st. armoured, *36.37" max* (6 mt max)
1 - Nude capillary AISI304, *36.37" max* (6 mt max)	**6** - Capillary AISI316 st.st., AISI316 st.st. armoured, *36.37" max* (6 mt max)

FILLING FLUIDS and process fluid temperature

Fluid	Vacuum	Pressure	Fluid	Vacuum	Pressure
Standard silicon oil	*-40...+122°F* (-40...+100°C)	*-40...+302°F* (-40...+150°C)	**E** - Fluorinated liquid "E"	*-40...+212°F* (-40...+100°C)	*-40...+302°F* (-40...+150°C)
B - Silicon oil "B"	*-40...+302°F* (-40...+150°C)	*-40...+482°F* (-40...+250°C)	**F** - Silicon oil"C"	*-130...+176°F* (-90...+80°C)	*-130...+302°F* (-90...+150°C)
C - Silicon oil"C"	*-14...+392°F* (-10...+200°C)	*-14...+662°F* (-10...+350°C)	**G** - Mineral food oil "G"	*-14...+302F* (-10...+150°C)	*-14...+392°F* (-10...+200°C)
D - Silicon oil"D"	*-14...+392°F* (-10...+200°C)	*-14...+752°F* (-10...+400°C)			

OPTIONS

C05 - Helium Test	**S40** - Special calibration for pressure gauges overpressure [3] [4] [5]
E30 - Nace version MR0103/MR0175 (ISO 15156) [2]	**MPP** - PTFE diaphragm protection, for temperature up to *302 °F* (150 °C) [3]
TS5 - AISI316L stainless steel washing plug, 1/4" NPT [1]	**P15** - ASTM A193/B7 - A194/2H studs, nuts and washers
P04 - Dye penetrant test	

(1) on models with AISI316L process connection only
(2) Stainless steel process connection and Monel 400 or Hastelloy C276 diaphragm
(3) Except for vacuum and compound gauges
(4) Overpressure equal to flange rating, max *3000 psi* (210 bar)
(5) To be ordered with silicon oil "B" only

"continuous duty" diaphragm seal welded, with flanged connection

MGS9/7

RG2 - 08/14

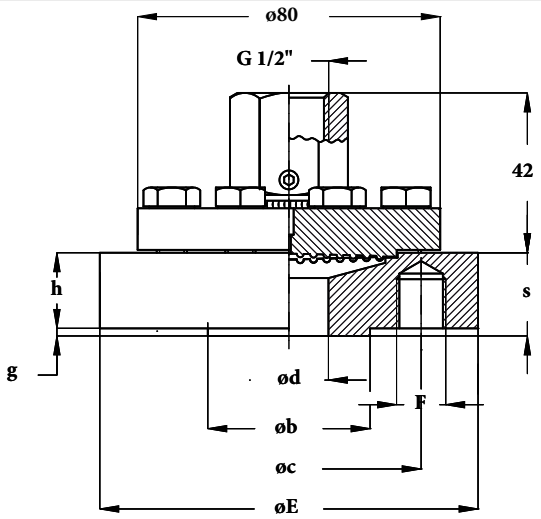

EN 1092-1:2007 STANDARD

dimensions : mm

DN	PN-bar	Code	h	E	b	d	g	c	s	N (1)	F
15	10-16-25-40	OS0	20	95	45	15	2	65	22	4	M12
15	63...160	OZ0	18	105	45	15	2	75	20	4	M12
20	10-16-25-40	PS0	16	105	58	20	2	75	18	4	M12
20	63...100	PU0	20	130	58	20	2	90	22	4	M16
25	10-16-25-40	QS0	16	115	68	25	2	85	18	4	M12
25	63...160	QZ0	22	140	68	25	2	100	24	4	M16
40	10-16-25-40	SS0	18	150	88	40	3	110	21	4	M16
40	63...100	SU0	23	170	88	40	3	125	26	4	ø22
40	160	SZ0	25	170	88	40	3	125	28	4	ø22
50	10-16-25-40	TS0	17	165	102	50	3	125	20	4	ø18
50	63	TT0	23	180	102	50	3	135	26	4	ø22
50	100	TU0	25	195	102	50	3	145	28	4	ø26
50	160	TZ0	27	195	102	50	3	145	30	4	ø26

1) N° threaded or free holes

ASME B16-5:2003 STANDARD

dimensions : *inches*

DN	Classe (2)	Code	h	E	b	d	g	c	s	N (1)	F
1/2"	150	4AA	0.87"	3.54"	1.37"	0.59"	0.08"	2.37"	0.94"	4	1/2"-13UNC
1/2"	300	4BA	0.81"	3.74"	1.37"	0.59"	0.08"	2.63"	0.89"	4	1/2"-13UNC
1/2"	600	4DA	0.81"	3.74"	1.37"	0.59"	0.28"	2.63"	1.08"	4	1/2"-13UNC
1/2"	900...1500	4FA	0.89"	4.72"	1.61"	0.59"	0.28"	3.25"	1.16"	4	3/4"-10UNC
3/4"	150	5AA	0.79"	3.94"	1.69"	0.79"	0.08"	2.75"	0.87"	4	1/2"-13UNC
3/4"	300	5BA	0.71"	4.53"	1.69"	0.79"	0.08"	3.25"	0.79"	4	5/8"-11UNC
3/4"	600	5DA	0.71"	4.53"	1.69"	0.79"	0.28"	3.25"	0.98"	4	5/8"-11UNC
3/4"	900...1500	5FA	1"	5.12"	1.69"	0.79"	0.28"	3.5"	1.30"	4	3/4"-10UNC
1"	150	6AA	0.63"	4.33"	2"	0.98"	0.08"	3.13"	0.71"	4	1/2" -13UNC
1"	300	6BA	0.71"	4.92"	2"	0.98"	0.08"	3.5"	0.79"	4	5/8"-11UNC
1"	600	6DA	0.71"	4.92"	2"	0.98"	0.28"	3.5"	0.98"	4	5/8"-11UNC
1"	900...1500	6FA	1.14"	5.9"	2"	0.98"	0.28"	4"	1.42"	4	7/8"-9UNC
1"1/2	150	AAA	0.63"	4.92"	2.87"	1.57"	0.08"	3.87"	0.71"	4	1/2"-13UNC
1"1/2	300	ABA	0.81"	6.1"	2.87"	1.57"	0.08"	4.5"	0.89"	4	3/4"-10UNC
1"1/2	600	ADA	0.89"	6.1"	2.87"	1.57"	0.28"	4.5"	1.16"	4	3/4"-10UNC
1"1/2	900...1500	AFA	1.26"	7.09"	2.87"	1.57"	0.28"	4.87"	1.56"	4	1"-8UNC
2"	150	BAA	0.69"	5.9"	3.63"	1.97"	0.08"	4.75"	0.77"	4	ø 19
2"	300	BBA	0.83"	6.5"	3.63"	1.97"	0.08"	5"	0.91"	8	ø 19
2"	600	BDA	1"	6.5"	3.63"	1.97"	0.28"	5"	1.28"	8	ø 19
2"	900...1500	BFA	1.52"	8.46"	3.63"	1.97"	0.28"	6.51"	1.79"	8	ø 26

1) N° threaded or free holes

2) class 150 : PN 20 bar; class 300 : PN 50 bar; class 600 : PN 100 bar; class 900...1500 : PN 150...250 bar

"HOW TO ORDER" SEQUENCE

Section	/ Model material	/ Connection material	/ Diaphragm connection	/ Process	/ Flange finishing	/ Instrument connection	/ Assembling	/ Options
4	700	4, 5, 6 9, 1	4, 6, 9 B, J, I U	OS0...TZ0 4AA...BFA	RF3...RF7	41F	D 1, 9, 6	B...G C05...P15

Copyright © Nuova Fima srl. All rights reserved. Any part of this publication should not be reproduced without a written Nuova Fima's srl approval

IN ORDER TO IMPROVE THEIR PRODUCTION, MESSRS. NUOVA FIMA RESERVE THE RIGHT TO THEMSELVES TO MAKE ALL THE MODIFICATIONS THAT THEY DEEM INDISPENSABLE AT ANY TIME. UPDATED DATA SHEETS ARE AVAILABLE ON SITE: www.nuovafima.com

NUOVA FIMA USA Inc.
www.nuovafima.com - e-mail: infousa@nuovafima.com
4123 Hollister, Suite G - TX 77080 Houston
TEL. +1 713.690.9800 - FAX +1 713.690.9803

NUOVA FIMA srl
www.nuovafima.com - e-mail: info@nuovafima.com
P.O. BOX 58 - VIA C. BATTISTI 59 - 28045 INVORIO (NO) ITALY
TEL. +39 0322 253200 - FAX +39 0322 253232

MGS9/4

"In line" diaphragm seal, with flanged connection

Diaphragm seals are designed to isolate the sensing element of pressure gauges, pressure switches and electronic pressure transmitters from process liquids which may be corrosive, viscous, sedimentous and/or with a high temperature. The diaphragm welded to the upper body and leak proof tested, ensure separation of filling fluid from process medium. Diaphragm position permit an accurate and deeper cleaning. Process sizes are ASME/UNI/DIN flanged to suit application in chemical, petrochemical, water treatment and paper industries.

4.400 - MGS9/4

Working pressure: *from 0...15 to 0...600 psi* (from 0...1to 0...40 bar).
Working temperature: *-49...+302°F* (-45°C...+150°C.)
Accuracy*: (add to instrument accuracy) ±0,5% for direct mounting; ± 1% for capillary mounting.
Instrument connection: AISI 316 st.st .
Diaphragm: AISI 316L st.st (cod. **4**), Monel 400 (cod. **6**), Hastelloy C276 (cod. **9**), Hastelloy B2 (cod. **1**), Tantaluum (cod. **B**), Titanium (cod. **2**), Nickel (cod. **7**), AISI 316 L st.st. PTFE coated** (cod. **8**), Incoloy 825 (cod. **I**), Inconel 600 (cod. **J**).
Flanged process connection: AISI 316 st.st. (cod. **4**), AISI316 L st.st. (cod. **5**), Monel 400 (cod. **6**), Hastelloy C276 (cod. **9**), Hastelloy B2 (cod. **1**), Tantaluum (cod. **B**), Titanium (cod. **2**), Nickel (cod. **7**), AISI 316 st.st. PTFE** coated (cod. **N**), ASTM A182 gr. F51 (cod. **S**).
Dimensions : DN 15...50 e PN 10...40 UNI-DIN step seal; 1/2"...2" class 150...600 RF as per ASME B16.5.
UNI-DIN flanges finishing: type B1 (PN 2,5...40) = Ra 3,2...12,5 µm (cod. **RF7**); type B2 (PN 63...100) = Ra 0,8...3,2 µm (cod. **RF8**).
ASME flanges finishing: type RF = Ra 125...250 AARH (cod. **RF3**).
Filling liquid: silicon oil.

* at *+68°F* (20 °C) process temperature (or state when ordering)

** max. temperature *328°F* (150 °C), with PTFE coating.

ASSEMBLING

All diaphragm seals are mounted on the instruments ad fixed by an aluminium protection label. For applications with capillary: shoul diaphragm seal and instrument not be at the same level, instrument adjustment is required). (For use and installation, see data sheet "4")

D - Direct	**9** - Capillary AISI304 st.st., AISI304 st.st. armoured, *36.37" max* (6 mt max)
1 - Nude capillary AISI304, *36.37" max* (6 mt max)	**6** - Capillary AISI316 st.st., AISI316 st.st. armoured, *36.37" max* (6 mt max)

FILLING FLUIDS and process fluid temperature

Fluid	Vacuum	Pressure	Fluid	Vacuum	Pressure
Standard silicon oil	*-40...+122°F* (-40...+100°C)	*-40...+302°F* (-40...+150°C)	**E** - Fluorinated liquid "E"	*-40...+212°F* (-40...+100°C)	*-40...+302°F* (-40...+150°C)
B - Silicon oil "B"	*-40...+302°F* (-40...+150°C)	*-40...+482°F* (-40...+250°C)	**F** - Silicon oil"C"	*-130...+176°F* (-90...+80°C)	*-130...+302°F* (-90...+150°C)
C - Silicon oil"C"	*-14...+392°F* (-10...+200°C)	*-14...+662°F* (-10...+350°C)	**G** - Mineral food oil "G"	*-14...+302F* (-10...+150°C)	*-14...+392°F* (-10...+200°C)
D - Silicon oil"D"	*-14...+392°F* (-10...+200°C)	*-14...+752°F* (-10...+400°C)			

OPTIONS

C05 - Helium Test (1)	**P04** - Dye penetrant test (1)
E30 - NACE MR0103/MR0175 (ISO 15156) (2)	

(1) Available for some excutions pls. consult our technical dep. to check their feasibility.

(2) With Monel 400 or Hastelloy C diaphragm only.

RG5 - 08/14

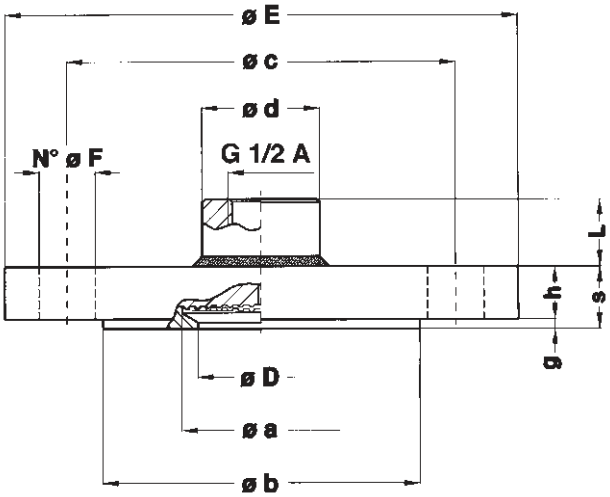

UNI-DIN STANDARDS

dimensions : mm

DN	PN-bar	Code	D	E	c	b	a	d	g	h	s	L	N (1)	F	Ranges (2)
15	10...40	**OK0**	15	95	65	45	40	28	2	17	19	16,5	4	14	2,5...40
20	10...40	**PK0**	20	105	75	58	40	28	2	17	19	16,5	4	14	2,5...40
25	10...40	**QK0**	25	115	85	68	50	38	2	17	19	24,5	4	14	1...40
40	10...40	**SK0**	40	150	110	88	50	38	3	16	19	24,5	4	18	1...40
50	10...40	**TK0**	50	165	125	102	50	38	3	17	20	23,5	4	18	1...40

(1) N° holes .

(2) bar ranges, for instruments with dial size ≥ *4"* (100mm).

ASME STANDARDS

dimensions : *inches*

DN	Class	Code	D	E	c	b	a	d	g	h	s	L	N (1)	F	Ranges (3)
1/2"	150	**4AA**	*0.59"*	*3.5"*	*2.37"*	*1.37"*	*1.18"*	*1.02"*	*0.06"*	*0.66"*	*0.72"*	*0.64"*	4	*0.62"*	100...290 (4)
1/2"	300	**4BA**	*0.59"*	*3.74"*	*2.62"*	*1.37"*	*1.18"*	*1.02"*	*0.06"*	*0.66"*	*0.72"*	*0.64"*	4	*0.62"*	100...580
1/2"	600	**4DA**	*0.59"*	*3.74"*	*2.62"*	*1.37"*	*1.18"*	*1.02"*	*0.25"*	*0.66"*	*0.95"*	*0.64"*	4	*0.62"*	100...580
3/4"	150	**5AA**	*0.78"*	*3.87"*	*2.74"*	*1.68"*	*1.57"*	*1.10"*	*0.06"*	*0.66"*	*0.72"*	*0.64"*	4	*0.62"*	60...290
3/4"	300	**5BA**	*0.78"*	*4.62"*	*3.24"*	*1.68"*	*1.57"*	*1.10"*	*0.06"*	*0.66"*	*0.72"*	*0.64"*	4	*0.74"*	60...580
3/4"	600	**5DA**	*0.78"*	*4.62"*	*3.24"*	*1.68"*	*1.57"*	*1.10"*	*0.25"*	*0.66"*	*0.95"*	*0.64"*	4	*0.74"*	60...580
1"	150	**6AA**	*0.98"*	*4.25"*	*3.12"*	*2"*	*1.57"*	*1.10"*	*0.06"*	*0.7"*	*0.76"*	*0.64"*	4	*0.62"*	60...290
1"	300	**6BA**	*0.98"*	*4.88"*	*3.5"*	*2"*	*1.96"*	*1.49"*	*0.06"*	*0.7"*	*0.76"*	*0.96"*	4	*0.74"*	15...580
1"	600	**6DA**	*0.98"*	*4.88"*	*3.5"*	*2"*	*1.96"*	*1.49"*	*0.25"*	*0.7"*	*0.96"*	*0.96"*	4	*0.74"*	15...580
1"1/2	150	**AAA**	*1.57"*	*5"*	*3.87"*	*2.87"*	*1.96"*	*1.49"*	*0.06"*	*0.7"*	*0.76"*	*0.96"*	4	*0.62"*	15...290
1"1/2	300	**ABA**	*1.57"*	*6.12"*	*4.5"*	*2.87"*	*1.96"*	*1.49"*	*0.06"*	*0.80"*	*0.86"*	*0.86"*	4	*0.86"*	15...580
1"1/2	600	**ADA**	*1.57"*	*6.12"*	*4.5"*	*2.87"*	*1.96"*	*1.49"*	*0.25"*	*0.88"*	*1.14"*	*0.59"*	4	*0.86"*	15...580
2"	150	**BAA**	*1.96"*	*6"*	*4.74"*	*3.62"*	*1.96"*	*1.49"*	*0.06"*	*0.74"*	*0.80"*	*0.92"*	4	*0.74"*	15...290
2"	300	**BBA**	*1.96"*	*6.49"*	*5"*	*3.62"*	*1.96"*	*1.49"*	*0.06"*	*0.88"*	*0.94"*	*0.78"*	8	*0.74"*	15...580
2"	600	**BDA**	*1.96"*	*6.49"*	5"	3.62"	1.96"	1.49"	0.25"	1.04"	1.25"	0.47"	8	*0,74"*	15...580

(1) N° holes .

(2) bar ranges, for instruments with dial size ≥ *4"* (100mm).

(3) psi ranges, for instruments with dial size ≥ *4"* (100mm).

(4) not available, when PTFE coated.

"HOW TO ORDER" SEQUENCE

Section	/ Model material	/ Connection material	/ Diaphragm connection	/ Process	/ Flange finishing	/ Instrument connection	/ Assembling	/ Options
4	**400**	**4, 5, 6** **9, 1, B** **2, 7, N, S**	**4, 6, 9** **1, B, 2** **7, 8, I, J**	**OK0..TK0** **4AA...BDA**	**RF3...RF8**	**41F - G 1/2 F**	**D** **1, 9, 6**	**B...G** **C04...P04**

Copyright © Nuova Fima srl. All rights reserved. Any part of this publication should not be reproduced without a written Nuova Fima's srl approval

NUOVA FIMA USA Inc.
www.nuovafima.com - e-mail: infousa@nuovafima.com
4123 Hollister, Suite G - TX 77080 Houston
TEL. +1 713.690.9800 - FAX +1 713.690.9803

NUOVA FIMA srl
www.nuovafima.com - e-mail: info@nuovafima.com
P.O. BOX 58 - VIA C. BATTISTI 59 - 28045 INVORIO (NO) ITALY
TEL. +39 0322 253200 - FAX +39 0322 253232

IN ORDER TO IMPROVE THEIR PRODUCTION, MESSRS. NUOVA FIMA RESERVE THE RIGHT TO THEMSELVES TO MAKE ALL THE MODIFICATIONS THAT THEY DEEM INDISPENSABLE AT ANY TIME. UPDATED DATA-SHEET'S ARE AVAILABLE ON SITE: www.nuovafima.com

MGS9/5

diaphragm seals, welded

Diaphragm seals are designed to isolate the sensing element of pressure gauges and pressure switches from process fluids which may be corrosive, viscous, sedimentous and/or with a high temperature. The diaphragm is welded to the upper body, to ensure separation of filling fluid from process medium. Diaphragm faced position permit an accurate and deeper cleaning. Process sizes are ASME/EN 1092 flanged to suit application in chemical, petrochemical, water treatment, paper industries.

4.500 - MGS9/5

Nominal pressure: *up to 0...6000 psi* (up to 0...400 bar) depending on flange rating.

Measuring ranges: *from -30...0 IN Hg to 0...6000 psi* (from -1...0 to 0...400 bar); see also table at page 2.

Working temperature: *-130...+752°F* (-90°C...+400°C.); depending on filling fluid.

Accuracy*: (add to instrument accuracy) ±0,5% for direct mounting; ± 1% for capillary mounting.

Diaphragm, welded to process connection:

AISI 316 L st.st (cod. **4**); Monel 400 (cod. **6**); Hastelloy C 276 (cod. **9**).

Flanged process connection: AISI 316 st.s. (cod. **4**); AISI 316L st.s. (cod. **5**).

* at *+68°F* (20 °C) working temperature

Full-cover version: wetted parts covered with Monel 400 (cod. **6FC**); Hastelloy C 276 (cod. **9FC**); Tantalum (cod. **BFC**).

Dimensions : DN 25...100 and PN 2,5...400 EN 1092-1; 1"...4" class 150...2500 as per ASME B16.5.

Finishing: EN 1092-1 type B: Ra 3,2...12,5 µm (cod. **RF7**); ASME B16.5 type RF = Ra 125...250 AARH (cod. **RF3**); (all other finishing type are available).

ASSEMBLING

All diaphragm seals are mounted on the instruments ad fixed by an aluminium protection label. For applications with capillary: shoul diaphragm seal and instrument not be at the same level, instrument adjustment is required). (For use and installation, see data sheet "4")

D - Direct	**9** - Capillary AISI304 st.st., AISI304 st.st. armoured, *36.37" max* (6 mt max)
1 - Nude capillary AISI304, *36.37" max* (6 mt max)	**6** - Capillary AISI316 st.st., AISI316 st.st. armoured, *36.37" max* (6 mt max)

FILLING FLUIDS and process fluid temperature

Fluid	Vacuum	Pressure	Fluid	Vacuum	Pressure
Standard silicon oil	*-40...+122°F* (-40...+100°C)	*-40...+302°F* (-40...+150°C)	**E** - Fluorinated liquid "E"	*-40...+212°F* (-40...+100°C)	*-40...+302°F* (-40...+150°C)
B - Silicon oil "B"	*-40...+302°F* (-40...+150°C)	*-40...+482°F* (-40...+250°C)	**F** - Silicon oil"F"	*-130...+176°F* (-90...+80°C)	*-130...+302°F* (-90...+150°C)
C - Silicon oil"C"	*-14...+392°F* (-10...+200°C)	*-14...+662°F* (-10...+350°C)	**G** - Mineral food oil "G"	*-14...+302F* (-10...+150°C)	*-14...+392°F* (-10...+200°C)
D - Silicon oil"D"	*-14...+392°F* (-10...+200°C)	*-14...+752°F* (-10...+400°C)			

OPTIONS

C05 - Helium Test (1)	**P04** - Dye penetrant test (1)
E30 - NACE MR0103/MR0175 (ISO 15156) (2)	

(1) Available for some excutions pls. consult our technical dep. to check their feasibility.

(2) With Monel 400 or Hastelloy C diaphragm only.

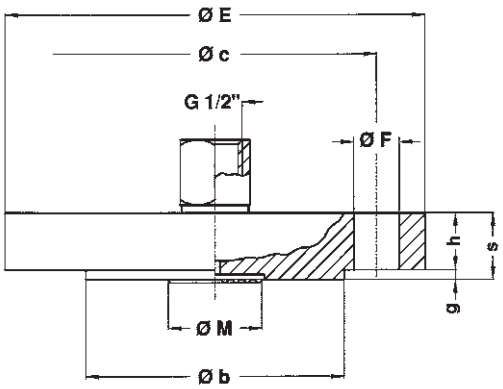

MINIMIM MEASURING RANGES (bar)

dimensions : mm

ϕ M	30	40	50	65
pressure	6	2,5	1	0,6
vacuum			-1	-1
vacuum...pressure	-1...+5	-1...+1,5	-1...+0,6	-1...+0,6

EN 1092 STANDARD, type B

dimensions : mm

DN (1)	PN-bar (1) (3)	Code	E	c	b	g	h	s	N (2)	F	M
25	10...16/25...40	QQ0/QS0	115	85	68	2	16	18	4	14	30
25	63/100	QT0/QU0	140	100	68	2	22	24	4	18	30
40	10...16/25...40	SQ0/SS0	150	110	88	3	15	18	4	18	40
40	63/100	ST0/SU0	170	125	88	3	23	26	4	22	40
50	10…16	TQ0	165	125	102	3	15	18	4	18	50
50	25…40	TS0	165	125	102	3	17	20	4	18	50
50	63	TT0	180	135	102	3	23	26	4	22	50
50	100	TU0	195	145	102	3	25	28	4	26	50
80	10/16	VP0/VQ0	200	160	138	3	17	20	8	18	65
80	25…40	VS0	200	160	138	3	21	24	8	18	65
80	100	VU0	230	180	138	3	29	32	8	26	65

(1) Flanges DN 25...100 and PN 2.5...400 are all available

(2) N° holes.

(3) Maximum nominal pressure of connected instrument

ASME B16.5 STANDARD, type RF

dimensions : *inches*

DN (1)	Class (1)	bar (3)	Code	E	c	b	g	h	s	N (2)	F	M
1"	150	20	6AA	*4,33"*	*3,13"*	*2"*	*0,08"*	*0,50"*	*0,58"*	4	0,63"	1,18"
1"	300	50	6BA	*4,92"*	*3,5"*	*2"*	*0,08"*	*0,63"*	*0,7"*	4	0,75"	1,18"
1"	600	110	6DA	*4,92"*	*3,5"*	*2"*	*0,28"*	*0,69"*	*0,96"*	4	0,75"	1,18"
1"	900…1500	150...260	6FA	*5,91"*	*4"*	*2"*	*0,28"*	*1,13"*	*1,4"*	4	1"	1,18"
1" 1/2	150	20	AAA	*4,92"*	*3,87"*	*2,87"*	*0,08"*	*0,63"*	*0,7"*	4	0,63"	1,57"
1" 1/2	300	50	ABA	*6,1"*	*4,5"*	*2,87"*	*0,08"*	*0,75"*	*0,83"*	4	0,87"	1,57"
1" 1/2	600	110	ADA	*6,1"*	*4,5"*	*2,87"*	*0,28"*	*0,88"*	*1,15"*	4	0,87"	1,57"
1" 1/2	900…1500	150...260	AFA	*7,09"*	*4,87"*	*2,87"*	*0,28"*	*1,25"*	*1,53"*	4	1,12"	1,57"
1" 1/2	2500	420	AGA	*8,07"*	*5,75"*	*2,87"*	*0,28"*	*1,75"*	*2,03"*	*4*	*1,26"*	*1,57"*
2"	150	20	BAA	*5,91"*	*4,75"*	*3,63"*	*0,08"*	*0,69"*	*0,77"*	4	0,75"	1,97"
2"	300	50	BBA	*6,5"*	*5"*	*3,63"*	*0,08"*	*0,81"*	*0,89"*	8	0,75"	1,97"
2"	600	110	BDA	*6,5"*	*5"*	*3,63"*	*0,28"*	*1"*	*1,28"*	8	0,75"	1,97"
2"	900…1500	150...260	BFA	*8,46"*	*6,5"*	*3,63"*	*0,28"*	*1,5"*	*1,78"*	8	1"	1,97"
2"	2500	420	BGA	*9,25"*	*6,75"*	*3,63"*	*0,28"*	*2"*	*2,28"*	*8*	*1,12"*	*1,97"*
3"	150	20	EAA	*7,48"*	*6"*	*5"*	*0,08"*	*0,88"*	*0,96"*	4	0,75"	2,56"
3"	300	50	EBA	*8,27"*	*6,63"*	*5"*	*0,08"*	*1,06"*	*1,14"*	8	0,87"	2,56"
3"	600	110	EDA	*8,27"*	*6,63"*	*5"*	*0,28"*	*1,25"*	*1,53"*	8	0,87"	2,56"
3"	900	150	EEA	*9,45"*	*7,5"*	*5"*	*0,28"*	*1,5"*	*1,78"*	8	1"	2,56"
3"	1500	260	EFA	*10,43"*	*8"*	*5"*	*0,28"*	*1,88"*	*2,15"*	8	1,26"	2,56"

(1) Flanges 1"...4" and classes 150...2500 are all available.

(2) N° holes.

(3) Maximum nominal pressure of connected instrument

"HOW TO ORDER" SEQUENCE

Section	Model	Connection material	Diaphragm material	Process connection	Flange finishing	Instrument connection	Assembling	Options
4	500	4, 5	4, 5, 9 6FC...BFC	QQ0...VU0 6AA...EFA	RF3...RF7	41F - G 1/2 F	D, 1 9, 6	B...G C05...P04

Copyright © Nuova Fima srl. All rights reserved. Any part of this publication should not be reproduced without a written Nuova Fima's srl approval

NUOVA FIMA USA Inc.
www.nuovafima.com - e-mail: infousa@nuovafima.com
4123 Hollister, Suite G - TX 77080 Houston
TEL. +1 713.690.9800 - FAX +1 713.690.9803

NUOVA FIMA srl
www.nuovafima.com - e-mail: info@nuovafima.com
P.O. BOX 58 - VIA C. BATTISTI 59 - 28045 INVORIO (NO) ITALY
TEL. +39 0322 253200 - FAX +39 0322 253232

RB5 - 06/14

IN ORDER TO IMPROVE THEIR PRODUCTION, MESSRS. NUOVA FIMA RESERVE THE RIGHT TO THEMSELVES TO MAKE ALL THE MODIFICATIONS THAT THEY DEEM INDISPENSABLE AT ANY TIME. UPDATED DATA-SHEETS ARE AVAILABLE ON SITE: **www.nuovafima.com**

MGS9/WAF

"wafer" diaphragm seal

Diaphragm seals are designed to isolate the sensing element of pressure gauges, pressure switches and electronic pressure transmitters from process liquids which may be corrosive, viscous, sedimentous and/or with a high temperature. The diaphragm welded to the upper body and leak proof tested, ensure separation of filling fluid from process medium. Diaphragm faced position permit an accurate and deeper cleaning. Process sizes are ASME - EN 1092 flanged to suit application in chemical, petrochemical, water treatment, paper.

4.WAF - MGS9/WAFER

Working pressure: *from 0...40 INWC to 0...2000 psi (*da 0...100 mbar a 0...160 bar), depending on flange type.
Process temperature: *-49...+302°F* (-45°C...+150°C.)
Instrument connection: AISI 304 st.st. capillary, to be welded on the transmitter.
Diaphragm: AISI 316L st.st. (cod. **4**), Hastelloy C276 (cod. **9**), Hastelloy B2 (cod. **1**), Tantalum (cod. **B**).
Process connection: AISI 316 st.st. (cod. **4**), AISI 316L st.st. (cod. **5**), Hastelloy C276 (cod. **9**).
AISI 316 st.st flanged connection:
-ASME B16.5 standards: 2" - 3"; class 150...2500 form RF; **-EN 1092 standard:** DN 50 - 80 ; PN 16...160 step seal.
EN 1092 flanges finishing: type B1 (PN 2,5...40) = Ra 3,2...12,5 µm (cod. **RF7**); type B2 (PN 63...100) = Ra 0,8...3,2 µm (cod. **RF8**).
ASME flanges finishing: type RF = Ra 125...250 AARH (cod. **RF3**).
Filling liquid: silicon oil.

RCS - 08/14

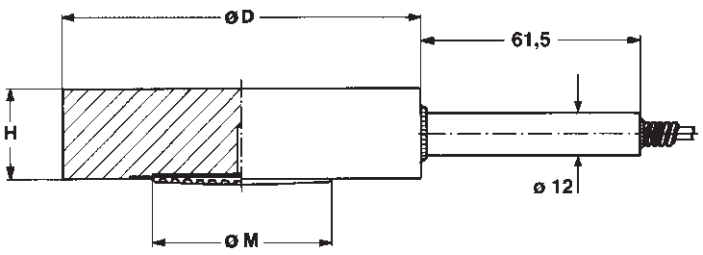

FLANGED CONNECTION AS PER EN 1092

DN	PN-bar	Code	D	M	H
50	16...160	TX0	*4.01”* (102)	*1.96”* (50)	*0.78”* (20)
80	16...160	VX0	*5.43”* (138)	*2.55”* (65)	

dimensions : *inches* (mm)

FLANGED CONNECTION AS PER ASME B16.5

DN	Class	Code	D	M	H
2"	150...2500	BJA	*3,62”*	*1,96”*	*0,78”*
3"	150...2500	EJA	*5”*	*2,55”*	*0,78”*

dimensions : *inches*

ASSEMBLING

Should diaphragm seal and instrument not be at a same level, instrument on installation is required.

1 -	Capillary AISI304 st.st. *236” max* (6 mt max)
9 -	Capillary AISI304 st.st., AISI304 st.st. armoured, *236” max* (6 mt max)
6 -	Capillary AISI316 st.st., AISI316 st.st. armoured, *236” max* (6 mt max)

FILLING FLUIDS and process fluid temperature

Fluid	Vacuum	Pressure	Fluid	Vacuum	Pressure
Standard silicon oil	*-40...+122°F* (-40...+100°C)	*-40...+302°F* (-40...+150°C)	**E** - Fluorinated liquid “E”	*-40...+212°F* (-40...+100°C)	*-40...+302°F* (-40...+150°C)
B - Silicon oil “B”	*-40...+302°F* (-40...+150°C)	*-40...+482°F* (-40...+250°C)	**F** - Silicon oil“C”	*-130...+176°F* (-90...+80°C)	*-130...+302°F* (-90...+150°C)
C - Silicon oil“C”	*-14...+392°F* (-10...+200°C)	*-14...+662°F* (-10...+350°C)	**G** - Mineral food oil “G”	*-14...+302F* (-10...+150°C)	*-14...+392°F* (-10...+200°C)
D - Silicon oil“D”	*-14...+392°F* (-10...+200°C)	*-14...+752°F* (-10...+400°C)			

”HOW TO ORDER” SEQUENCE

Section	/ Model material	/ Connection material	/ Diaphragm	/ Process connection	/ Flange finishing	/ Instrument connection	/ Assembling	/ Options
4	WAF	4, 5, 9	4, 9 1, B	TX0...VX0 BJA...EJA	RF3 RF7 RF8	23M - 1/4 NPT M 41F - G 1/2 F	1, 9, 6	B...G

Copyright © Nuova Fima srl. All rights reserved. Any part of this publication should not be reproduced without a written Nuova Fima's srl approval

NUOVA FIMA USA Inc.
www.nuovafima.com - e-mail: infousa@nuovafima.com
4123 Hollister, Suite G - TX 77080 Houston
TEL. +1 713.690.9800 - FAX +1 713.690.9803

NUOVA FIMA srl
www.nuovafima.com - e-mail: info@nuovafima.com
P.O. BOX 58 - VIA C. BATTISTI 59 - 28045 INVORIO (NO) ITALY
TEL. +39 0322 253200 - FAX +39 0322 253232

IN ORDER TO IMPROVE THEIR PRODUCTION, MESSRS. NUOVA FIMA RESERVE THE RIGHT TO THEMSELVES TO MAKE ALL THE MODIFICATIONS THAT THEY DEEM INDISPENSABLE AT ANY TIME. UPDATED DATA-SHEETS ARE AVAILABLE ON SITE: www.nuovafima.com

MGS9/R

"in line" diaphragm seal

Diaphragm seals are designed to isolate the sensing element of pressure gauges and pressure switches from process fluids which may be corrosive, viscous, sedimentous and/or with a high temperature. The diaphragm is welded to the upper body, to ensure separation of filling fluid from process medium. The "in-line" diaphragm position enables deep cleaning of their surfaces. Flange clamping with metallic sealing guarantees the system against leakage at high process fluid temperatures and pressures.

4.R00 - MGS9/R

Working pressure: *from 0...100 to 0...3000 psi* (from 0...6 to 0...250 bar).
Process temperature: *-49...+302°F* (-45°C...+150°C.)
Accuracy*: (add to instrument accuracy) ±0,5% for direct mounting; ± 1% for capillary mounting.
Instrument connection: AISI 316 st.st.
Bolts and lock ring: AISI 304 st.st.
Diaphragm: welded to process connection,
4 - AISI 316 L st.st,
9 - Hastelloy C276.
Process connection:
4 - AISI 316 st.st.,
5 - AISI 316L st.st.
Process connection, welded type:
7RC - saddle, for pipe size DN 2"...4";
7MS - "in line", for pipe size 1/2"...1";
7MT - "in line", for pipe size 1" 1/2...4".
Process connection, flanged type: (Mod. 7FL)
-**"in line"**, for flange size 1"1/2 - 2" ; 150...900 RF;
-**"in line"**, for flange size DN 40...50, PN 10...100 step seal. **Filling liquid:** silicon oil.

* at *68°F* (20 °C) process temperature (or state temperature when ordering)

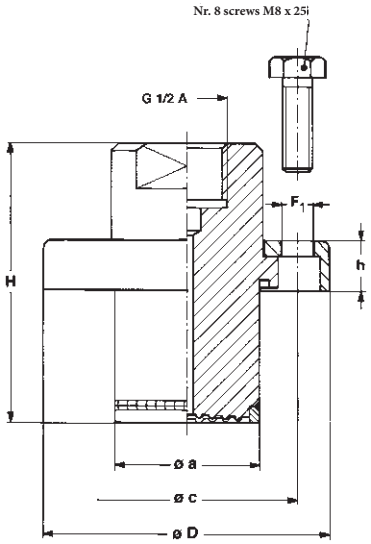

h	H	a	c	D	F_1
0.51"	*2.91"*	*1.49"*	*2.28"*	*2.95"*	*0.33"*
(13)	(74)	(38)	(58)	(75)	(8,5)

dimensions : *inches* (mm)

ASSEMBLING

All diaphragm seals are mounted on the instruments ad fixed by an aluminium protection label. For applications with capillary: shoul diaphragm seal and instrument not be at the same level, instrument adjustment is required). (For use and installation, see data sheet "4")

D - Direct	**9** - Capillary AISI304 st.st., AISI304 st.st. armoured, *36.37" max* (6 mt max)
1 - Nude capillary AISI304, *36.37" max* (6 mt max)	**6** - Capillary AISI316 st.st., AISI316 st.st. armoured, *36.37" max* (6 mt max)

FILLING FLUIDS and process fluid temperature

Fluid	Vacuum	Pressure	Fluid	Vacuum	Pressure
Standard silicon oil	*-40...+122°F* (-40...+100°C)	*-40...+302°F* (-40...+150°C)	**E** - Fluorinated liquid "E"	*-40...+212°F* (-40...+100°C)	*-40...+302°F* (-40...+150°C)
B - Silicon oil "B"	*-40...+302°F* (-40...+150°C)	*-40...+482°F* (-40...+250°C)	**F** - Silicon oil"C"	*-130...+176°F* (-90...+80°C)	*-130...+302°F* (-90...+150°C)
C - Silicon oil"C"	*-14...+392°F* (-10...+200°C)	*-14...+662°F* (-10...+350°C)	**G** - Mineral food oil "G"	*-14...+302F* (-10...+150°C)	*-14...+392°F* (-10...+200°C)
D - Silicon oil"D"	*-14...+392°F* (-10...+200°C)	*-14...+752°F* (-10...+400°C)			

OPTIONS

C05 - Helium Test	**P04** - Dye penetrant test

"HOW TO ORDER" SEQUENCE

Section/Model/Connection material/Diaphragm material/Process Connection/Instrument connection/Assembling/Options

4	**R00**	**4, 5**	**4, 9**	**---**	**41F - G 1/2 F**	**D**	**B...G**
						1, 9, 6	**C05, P04**

IN ORDER TO IMPROVE THEIR PRODUCTION, MESSRS. NUOVA FIMA RESERVE THE RIGHT TO THEMSELVES TO MAKE ALL THE MODIFICATIONS THAT THEY DEEM INDISPENSABLE AT ANY TIME. UPDATED DATA-SHEETS ARE AVAILABLE ON SITE: www.nuovafima.com

Copyright © Nuova Fima srl. All rights reserved. Any part of this publication should not be reproduced without a written Nuova Fima's srl approval

NUOVA FIMA USA Inc.
www.nuovafima.com - e-mail: infousa@nuovafima.com
4123 Hollister, Suite G - TX 77080 Houston
TEL. +1 713.690.9800 - FAX +1 713.690.9803

NUOVA FIMA srl
www.nuovafima.com - e-mail: info@nuovafima.com
P.O. BOX 58 - VIA C. BATTISTI 59 - 28045 INVORIO (NO) ITALY
TEL. +39 0322 253200 - FAX +39 0322 253232

MGS9/5

plastic diaphragm seal, with threaded connection

Diaphragm seals are designed to isolate the sensing element of pressure gauges, pressure switches and electronic pressure transmitter from process fluids which may be corrosive, viscous, sedimentous. An elastic diaphragm, mechanically clamped, fitted to a leak proof check, guarantees the separation of the process fluid from the transmission fill fluid. The corrosion is prevented by the assembling without bolts and nuts. Typical applications are: galvanic and water treatments, irrigation, electronic boards production.

4.P10 - MGS9/P10 - for pressure gauges ≥ DN *4"* (100mm)

Working pressure and temperature: see table below.
Accuracy (1): (add to instrument accuracy) ±1,0% for direct mounting.
Instrument connection: G 1/2.
Process connection: G 1/2, 1/2" NPT F.
Body Material :
V - PVC.
Diaphragm material :
A - PTFE.
Filling liquid: silicon oil.

4.P63 - MGS9/P63 - for pressure gauges DN *2.5"* (63mm)

Working pressure and temperature: see table below.
Accuracy (1): (add to instrument accuracy) ±1,0% for direct mounting.
Instrument connection: G 1/4.
Process connection: G 1/4, 1/4" NPT F.
Body Material :
V - PVC.
Diaphragm material :
A - PTFE.
Filling liquid: silicon oil.

Process fluid temperature		
68 °F **(20 °C)**	*104 °F* **(40 °C)**	*140 °F* **(60 °C)**
150 psi **(10 bar)**	*75 psi* **(5 bar)**	*15 psi* **(1 bar)**

(1) at 68°F (20 °C) process temperature (or state temperature when ordering)

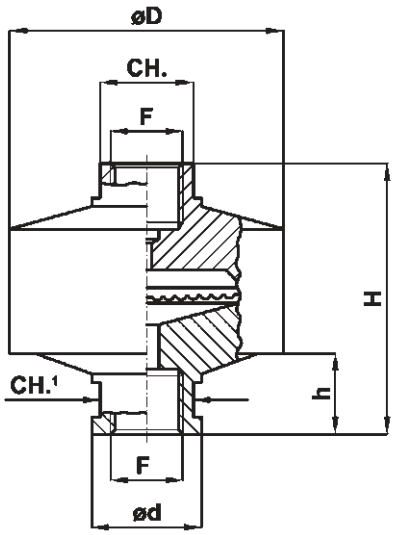

Model	F	D	d	H	h	CH_1	CH
P10	**41F** - G 1/2 **43F** - 1/2-14 NPT F	*3.13* (79,5)	*1.26* (32)	*3.09* (78,5)	*0.93* (23,5)	*1.06* (27)	*1.06* (27)
P63	**21F** - G 1/4 **23F** - 1/4-18 NPT F	*2.34* (59,5)	*0.98* (25)	*2.54* (64,5)	*0.77* (19,5)	*0.87* (22)	*0.67* (17)

dimensions : *inches* (mm)

ASSEMBLING

D - Direct to instrument. All diaphragm seals are mounted on the instruments ad fixed by an aluminium protection label.

OPTIONS

Model	MGS9/P10	MGS9/P63
E - Fluorinated liquid "E" for process fluid temperature *from -40°F to +302°F* (from -40°C +150°C)	◆	◆
G - Food oil "G" for process fluid temperature from *-4°F to +392°F* (-20°C a + 200°C)	◆	◆

"HOW TO ORDER" SEQUENCE

Section/Model/Connection material/Diaphragm material/Process Connection/Instrument connection/Assembling/Options

4	**P10**	**V**	**A**	**41F**	**41F - G 1/2 F**	**D**	**E, G**
	P63			**43F**	**21F - G 1/4 F**		
				21F			
				23F			

IN ORDER TO IMPROVE THEIR PRODUCTION, MESSRS. NUOVA FIMA RESERVE THE RIGHT TO THEMSELVES TO MAKE ALL THE MODIFICATIONS THAT THEY DEEM INDISPENSABLE AT ANY TIME. UPDATED DATA-SHEETS ARE AVAILABLE ON SITE: **www.nuovafima.com**

Copyright © Nuova Fima srl. All rights reserved. Any part of this publication should not be reproduced without a written Nuova Fima's srl approval

NUOVA FIMA USA Inc.
www.nuovafima.com - e-mail: infousa@nuovafima.com
4123 Hollister, Suite G - TX 77080 Houston
TEL. +1 713.690.9800 - FAX +1 713.690.9803

NUOVA FIMA srl
www.nuovafima.com - e-mail: info@nuovafima.com
P.O. BOX 58 - VIA C. BATTISTI 59 - 28045 INVORIO (NO) ITALY
TEL. +39 0322 253200 - FAX +39 0322 253232

NUOVA FIMA S.r.l.
P.O. BOX 58 Via Cesare Battisti, 59
28045 Invorio (NO) Italy
Tel. +39 0322.253200
Fax +39 0322.253232
info@nuovafima.com

www.nuovafima.com

COMPONENT AND ACCESSORIES

NUOVA FIMA

cocks and valves

5.02F - MP3/2F - Three way cock, with a ø 1.57" (ø 40mm) flanged connection for test pressure gauge

Body: brass.
Cylindrical needle plug: brass.
Wheel: brass.
Seal: mechanical.

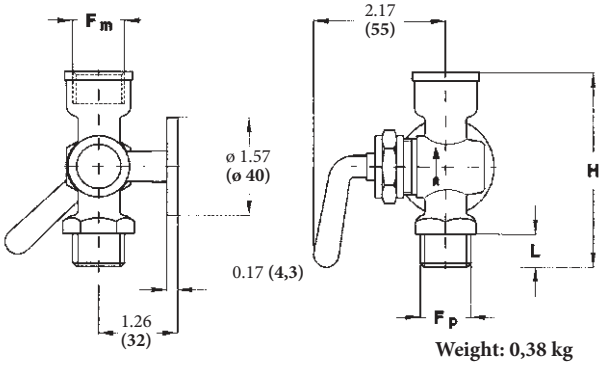

Weight: 0,38 kg

Body	Cod.	Class (PN)	°F (°C)
brass	0	232 psi (16 bar)	+50...+356 (+10...+180)

Cod.	Fp-Fm	L	H
21M x 21F	G 1/4 B M x G 1/4 B F	0.43 (11)	2.64 (67)
31M x 31F	G 3/8 B M x G 3/8 B F	0.51 (13)	2.91 (74)
41M x 41F	G 1/2 B M x G 1/2 B F	0.55 (14)	3.15 (80)

dimensions : inches (mm)

5.330 - MP3/33 - Two way needle valve; DN 1/4"

Body: AISI 316 st.st.
Needle plug: AISI 420 st. with carbon steel body;
AISI 316 st.st. stelite tipped with AISI 316 st.st. body.
Wheel: painted steel plate.
Packing seal: Grafoil.

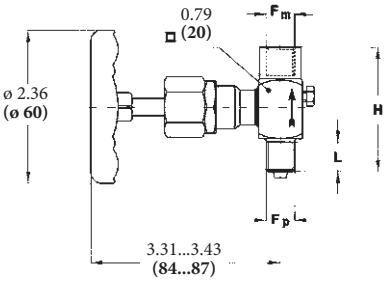

Weight: 0,28 kg

Body	Cod.	Class (PN)	°F (°C)
AISI 316 st.st.	4	2000 psi (150 bar)	+14...+356 (-10...+180)

Cod.	Fp-Fm	L	H
21F x 21F	G 1/4 B F x G 1/4 B F	-	2.36 (60)
21M x 21F	G 1/4 B M x G 1/4 B F	0.59 (15)	2.24 (57)
23F x 23F	1/4" NPT F x 1/4" NPT F	-	2.36 (60)
23M x 23F	1/4" NPT M x 1/4" NPT F	0.59 (15)	2.36 (60)

dimensions : inches (mm)

ISO 9001 : 2008
Cert. nr. 0433/6

Constructive characteristics for 2, 3 ways valves

Body: ASTM A/105 carbon steel, AISI 316 st.st., drop-forged.
Needle plug: AISI 420 st. with ASTM A/105 c. st. body; AISI 316 st.st. stelite tipped with AISI 316 st.st. body.
Seat: AISI 316 st.st.; deposited AISI 316 st.st. for ASTM A/105 c.st. body.
Wheel: ribbed galvanized steel plate.
Gasket seal: Grafoil.

Body	Cod.	Class (PN)	°F (°C)
ASTM A/105 c.st.	3	3600 psi (250 bar)	-4...+570 (-20...+300)
AISI 316 st.st.	4	5800 psi (400 bar)	-22...+570 (-30...+300)

5.340 - MP3/34 - Two ways valve with a bleeding screw, type UNI 4669, UNAV 8828.1, DIN 16270

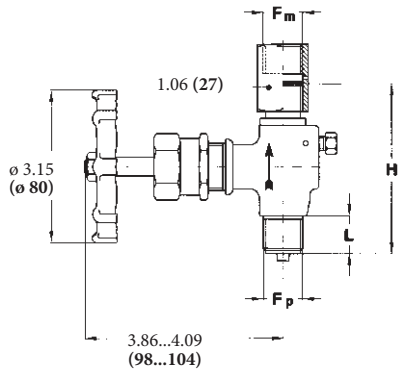

Weight: 0,73 kg

Cod.	Fp-Fm	L	H
21M x 41F	G 1/4 B M x G 1/2 B F (1)	0.67 (17)	3.50 (89)
41M x 41F	G 1/2 B M x G 1/2 B F	0.79 (20)	3.50 (89)

(1) c.st. only

5.34F - Mp3/34F - Three ways valve, with a ø 1.57" (ø 40mm) flanged connection for test pressure gauge and bleeding screw

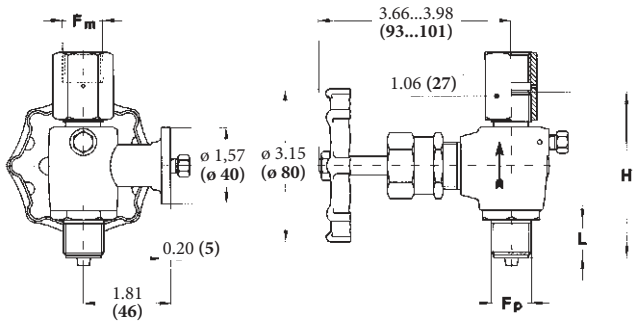

Weight: 1 kg

Cod.	Fp-Fm	L	H
21M x 41F	G 1/4 B M x G 1/2 B F (2)	0.67 (17)	3.46 (88)
41M x 41F	G 1/2 B M x G 1/2 B F	0.79 (20)	3.46 (88)

(2) AISI 316 st.st. only

dimensions : inches (mm)

5.350 - MP3/35 - Three ways valve with threaded connection for test pressure gauges, type UNI 4670, UNAV 8830.1, DIN 16271

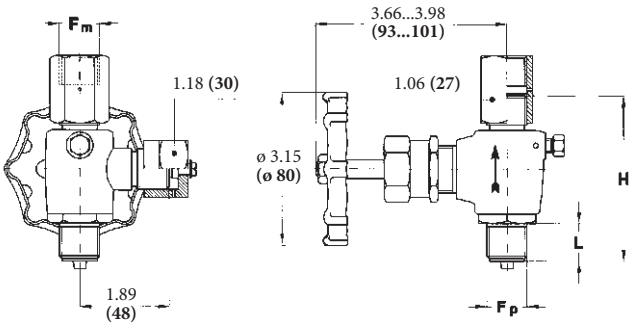

Weight: 1 kg

Cod.	Fp-Fm	L	H
21M x 41F	G 1/4 B M x G 1/2 B F (1)	0.67 (17)	3.46 (88)
41M x 41F	G 1/2 B M x G 1/2 B F	0.79 (20)	3.46 (88)

(1) c.st. only

5.370 - MP3/37 - Two ways valve with bleeding screw

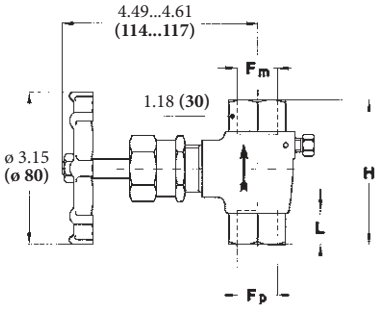

Weight: 0,74 kg

Cod.	Fp-Fm (welding)	L	H
2A0 x 2A0	1/4" x 1/4"	0.67 (17)	3.03 (77)
4A0 x 4A0	1/2" x 1/2"	0.71 (18)	3.03 (77)

dimensions : inches (mm)

5.360 - MP3/36 - Two ways valve with bleeding screw

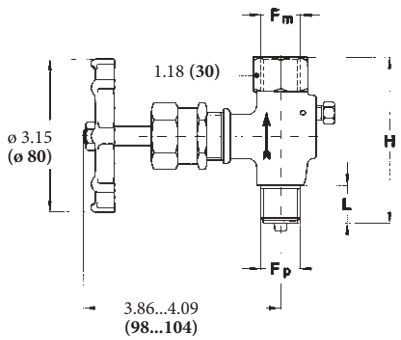

Weight: 0,65 kg

Cod.	Fp-Fm	L	H
21F x 41F	G 1/4 B F x G 1/2 B F	0.67 (17)	3.03 (77)
21M x 41F	G 1/4 B M x G 1/2 B F	0.67 (17)	3.46 (88)
41F x 41F	G 1/2 B F x G 1/2 B F	0.79 (20)	3.03 (77)
41M x 41F	G 1/2 B M x G 1/2 B F	0.79 (20)	3.46 (88)
23F x 43F	1/4" NPT F x 1/2" NPT F	-	3.03 (77)
23M x 43F	1/4" NPT M x 1/2" NPT F	0.67 (17)	3.46 (88)
43F x 43F	1/2" NPT F x 1/2" NPT F	-	3.03 (77)
43M x 43F	1/2" NPT M x 1/2" NPT F	0.79 (20)	3.46 (88)

dimensions : inches (mm)

5.36F - MP3/36F - Three ways valve, with a ø 1.57" (ø 40mm) flanged connection for test pressure gauge and bleeding screw

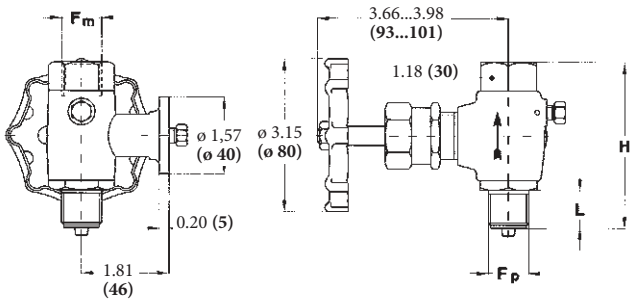

Weight: 0,92 kg

Cod.	Fp-Fm	L	H
21F x 41F	G 1/4 B F x G 1/2 B F	0.67 (17)	3.03 (77)
21M x 41F	G 1/4 B M x G 1/2 B F	0.67 (17)	3.46 (88)
41F x 41F	G 1/2 B F x G 1/2 B F	0.79 (20)	3.03 (77)
41M x 41F	G 1/2 B M x G 1/2 B F	0.79 (20)	3.46 (88)
23F x 43F	1/4" NPT F x 1/2" NPT F	-	3.03 (77)
23M x 43F	1/4" NPT M x 1/2" NPT F	0.67 (17)	3.46 (88)
43F x 43F	1/2" NPT F x 1/2" NPT F	-	3.03 (77)
43M x 43F	1/2" NPT M x 1/2" NPT F	0.79 (20)	3.46 (88)

dimensions : inches (mm)

5.380 - MP3/38 - Two ways angle (90°) valve with bleeding screw

Body	Cod.	Class (PN)	°F (°C)
AISI 316 st.st.	4	5800 psi (400 bar)	-22...+570 (-30...+300)

Cod.	Fp-Fm
41M x 41F	G 1/2 B M x G 1/2 B F
43M x 43F	1/2" NPT M x 1/2" NPT F

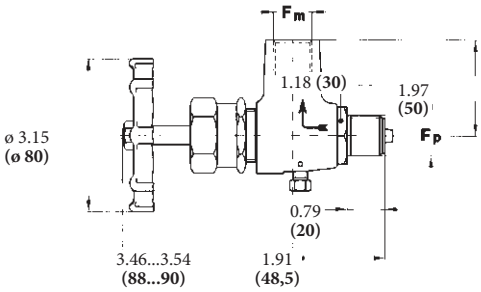

dimensions : inches (mm) Weight: 0,83 kg

5.060 - MP3/6 - Duplex valve

Body: ASTM A/105 carbon steel, AISI 316 st.st., drop-forged.
Needle plug: AISI 420 st. with ASTM A/105 c. st. body; AISI 316 st.st. stelite tipped with AISI 316 st.st. body.
Seat: AISI 316 st.st.
Wheel: ribbed galvanized steel plate.
Gasket seal: Grafoil.
Process connection: 1/2" NPT F.
Drain connection: 1/4" NPT F.

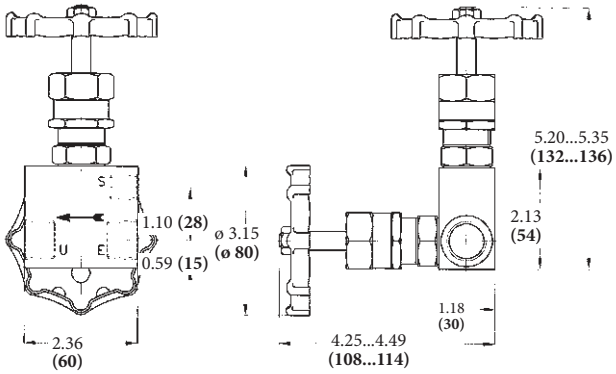

dimensions : inches (mm) Weight: 1,22 kg

Body	Cod.	Class (PN)	°F (°C)
ASTM A/105 c.st.	3	2900 psi (200 bar)	-4...+570 (-20...+300)
AISI 316 st.st.	4	2900 psi (200 bar)	-22...+570 (-30...+300)

5.050 - MP3/5 - By-pass valve

Body: AISI 316 st.st., bar-stock.
Needle plug: AISI 316 st.st. stelite tipped.
Wheel: ribbed galvanized steel plate.
Gasket seal: Grafoil.

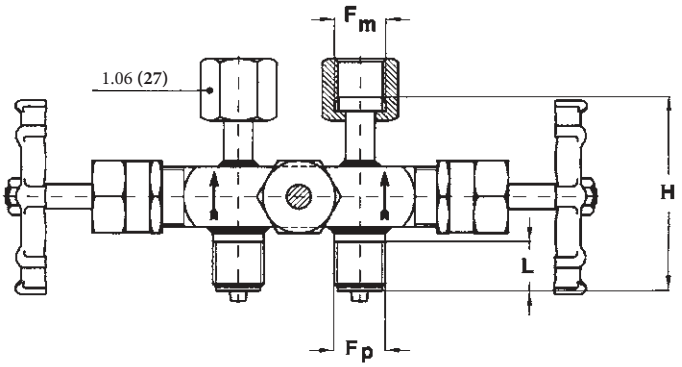

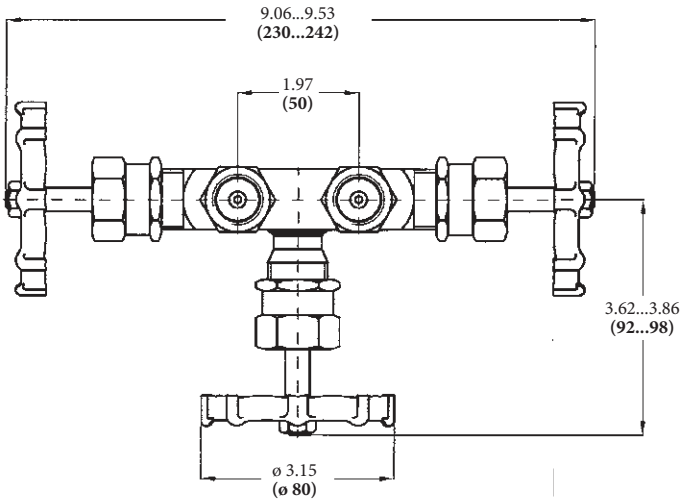

Body	Cod.	Class (PN)	°F (°C)
AISI 316 st.st.	4	2900 psi (200 bar)	+4...+570 (-20...300)

Cod.	Fp-Fm	L	H
21M x 21F	G 1/4 B M x G 1/4 B F	0.67 (17)	3.23 (82)
41M x 41F	G 1/2 B M x G 1/2 B F	0.79 (20)	3.15 (80)
23M x 23F	1/4" NPT M x 1/4" NPT F	0.67 (17)	3.23 (82)
43M x 43F	1/2" NPT M x 1/2" NPT F	0.79 (20)	3.15 (80)

dimensions : inches (mm)

Weight: 1,50 kg

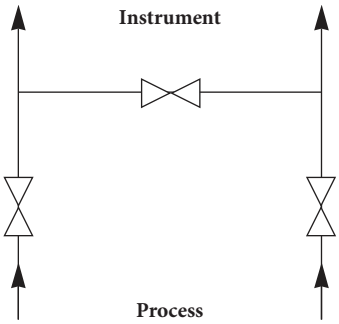

OPTIONS

P07 -	Oxygene service, "all stainless steel" version (1)
P04 -	Tag punching
BTP -	PFTE gasket seal for temperature ≤ 356°F - 180 °C)
TAI -	"all stainless steel" version for AISI 316 st.st. valves (1)

(1) Not available for 5.02F and 5.330 models.

"HOW TO ORDER" SEQUENCE

Section / Model/ Material / Process connection / Instrument connection / Options

5	02F	0	21M, 31M, 41M	21F, 31F, 41F	P02...TAI
	340	3	23M, 43M	23F, 43F	
	34F	4	21F, 41F	2A0, 4A0	
	350		23F, 43F		
	370		2A0, 4A0		
	360				
	380				
	060				
	050				

IN ORDER TO IMPROVE THEIR PRODUCTION, MESSRS. NUOVA FIMA RESERVE THE RIGHT TO THEMSELVES TO MAKE ALL THE MODIFICATIONS THAT THEY DEEM INDISPENSABLE AT ANY TIME. UPDATED DATA-SHEETS ARE AVAILABLE ON SITE: www.nuovafima.com

Copyright © Nuova Fima srl. All rights reserved. Any part of this publication should not be reproduced without a written Nuova Fima's srl approval

NUOVA FIMA USA Inc.
www.nuovafima.com - e-mail: infousa@nuovafima.com
4123 Hollister, Suite G - TX 77080 Houston
TEL. +1 713.690.9800 - FAX +1 713.690.9803

NUOVA FIMA srl
www.nuovafima.com - e-mail: info@nuovafima.com
P.O. BOX 58 - VIA C. BATTISTI 59 - 28045 INVORIO (NO) ITALY
TEL. +39 0322 253200 - FAX +39 0322 253232

BSV/VV-

bar stock needle valve, block and bleed

Technical features

Rating: 6000 psi; or 10000 psi (code **10K**).
Tee-bar: AISI 303 st.st.
Stem: AISI 316 L st.st.
Non-rotating needle: AISI 316 L st.st (code **5**), (or special materials).
Bonnet: AISI 316 L st.st (code **5**), (or special materials).
Packing: PTFE or Graphoil (see chart below).
Nuts: carbon steel.
Line dust cup: Hytrel, blu.
Bonnet seal: AISI 316L st.st. seal.
Valve body and drain plug: AISI 316 L st.st. (code **5**), (or special materials).

Fig. 1 - Sectioned bonnet

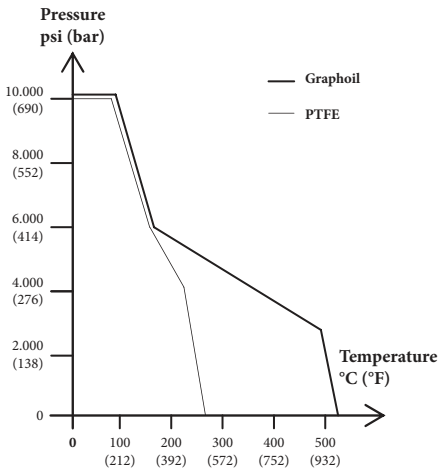

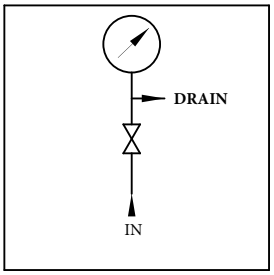

OPTIONS

10K - Rating bonnet : 10000 psi	**LOK** - T-Bar handle locking
ANT - Anti-tamper	**P02** - Oxygen service
E30 - NACE version as per MR 0103/0175-ISO15156	**SMI** - Tag
GRA - Graphoil packing	

5.VVM - BSV/VVM - male process connection

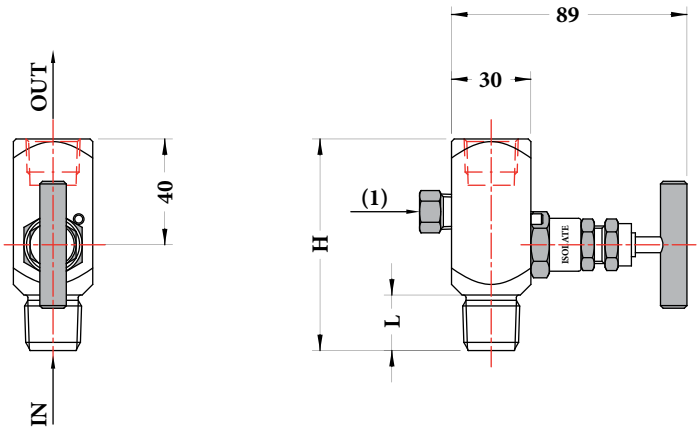

Weight : 0,53 kg

Code	IN-OUT	H	L
43M x 43F	1/2" NPT M x 1/2" NPT F	80	20

(1) Drain 1/4" NPT F with plug

dimensions : mm

5.VVF - BSV/VVF - female process connection

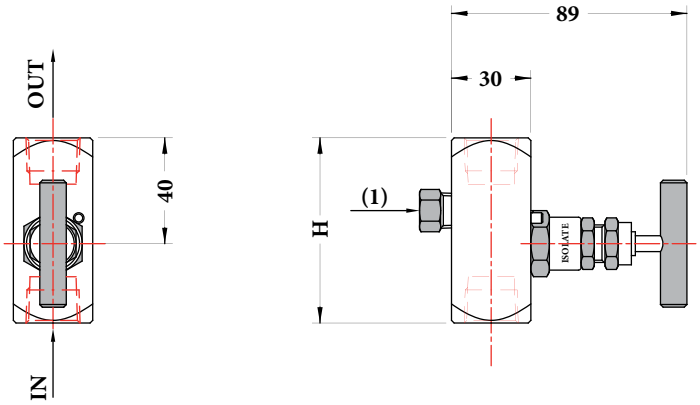

Weight : 0,48 kg

Code	IN-OUT	H
43F x 43F	1/2" NPT F x 1/2" NPT F	70

(1) Drain 1/4" NPT F with plug

dimensions : mm

"HOW TO ORDER" SEQUENCE

Section / Model / Material / Process connection / Instrument connection / Options

5	VVM	5	43M	43F	10K...SMI
	VVF		43F		

IN ORDER TO IMPROVE THEIR PRODUCTION, MESSRS. NUOVA FIMA RESERVE THE RIGHT TO THEMSELVES TO MAKE ALL THE MODIFICATIONS THAT THEY DEEM INDISPENSABLE AT ANY TIME. UPDATED DATA-SHEETS ARE AVAILABLE ON SITE: www.nuovafima.com

Copyright © Nuova Fima srl. All rights reserved. Any part of this publication should not be reproduced without a written Nuova Fima's srl approval

NUOVA FIMA USA Inc.
www.nuovafima.com - e-mail: infousa@nuovafima.com
4123 Hollister, Suite G - TX 77080 Houston
TEL. +1 713.690.9800 - FAX +1 713.690.9803

NUOVA FIMA srl
www.nuovafima.com - e-mail: info@nuovafima.com
P.O. BOX 58 - VIA C. BATTISTI 59 - 28045 INVORIO (NO) ITALY
TEL. +39 0322 253200 - FAX +39 0322 253232

BSV/VM-

bar stock needle valve, block, multiport

Technical features

Rating: 6000 psig; or 10000 psig (code 10K).
Tee-bar: AISI 303 st.st.
Stem: AISI 316 L st.st.
Non-rotating needle: AISI 316 L st.st (code 5), (or special materials).
Bonnet: AISI 316 L st.st (code 5), (or special materials).
Packing: PTFE or Graphoil (see chart below).
Nuts: carbon steel.
Line dust cup: Hytrel, blu.
Bonnet seal: AISI 316L st.st. seal.
Valve body and drain plug: AISI 316 L st.st. (code 5), (or special materials).

Fig. 1 - Sectioned bonnet

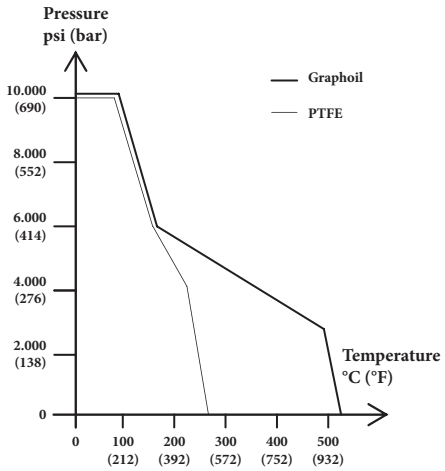

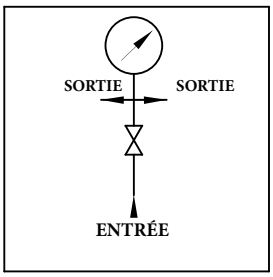

ISO 9001 : 2008
Cert. nr. 0433/6

RC0 - 05/16

5.VMM - BSV/VMM - male process connection

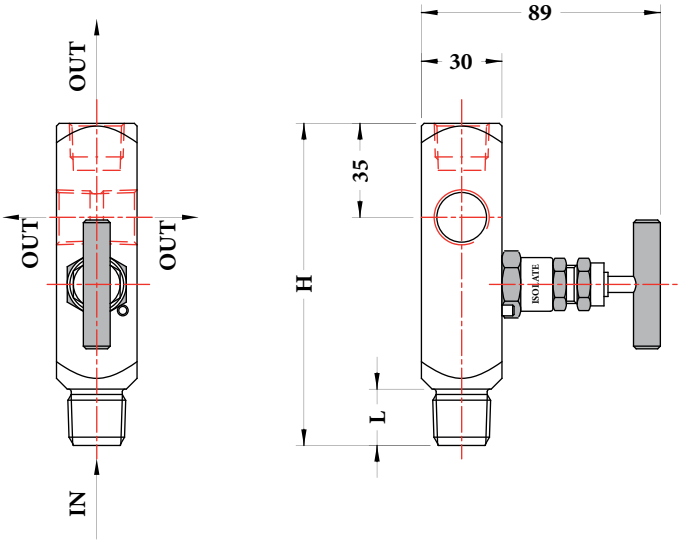

Weight: 0,82 kg.

Code	IN-OUT	H	L
43M x 43F	1/2" NPT M x 1/2" NPT F	120	20

dimensions : mm

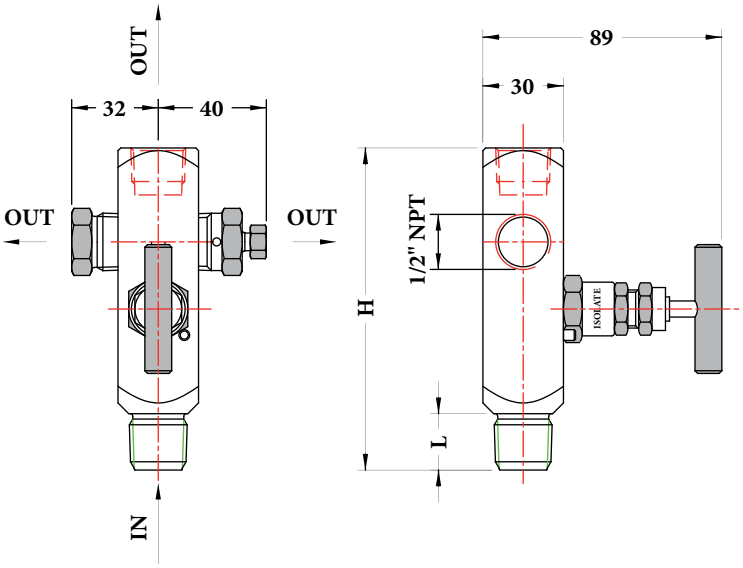

VARIABILI

10K - Rating bonnet : 10000 psi	**LOK** - T-Bar handle locking
ANT - Anti-tamper	**P02** - Oxygen service
E30 - NACE version as per MR 0103/0175-ISO15156	**SMI** - Tag
GRA - Graphoil packing	

"HOW TO ORDER" SEQUENCE

Section / Model / Material / Process connection / Instrument connection / Options

5 VMM 5 43M 43F 10K...SMI

IN ORDER TO IMPROVE THEIR PRODUCTION, MESSRS. NUOVA FIMA RESERVE THE RIGHT TO THEMSELVES TO MAKE ALL THE MODIFICATIONS THAT THEY DEEM INDISPENSABLE AT ANY TIME. UPDATED DATA-SHEETS ARE AVAILABLE ON SITE: www.nuovafima.com

Copyright © Nuova Fima srl. All rights reserved. Any part of this publication should not be reproduced without a written Nuova Fima's srl approval

NUOVA FIMA USA Inc.
www.nuovafima.com - e-mail: infousa@nuovafima.com
4123 Hollister, Suite G - TX 77080 Houston
TEL. +1 713.690.9800 - FAX +1 713.690.9803

NUOVA FIMA srl
www.nuovafima.com - e-mail: info@nuovafima.com
P.O. BOX 58 - VIA C. BATTISTI 59 - 28045 INVORIO (NO) ITALY
TEL. +39 0322 253200 - FAX +39 0322 253232

BSM/M2-

bar stock two-valve manifold, block and bleed

Technical features

Rating: 6000 psig; or 10000 psig (code **10K**).
Tee-bar: AISI 303 st.st.
Stem: AISI 316 L st.st.
Non-rotating needle: AISI 316 L st.st (code **5**), (or special materials).
Bonnet: AISI 316 L st.st (code **5**), (or special materials).
Packing: PTFE or Graphoil (see chart below).
Nuts: carbon steel.
Line dust cup: Hytrel, blu.
Drain dust cup: Hytrel, red.
Bonnet seal: AISI 316L st.st. seal.
Manifold body and drain plug: AISI 316 L st.st. (code **5**), (or special materials).

Fig. 1 - Sectioned bonnet

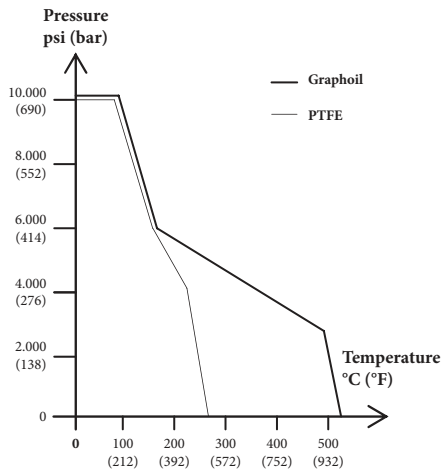

OPTIONS

10K -	Rating bonnet : 10000 psi	**LOK** -	T-Bar handle locking
ANT -	Anti-tamper	**P02** -	Oxygen service
E30 -	NACE version as per MR 0103/0175-ISO15156	**SMI** -	Tag
GRA -	Graphoil packing	**S31** -	2” stake’s bracket for yoke mounting

RC2 - 05/15

5.M2M - BSM/M2M - male process connection

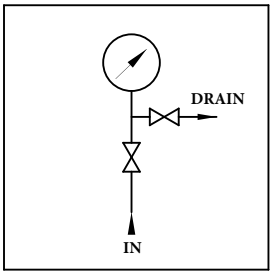

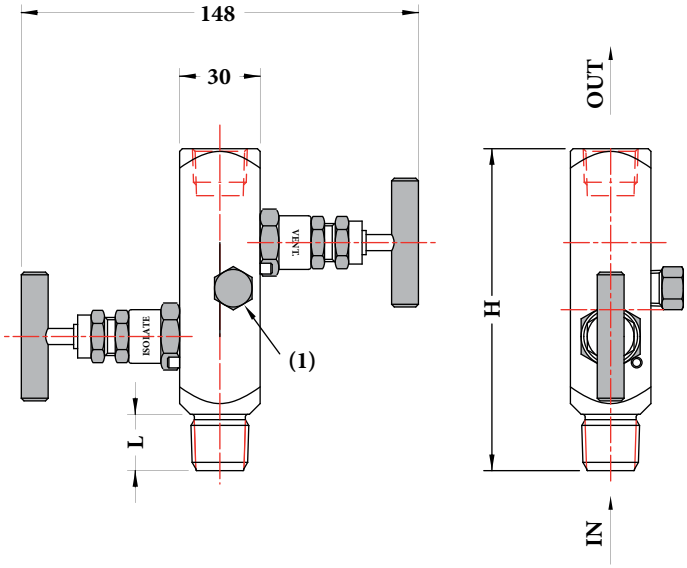

Weight: 0,88 kg

Code	IN-OUT	H	L
43M x 43F	1/2" NPT M x 1/2" NPT F	120	20

(1) Drain 1/4" NPT F with plug

dimensions : mm

5.M2F - BSM/M2F - female process connection

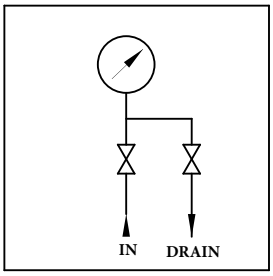

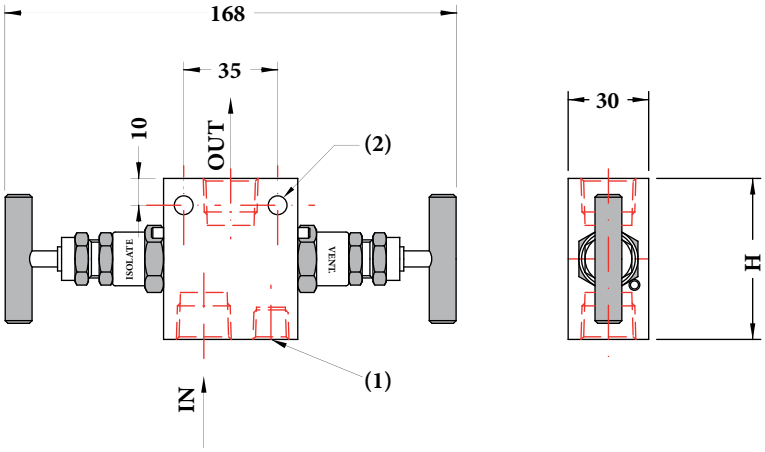

Weight: 0,90 kg

Code	IN-OUT	H
43F x 43F	1/2" NPT F x 1/2" NPT F	60

(1) Drain 1/4" NPT F with plug
(2) No. 2 fixing holes ø 7 mm

dimensions : mm

"HOW TO ORDER" SEQUENCE

Section / Model / Material / Process connection / Instrument connection / Options

5	M2M	5	43M	43F	10K...S31
	M2F		43F		

IN ORDER TO IMPROVE THEIR PRODUCTION, MESSRS. NUOVA FIMA RESERVE THE RIGHT TO THEMSELVES TO MAKE ALL THE MODIFICATIONS THAT THEY DEEM INDISPENSABLE AT ANY TIME. UPDATED DATA-SHEETS ARE AVAILABLE ON SITE: www.nuovafima.com

Copyright © Nuova Fima srl. All rights reserved. Any part of this publication should not be reproduced without a written Nuova Fima's srl approval

NUOVA FIMA USA Inc.
www.nuovafima.com - e-mail: infousa@nuovafima.com
4123 Hollister, Suite G - TX 77080 Houston
TEL. +1 713.690.9800 - FAX +1 713.690.9803

NUOVA FIMA srl
www.nuovafima.com - e-mail: info@nuovafima.com
P.O. BOX 58 - VIA C. BATTISTI 59 - 28045 INVORIO (NO) ITALY
TEL. +39 0322 253200 - FAX +39 0322 253232

BSM/M3A

bar stock three-valve manifold, block and equalizer, direct mounting

Technical features

Rating: 6000 psig; or 10000 psig (code **10K**).
Tee-bar: AISI 303 st.st.
Stem: AISI 316 L st.st.
Non-rotating needle: AISI 316 L st.st (code **5**), (or special materials).
Bonnet: AISI 316 L st.st (code **5**), (or special materials).
Packing: PTFE or Graphoil (see chart below).
Nuts: carbon steel.
Line dust cup: Hytrel, blu.
Equalizer dust cup: Hytrel, green.
Bonnet seal: AISI 316L st.st. seal.
Manifold body and drain plug: AISI 316 L st.st. (code **5**), (or special materials).
Weight: 1,45 kg.

Fig. 1 - Sectioned bonnet

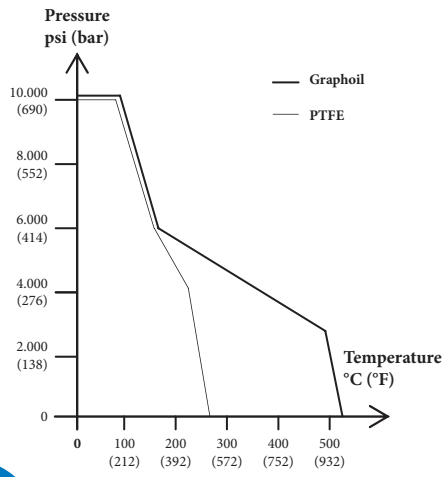

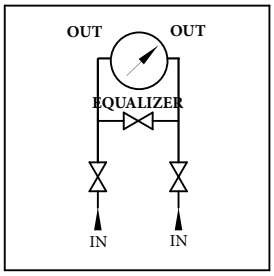

5.M3A - BSM/M3A - male process connection

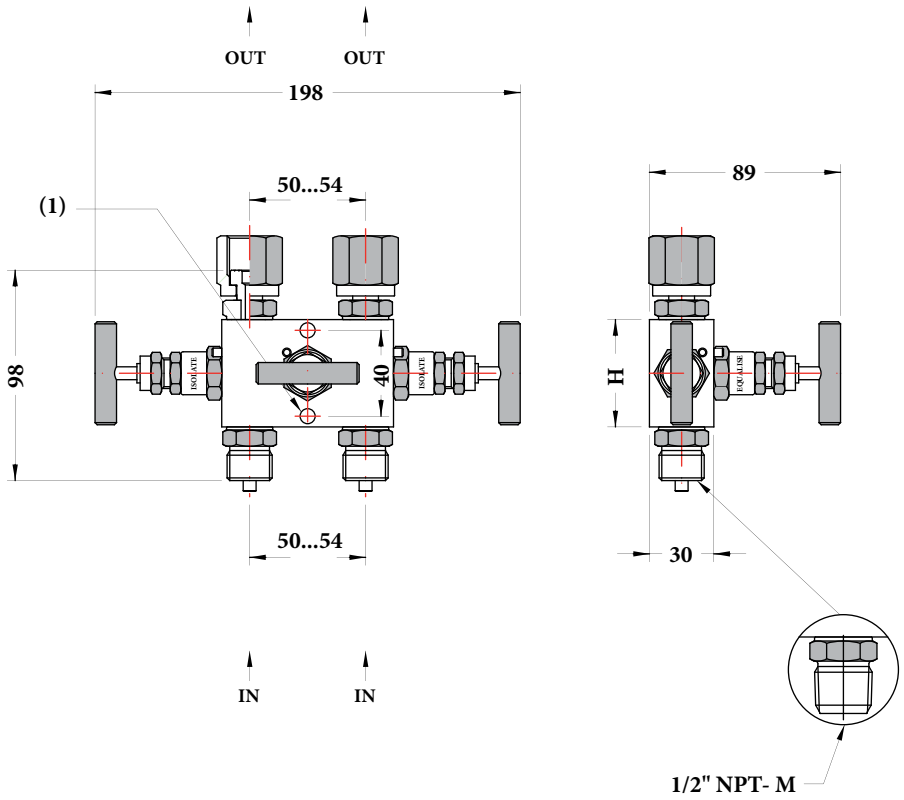

Code	IN-OUT	H	L
41M x 41F	G 1/2" A x G 1/2"	50	20
43M x 41F	1/2" NPT x G 1/2"	50	20

(1) No. 2 fixing holes ø 7 mm

dimensions : mm

OPTIONS

10K - Rating bonnet : 10000 psi	**LOK** - T-Bar handle locking
ANT - Anti-tamper	**P02** - Oxygen service
E30 - NACE version as per MR 0103/0175-ISO15156	**S31** - 2" stake's mounting bracket
GRA - Graphoil packing	**SMI** - Tag

"HOW TO ORDER" SEQUENCE

Section	Model	Material	Process connection	Instrument connection	Interaxis	Options
5	M3A	5	41M	41F	050	10K...SMI
			43M		054	

IN ORDER TO IMPROVE THEIR PRODUCTION, MESSRS. NUOVA FIMA RESERVE THE RIGHT TO THEMSELVES TO MAKE ALL THE MODIFICATIONS THAT THEY DEEM INDISPENSABLE AT ANY TIME. UPDATED DATA-SHEETS ARE AVAILABLE ON SITE: www.nuovafima.com

Copyright © Nuova Fima srl. All rights reserved. Any part of this publication should not be reproduced without a written Nuova Fima's srl approval

NUOVA FIMA USA Inc.
www.nuovafima.com - e-mail: infousa@nuovafima.com
4123 Hollister, Suite G - TX 77080 Houston
TEL. +1 713.690.9800 - FAX +1 713.690.9803

NUOVA FIMA srl
www.nuovafima.com - e-mail: info@nuovafima.com
P.O. BOX 58 - VIA C. BATTISTI 59 - 28045 INVORIO (NO) ITALY
TEL. +39 0322 253200 - FAX +39 0322 253232

BSM/M5F

bar stock five-valve manifold, block, bleed and equalizer, remote mounting

Technical features

Rating: 6000 psig; or 10000 psig (code **10K**).
Tee-bar: AISI 303 st.st.
Stem: AISI 316 L st.st.
Non-rotating needle: AISI 316 L st.st. (code **5**), (or special materials).
Bonnet: AISI 316 L st.st. (code **5**), (or special materials).
Packing: PTFE or Graphoil (see chart below).
Nuts: carbon steel.
Line dust cup: Hytrel, blu..
Drain dust cup: Hytrel, red.
Equalizer dust cup: Hytrel, green.
Bonnet seal: AISI 316 L st.st. seal.
Manifold body and drain plug: AISI 316 L st.st. (code **5**), (or special materials).
Weight: 2,7 kg.

Fig. 1 - Sectioned bonnet

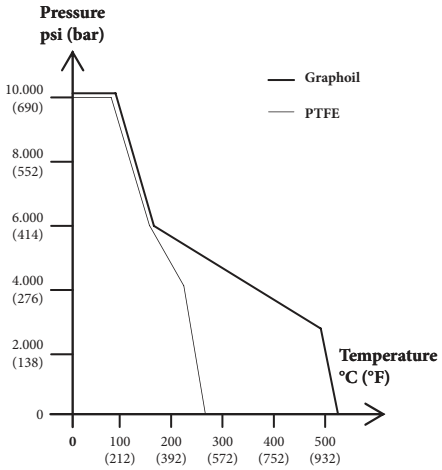

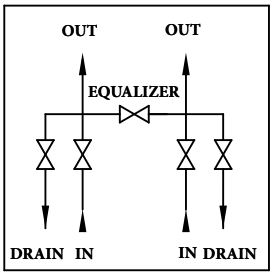

R80 - 05/10

5.M5F - BSM/M5F - female process connection

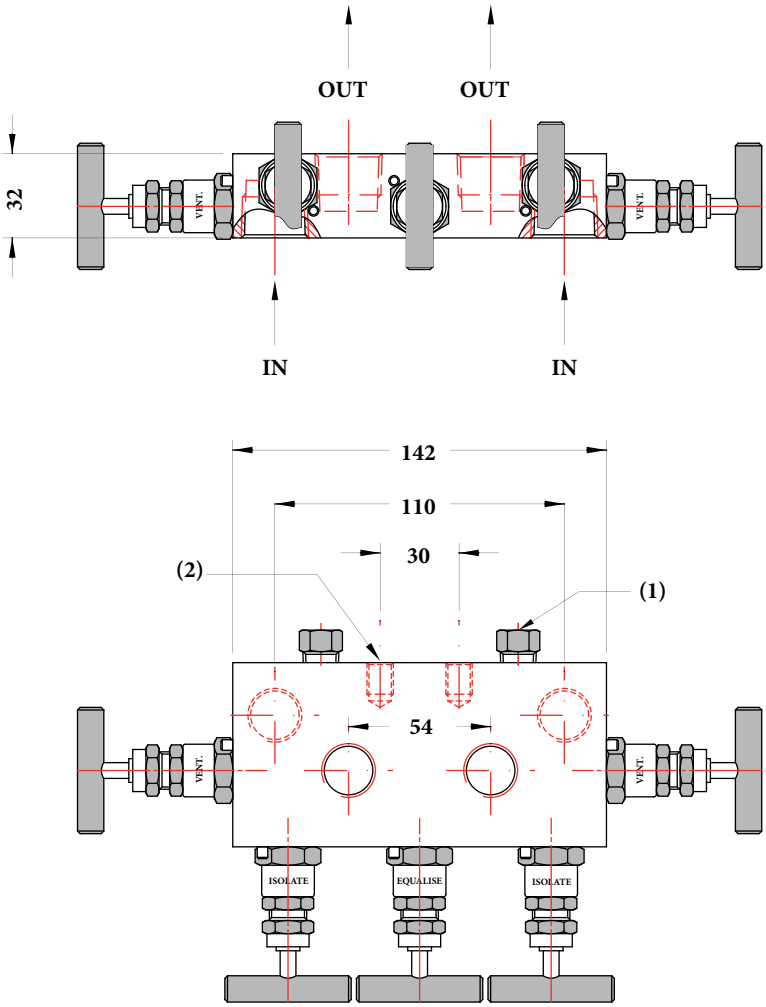

Code	Вход-Выход
43F x 43F	1/2" NPT F x 1/2" NPT F

(1) Drain 1/4" NPT F with plug
(2) No. 2 fixing holes M10

dimensions : mm

OPTIONS

10K - Rating bonnet : 10000 psi	LOK - T-Bar handle locking
ANT - Anti-tamper	P02 - Oxygen service
E30 - NACE version as per MR 0103/0175-ISO15156	S31 - 2" stake's mounting bracket
GRA - Graphoil packing	SMI - Tag

"HOW TO ORDER" SEQUENCE

Section	Model	Material	Process connection	Instrument connection	Interaxis	Options
5	M5F	5	43F	43F	054	10K...SMI

IN ORDER TO IMPROVE THEIR PRODUCTION, MESSRS. NUOVA FIMA RESERVE THE RIGHT TO THEMSELVES TO MAKE ALL THE MODIFICATIONS THAT THEY DEEM INDISPENSABLE AT ANY TIME. UPDATED DATA-SHEETS ARE AVAILABLE ON SITE: www.nuovafima.com

Copyright © Nuova Fima srl. All rights reserved. Any part of this publication should not be reproduced without a written Nuova Fima's srl approval

NUOVA FIMA USA Inc.
www.nuovafima.com - e-mail: infousa@nuovafima.com
4123 Hollister, Suite G - TX 77080 Houston
TEL. +1 713.690.9800 - FAX +1 713.690.9803

NUOVA FIMA srl
www.nuovafima.com - e-mail: info@nuovafima.com
P.O. BOX 58 - VIA C. BATTISTI 59 - 28045 INVORIO (NO) ITALY
TEL. +39 0322 253200 - FAX +39 0322 253232

BSM/M5B

bar stock five-valve manifold, block, bleed and equalizer, direct mounting

Technical features

Rating: 6000 psig; or 10000 psig (code **10K**).
Tee-bar: AISI 303 st.st.
Stem: AISI 316 L st.st.
Non-rotating needle: AISI 316 L st.st (code **5**), (or special materials).
Bonnet: AISI 316 L st.st (code **5**), (or special materials).
Packing: PTFE or Graphoil (see chart below).
Nuts: carbon steel.
Line dust cup: Hytrel, blu..
Drain dust cup: Hytrel, red.
Equalizer dust cup: Hytrel, green.
Bonnet seal: AISI 316L st.st. seal.
Manifold body and drain plug: AISI 316 L st.st. (code **5**), (or special materials).
Weight: 2,8 kg.

Fig. 1 - Sectioned bonnet

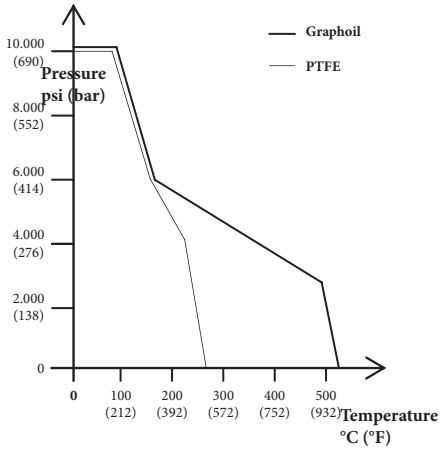

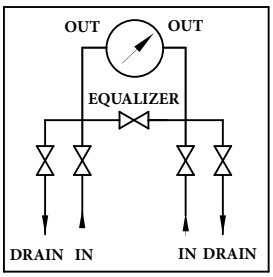

RC2 - 05/15

5.M5B - BSM/M5B - male process connection

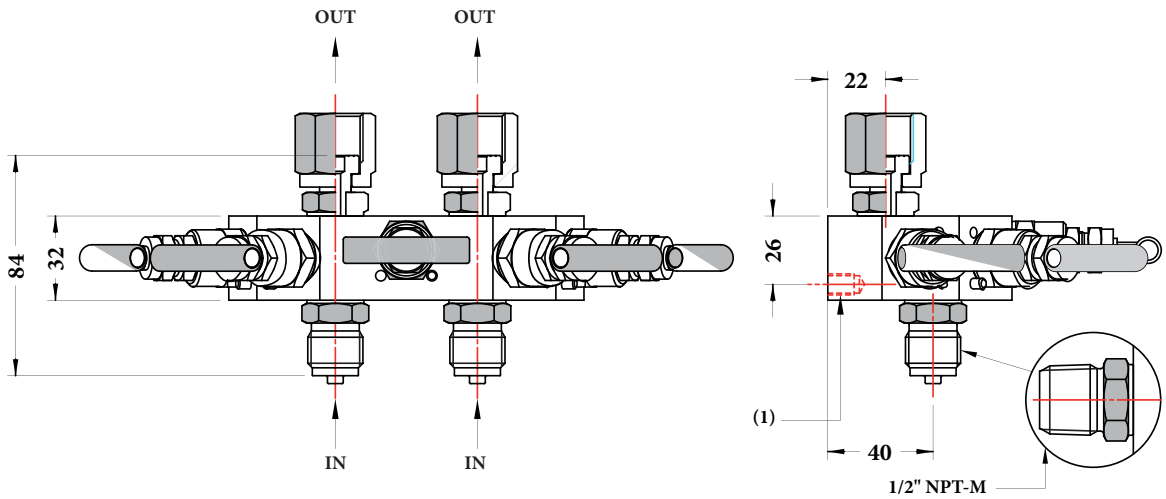

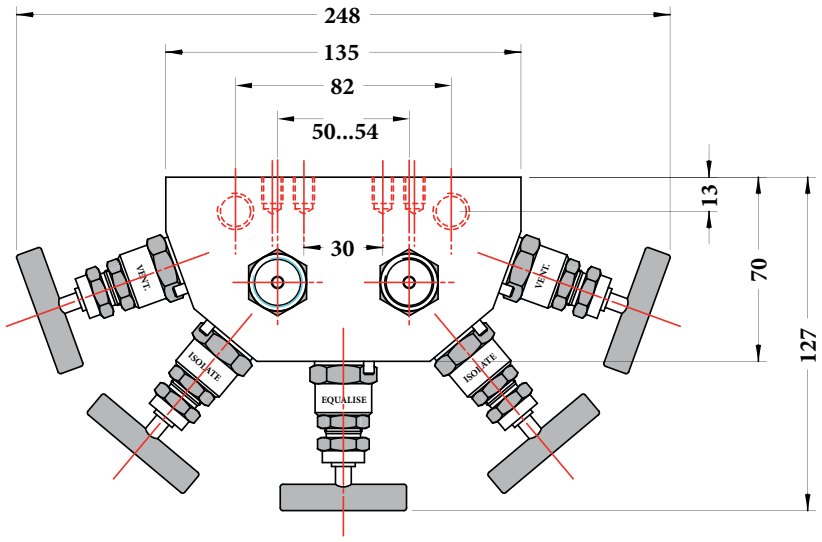

Code	Вход-Выход
41M x 41F	G 1/2 A x G 1/2 swivel
43M x 41F	1/2" NPT M x G 1/2 swivel

(1) No. 4 fixing holes M8 dimensions : mm

OPTIONS

10K - Rating bonnet : 10000 psi	**LOK** - T-Bar handle locking
ANT - Anti-tamper	**P02** - Oxygen service
E30 - NACE version as per MR 0103/0175-ISO15156	**S31** - 2" stake's mounting bracket
GRA - Graphoil packing	**SMI** - Tag

"HOW TO ORDER" SEQUENCE

Section	Model	Material	Process connection	Instrument connection	Interaxis	Options
5	M5B	5	41M 43M	41F	050 054	10K...SMI

Copyright © Nuova Fima srl. All rights reserved. Any part of this publication should not be reproduced without a written Nuova Fima's srl approval

NUOVA FIMA USA Inc.
www.nuovafima.com - e-mail: infousa@nuovafima.com
4123 Hollister, Suite G - TX 77080 Houston
TEL. +1 713.690.9800 - FAX +1 713.690.9803

NUOVA FIMA srl
www.nuovafima.com - e-mail: info@nuovafima.com
P.O. BOX 58 - VIA C. BATTISTI 59 - 28045 INVORIO (NO) ITALY
TEL. +39 0322 253200 - FAX +39 0322 253232

IN ORDER TO IMPROVE THEIR PRODUCTION, MESSRS. NUOVA FIMA RESERVE THE RIGHT TO THEMSELVES TO MAKE ALL THE MODIFICATIONS THAT THEY DEEM INDISPENSABLE AT ANY TIME. UPDATED DATA-SHEETS ARE AVAILABLE ON SITE: www.nuovafima.com

MP4/5-7

dampeners

Designed to protect pressure measuring instruments from pulsating pressure applications. Sudden pressure changes are damped before they reach the sensing element, protecting it from high stress. This make easier reading and helps to prolong the life of the instrument.

5.450 - MP4/5 - needle dampener

Nominal pressure: *6000 psi* (400 bar).
Working temperature: *-13...+392 °F* (-25...+200°C).
Operation principle: variable section.
Adjustment screw: AISI 316 st.st.
Body and wetted parts: brass (**Cod. 0**) or AISI 316 st.st. (**Cod. 4**)
Gaskets: VITON.
Connections (process-instrument):
G 1/4 B M x G 1/4 B F;
1/4" NPT M x 1/4" NPT F;
G 1/2 B M x G 1/2 B F;
1/2" NPT M x 1/2" NPT F.

5.470 - MP4/7 - porous dampener

Nominal pressure: *15000 psi* (1000 bar).
Working temperature: *-58...+752 °F* (-50...+400°C).
Operation principle: porous metal filter disc.
Porous disc: bronze (**Cod. PB8**) or AISI 316 st.st. (**Cod. PAG**)
Body and wetted parts: brass (**Cod. 0**) or AISI 316 st.st. (**Cod. 4**)
Connections (process-instrument):
G 1/4 B M x G 1/4 B F;
1/4" NPT M x 1/4" NPT F;
G 1/2 B M x G 1/2 B F;
1/2" NPT M x 1/2" NPT F.

RC2 - 03/2015

MP4/5

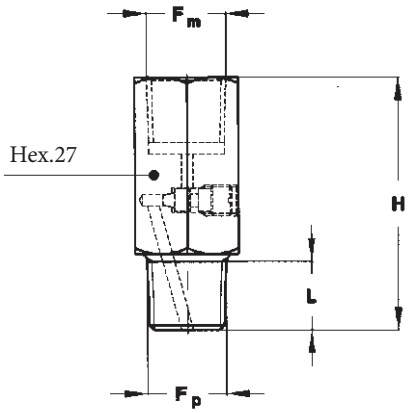

Weight : *0.5 lbs* (0,23 kg)

MP4/7

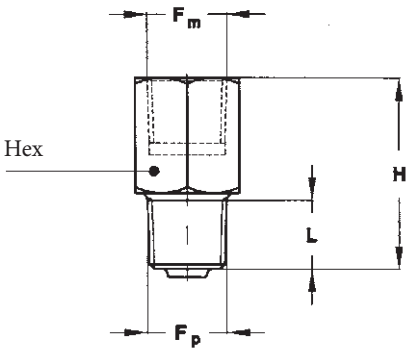

Weight : *0.33 lbs* (0,15 kg)

dimensions : *inches* (mm)

Fp-Fm	L	H
21M x 21F G 1/4 B M x G 1/4 B F	*0.61* (15,5)	*2.60* (66)
23M x 23F 1/4" NPT M x 1/4" NPT F	*0.61* (15,5)	*2.60* (66)
41M x 41F G 1/2 B M x G 1/2 B F	*0.79* (20)	*2.60* (66)
43M x 43F 1/2" NPT M x 1/2" NPT F	*0.79* (20)	*2.60* (66)

Fp-Fm	L	H	Hex
21M x 21F G 1/4 B M x G 1/4 B F	*0.69* (17,5)	*1.48* (37,5)	*0.67* (17)
23M x 23F 1/4" NPT M x 1/4" NPT F	*0.69* (17,5)	*1.48* (37,5)	*0.67* (17)
41M x 41F G 1/2 B M x G 1/2 B F	*0.79* (20)	*1.87* (47,5)	*1.06* (27)
43M x 43F 1/2" NPT M x 1/2" NPT F	*0.79* (20)	*1.87* (47,5)	*1.06* (27)

POROUS DISC

Material	Use	MP4/7 - brass	MP4/7 - AISI316
Bronze	oil	◆	
Bronze	water	◆	
Bronze	air	◆	
AISI 316 st.st.	air		◆

"HOW TO ORDER" SEQUENCE

Section / Model/ Material / Process connection / Instrument connection / Porous disk

5	**450**	**0**	**21M, 41M**	**21F, 41F**	**---**
	470	**4**	**23M, 43M**	**23F, 43F**	**PB8, PAG**

IN ORDER TO IMPROVE THEIR PRODUCTION, MESSRS. NUOVA FIMA RESERVE THE RIGHT TO THEMSELVES TO MAKE ALL THE MODIFICATIONS THAT THEY DEEM INDISPENSABLE AT ANY TIME. UPDATED DATA-SHEETS ARE AVAILABLE ON SITE: **www.nuovafima.com**

Copyright © Nuova Fima srl. All rights reserved. Any part of this publication should not be reproduced without a written Nuova Fima's srl approval

NUOVA FIMA USA Inc.
www.nuovafima.com - e-mail: infousa@nuovafima.com
4123 Hollister, Suite G - TX 77080 Houston
TEL. +1 713.690.9800 - FAX +1 713.690.9803

NUOVA FIMA srl
www.nuovafima.com - e-mail: info@nuovafima.com
P.O. BOX 58 - VIA C. BATTISTI 59 - 28045 INVORIO (NO) ITALY
TEL. +39 0322 253200 - FAX +39 0322 253232

adjustable overload protection devices

These devices are used to protect pressure gauges and pressure switches from overpressure. If, due to occasional faults, the pressure exceeds the maximum allowed value, the device automatically by-passes the gauge until the pressure value is back to normal.

5.4LB...C - MP4/9L - vertical piston overload protection device

Setting range:
230...500 psi (16...35 bar) - **Cod. 4LB**;
500...1450 psi (35...100 bar) - **Cod. 4LC**.
Resetting value: -10% of setting value.
Working temperature: *-13...+212 °F* (-25...+100° C).
Maximum working pressure: *3626 psi* (250 bar).
Operating principle: vertical piston.
Body, piston and wetted parts: AISI 316L st.st. (**Cod. 5**); Monel 400 (**Cod. 6**) (1).
Gaskets: VITON.
Connections (process-instrument):
G 1/2 B M x G 1/2 B F;
1/2" NPT M x 1/2" NPT F.

(1) other materials upon request.

5.49A...D - MP4/9H - piston overload protection device

Setting range:
40...230 psi (3...16 bar) - **Cod. 49A**;
230...500 psi (16...35 bar) - **Cod. 49B**;
500...2300 psi (35...160 bar) - **Cod. 49C**;
2300...5000 psi (160...350 bar) - **Cod. 49D**.
Resetting value: -30% of setting value.
Working temperature: *-13...+212 °F* (-25...+100° C).
Maximum working pressure: *7000 psi* (500 bar).
Operating principle: horizontal piston.
Body, piston and wetted parts: AISI 316L st.st. (**Cod. 5**) (1).
Gaskets: VITON.
Connections (process-instrument):
G 1/2 B M x G 1/2 B F;
1/2" NPT M x 1/2" NPT F;
G 1/4 B M x G 1/4 B F;
1/4" NPT M x 1/4" NPT F .

(1) other materials upon request.

MP4/9L

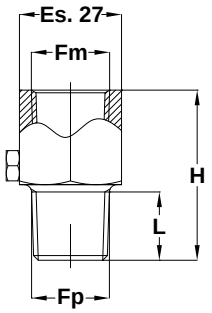

Weight : *0.33 lbs* (0,15 kg)

MP4/9H

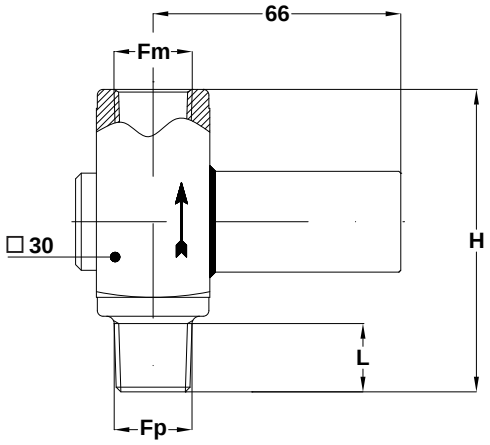

Weight : *1.10 lbs* (0,50 kg)

dimensions : *inches* (mm)

Cod.	Fp-Fm	L	H
41M x 41F	G 1/2 B M x G 1/2 B F	*0.78* (20)	*1.77* (45)
43M x 43F	1/2" NPT M x 1/2" NPT F	*0.78* (20)	*1.77* (45)

Cod.	Fp-Fm	L	H
41M x 41F	G 1/2 B M x G 1/2 B F	*0.78* (20)	*3.14* (80)
43M x 43F	1/2" NPT M x 1/2" NPT F	*0.78* (20)	*3.14* (80)
21M x 21F	G 1/4 B M x G 1/4 B F	*0.59* (15)	*2.95* (75)
23M x 23F	1/4" NPT M x 1/4" NPT F	*0.59* (15)	*2.95* (75)

"HOW TO ORDER" SEQUENCE

Section / Model/ Material / Process connection / Instrument connection / Options

5	**4LB**	**5**	**21M, 41M**	**21F, 41F**
	4LC	**6**	**23M, 43M**	**23F, 43F**
	49A			
	49B			
	49C			
	49D			

IN ORDER TO IMPROVE THEIR PRODUCTION, MESSRS. NUOVA FIMA RESERVE THE RIGHT TO THEMSELVES TO MAKE ALL THE MODIFICATIONS THAT THEY DEEM INDISPENSABLE AT ANY TIME. UPDATED DATA-SHEETS ARE AVAILABLE ON SITE: **www.nuovafima.com**

Copyright © Nuova Fima srl. All rights reserved. Any part of this publication should not be reproduced without a written Nuova Fima's srl approval

NUOVA FIMA USA Inc.
www.nuovafima.com - e-mail: infousa@nuovafima.com
4123 Hollister, Suite G - TX 77080 Houston
TEL. +1 713.690.9800 - FAX +1 713.690.9803

NUOVA FIMA srl
www.nuovafima.com - e-mail: info@nuovafima.com
P.O. BOX 58 - VIA C. BATTISTI 59 - 28045 INVORIO (NO) ITALY
TEL. +39 0322 253200 - FAX +39 0322 253232

MP5

pig tails and siphons

PED 2014/68/EU

The pig tails and coil siphons are used for measurement of pressure with vapour and are mounted between the instrument (pressure gauge, pressure switch, pressure transmitter) and the process. A part of the pipe remain always filled of condensation and this avoid the direct contact between the high temperature vapour and the instrument. Another use of these accessories is the heating dispersion, this avoid also to the instrument to work at dangerous temperature.

Nominal pressure:
A106 gr. B carbon steel (Cod.E): *3000 psi @ 68 °F ... 2000 psi @ 800 °F* (200 bar @ 20 °C ... 150 bar @ 430 °C).
AISI 316 L stainless steel (Cod. 5): *4000 psi @ 68 °F ... 2000 psi @ 850 °F*(260 bar @ 20 °C ... 135 bar @ 450 °C).
Pipe dimensions: 0.84 x 0.55", sch. 80 XS (21,34 x 13,88 mm).
Process connection - Instrument connection:
G 1/2 B M x G 1/2 B F (Cod. **41M** x **41F**);
1/2" NPT M x 1/2" NPT F (Cod. **43M** x **43F**).

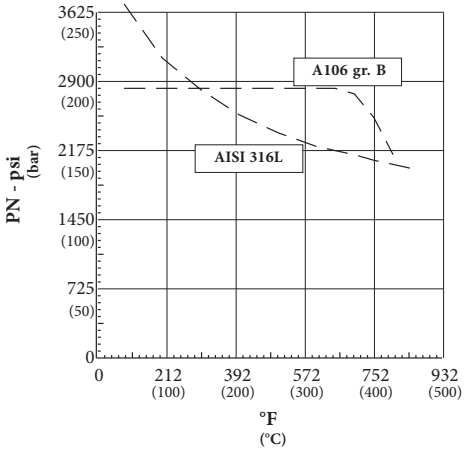

5.520 - **MP 5/2** - A106 gr. B
5.530 - **MP 5/3** -
AISI 316L st. st.

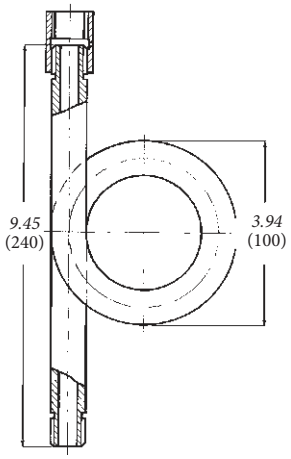

Weight *1.87 lbs*
(0,85 kg)

5.522 - **MP 5/22** - A106 gr. B
5.533 - **MP 5/33** -
AISI 316L st. st.

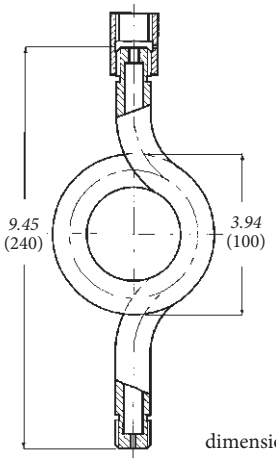

Weight *2.09 lbs*
(0,95 kg)

5.550 - **MP 5/5** -
A106 gr. B
5.560 - **MP 5/6** -
AISI 316L st. st.

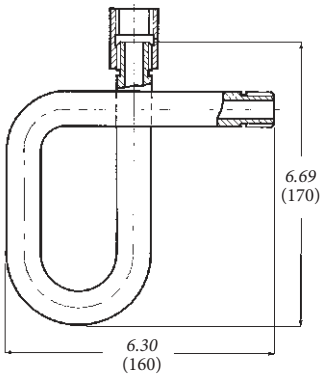

Weight *1.73 lbs*
(0,80 kg)

5.555 - **MP 5/55** - A106 gr. B
5.566 - **MP 5/66** -
AISI 316L st. st.

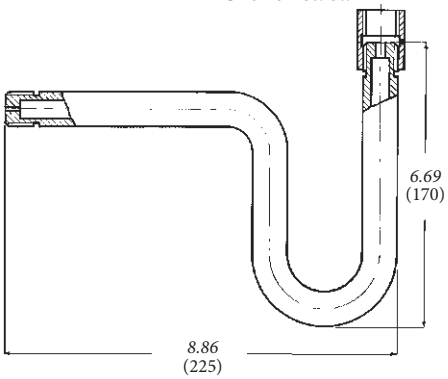

Weight *1.73 lbs*
(0,80 kg)

dimensions : *inches* (mm)

ISO 9001 : 2008
Cert. nr. 0433/6

Material: AISI 316L stainless steel (**Cod. 5**).
Nominal pressure:
1800 psi @ 68 °F ... 1000 psi @ 850 °F
(120 bar @ 20 °C ... 65 bar @ 450 °C)
for connections G 1/4 B M/F and 1/4" NPT M/F;
1300 psi @ 68 °F ... 700 psi @ 850 °F
(90 bar @ 20 °C ... 50 bar @ 450 °C)
for connections G 1/2 B M/F and 1/2" NPT M/F
Pipe dimensions:
ø 0.28 x 0.20" (ø 7 x 5 mm)
for connections G 1/4 B M/F e 1/4" NPT M/F
ø 0.35 x 0.28" (ø 9 x 7 mm)
for connections G 1/2 B M/F e 1/2" NPT M/F
Instrument connection - process connection:
G 1/4 B M/F; 1/4" NPT M/F; G 1/2 B M/F; 1/2" NPT M/F.

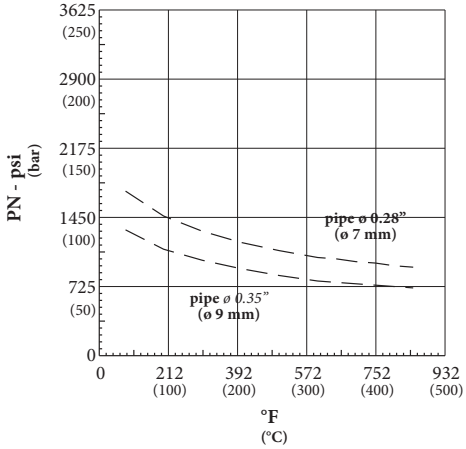

5.510 - MP5/1

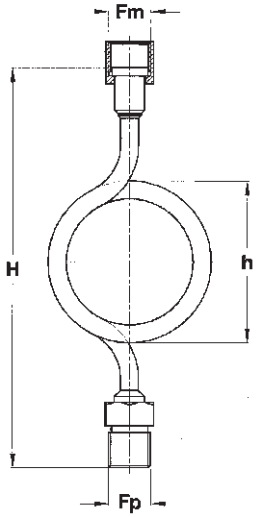

Cod.	Fp-Fm	H	h	Weight : *lbs* (kg)
21M x 21F	G 1/4 B M X G 1/4 B F	*5.91* (150)	*2.56* (65)	*0.22* (0,100)
23M x 23F	1/4" NPT M X 1/4" NPT F	*5.91* (150)	*2.56* (65)	*0.22* (0,100)
41M x 41F	G 1/2 B M X G 1/2 B F	*7.87* (200)	*3.15* (80)	*0.5* (0,230)
43M x 43F	1/2" NPT M X 1/2" NPT F	*7.87* (200)	*3.15* (80)	*0.5* (0,230)

dimensions : *inches* (mm)

"HOW TO ORDER" SEQUENCE

Section / Model/ Material / Process connection / Instrument connection / Options

5	510	E	21M, 41M	21F, 41F
	520	5	23M, 43M	23F, 43F
	522			
	530			
	533			
	550			
	555			
	560			
	566			

IN ORDER TO IMPROVE THEIR PRODUCTION, MESSRS. NUOVA FIMA RESERVE THE RIGHT TO THEMSELVES TO MAKE ALL THE MODIFICATIONS THAT THEY DEEM INDISPENSABLE AT ANY TIME. UPDATED DATA-SHEETS ARE AVAILABLE ON SITE: **www.nuovafima.com**

Copyright © Nuova Fima srl. All rights reserved. Any part of this publication should not be reproduced without a written Nuova Fima's srl approval

NUOVA FIMA USA Inc.
www.nuovafima.com - e-mail: infousa@nuovafima.com
4123 Hollister, Suite G - TX 77080 Houston
TEL. +1 713.690.9800 - FAX +1 713.690.9803

NUOVA FIMA srl
www.nuovafima.com - e-mail: info@nuovafima.com
P.O. BOX 58 - VIA C. BATTISTI 59 - 28045 INVORIO (NO) ITALY
TEL. +39 0322 253200 - FAX +39 0322 253232

NUOVA FIMA S.r.l.
P.O. BOX 58 Via Cesare Battisti, 59
28045 Invorio (NO) Italy
Tel. +39 0322.253200
Fax +39 0322.253232
info@nuovafima.com

www.nuovafima.com

MEASURING INSTRUMENTS - STRUMENTI PER MISURARE

THERMOMETERS

NUOVA FIMA

TB7

bi-metal thermometers
DS 2.5", 3", 4",5"
(63-80-100-125 mm)

These instruments are designed for use in chemical, petrolchemical processing industries. They are built to resist the most severe operating conditions created by the environment and the process medium. An Argonarc welded case/bulb strengthens the whole construction.

6.TB7 - Standard Model

Designation: EN 13190.
Accuracy class: 2 as per EN 13190, measuring range.
Indication ranges: *0...+1000 °F* (-20...+500 C).
Measuring ranges: *+15...+840 °F* (-10...+450 C).
Overtemperature limit: 10% of full scale range for temperature *750 °F* (400 C); max *930 °F* (500 C).
Ambient temperature: *-13...+149 °F* (-25...+65 C).
Max working pressure: *200 psi* - 15 bar (without thermowell).
Protection degree: IP 55 as per EN 60529/IEC 529.
Process connection: stainless steel.

Bulb: *ø 0.24 (cod. 4), ø 0.31" (cod. 5)* (6-8 mm) AISI 316 st. st.
Bulb length: *3.94-5.91-7.87-9.84"* (100 - 150 - 200 - 250 mm)
Measurement element: bi-metal spiral shaped.
Case: stainless steel.
Ring: stainless steel, crimped.
Window: plexiglas.
Dial: aluminium, white with black markings.
Pointer: not adjustable, aluminium, black.

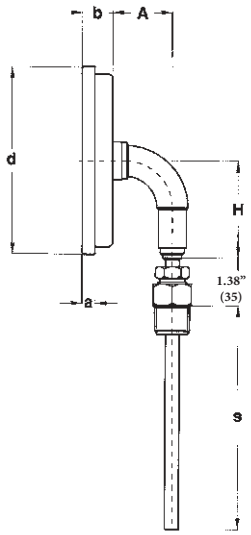

DS	a	b	d	A	H
D 3" (80)	0.32" (8,2)	0.67" (17)	3.13" (79,5)	1.36" (34,5)	2.09" (53)
E 4" (100)	0.29" (7,4)	0.71" (18)	4.32" (109,8)	1.36" (34,5)	2.09" (53)
F 5" (125)	0.26" (6,5)	0.65" (16,5)	5.09" (129,2)	1.36" (34,5)	2.64" (67)

dimensions : *inches* (mm)

F	Hex.	h
41M G 1/2 A	0.87" (22)	0.55" (14)
43M 1/2-14 NPT	0.87" (22)	0.67" (17)

DS 3-4-5" (80-100-125 mm)

1 - Lower connection

0 - Without threaded connection

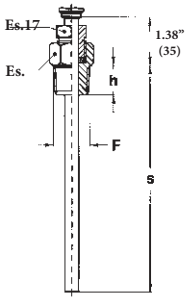

9 - Sliding male and swivel nut

ISO 9001 : 2008
Cert. nr. 0433/6

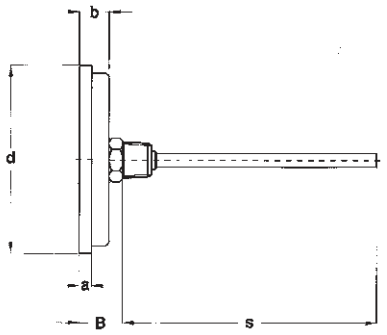

DS 2.5-3-4-5" (63-80-100-125 mm)

4 - Back connection

DS	a	b	d	B
C 2.5" (63)	0.23" (5,8)	0.51" (13)	2.67" (67,9)	0.83" (21)
D 3" (80)	0.32" (8,2)	0.67" (17)	3.13" (79,5)	0.98" (25)
E 4" (100)	0.29" (7,4)	0.70" (17,7)	4.32" (109,8)	1.01" (25,7)
F 5" (125)	0.26" (6,5)	0.65" (16,5)	5.09" (129,2)	0.96" (24,5)

0 - Without threaded connection

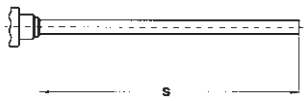

3 - Fixed male

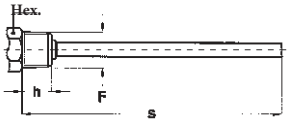

F	Hex.	h
41M G 1/2 A	0.87" (22)	0.55" (14)
43M 1/2-14 NPT	0.87" (22)	0.67" (17)
21M G 1/4 A	0.67" (17)	0.47" (12)

dimensions : *inches* (mm)

9 - Sliding male and swivel nut

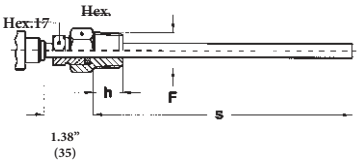

F	Hex.	h
41M G 1/2 A	0.87" (22)	0.55" (14)
43M 1/2-14 NPT	0.87" (22)	0.67" (17)

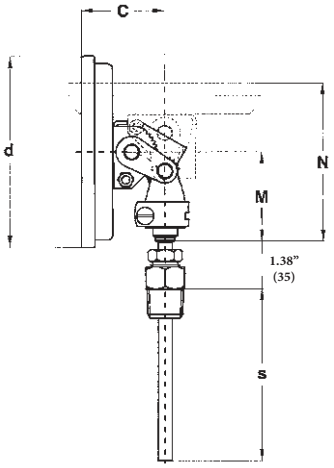

DS		d	C	M	N
E	4" (100)	4.32" (109,8)	1.88" (47,7)	2.03" (51,5)	3.59" (91,2)
F	5" (125)	5.09" (129,2)	1.83" (46,5)	2.03" (51,5)	3.54" (90)

F	Hex.	h
41M G 1/2 A	0.87" (22)	0.55" (14)
43M 1/2-14 NPT	0.87" (22)	0.67" (17)

dimensions : *inches* (mm)

DS 4-5" (100-125 mm)

9 - Every angle connection

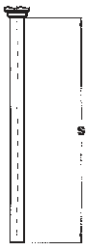

0 - Without threaded connection

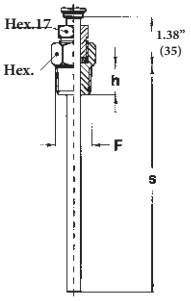

9 - Sliding male, swivel nut

"HOW TO ORDER" SEQUENCE

Section / Model /Mounting / Connection type / Diameter / Range / Process connection / Bulb type and length / Options

6	TB7	1	0	C	41M	4
		4	1	D	43M	5
		9	3	E	21M	
			9	F		

Copyright © Nuova Fima srl. All rights reserved. Any part of this publication should not be reproduced without a written Nuova Fima's srl approval

NUOVA FIMA USA Inc.
www.nuovafima.com - e-mail: infousa@nuovafima.com
4123 Hollister, Suite G - TX 77080 Houston
TEL. +1 713.690.9800 - FAX +1 713.690.9803

NUOVA FIMA srl
www.nuovafima.com - e-mail: info@nuovafima.com
P.O. BOX 58 - VIA C. BATTISTI 59 - 28045 INVORIO (NO) ITALY
TEL. +39 0322 253200 - FAX +39 0322 253232

RB2 - 03/13

IN ORDER TO IMPROVE THEIR PRODUCTION, MESSRS. NUOVA FIMA RESERVE THE RIGHT TO THEMSELVES TO MAKE ALL THE MODIFICATIONS THAT THEY DEEM INDISPENSABLE AT ANY TIME. UPDATED DATA-SHEETS ARE AVAILABLE ON SITE: www.nuovafima.com

TB8

bi-metal thermometers
all stainless steel construction
DS 4", 5", 6" (100-125-150 mm)

ATEX 2014/34/UE

These instruments are designed for use in chemical, petrolchemical processing industries. They are built to resist the most severe operating conditions created by the ambient environment and the process medium. An TIG welded case/bulb strengthens the whole construction. A leak tight fit is ensured if the instrument is filled with a dampening fluid to prevent damage due to vibration.

6.TB8 - Standard Model

Designation: EN 13190.
Indication ranges: *-80...+1000 °F* (-50...+600 °C).
Measuring ranges: *-60...+900 °F* (-40...+500 °C); *-60...<+840 °F* (-40...+450 °C) continuous; *+840...900 °F* (+450...500 °C) intermittent only.
Accuracy class: 1 as per EN 13190, measuring range.
Overtemperature limit: 30% of full scale range for temperature ≤ *750 °F* (400 °C); max *900 °F* (500 °C).
Special overtemperature (option F02): 100% of full scale range for temperature ≤ *300 °F* (150 °C); 50% of full scale range for temperature from *+300...550 °F* (+150...300 °C).
Ambient temperature: *-22...+149 °F* (-40...+65 °C).
Max working pressure: *200 psi* - 15 bar (without thermowell).
Protection degree: IP 55 as per EN 60529/IEC 529.
Process connection: AISI 316 st.st.

Bulb: ø *0.24" (cod. 6), ø 0.25" (cod. 7), ø 0.31" (cod. 8), ø 0.38" (cod. 9)* (ø 6-6,4-8-9,6 mm) AISI 316 st. st.
Immersion length:
from *5.91"* to *27.55"* (from 150 to 700 mm)
for bulbs ø *0.24-0.25"* (6-6,4 mm);
from *3.94"* to *35.43"* (from 100 to 900 mm)
for bulbs ø *0.31-0.38"* (8-9,6 mm) and ranges ≤ *600 °F* (300 °C);
from *5.91"* to *35.43"* (from 150 to 900 mm)
for bulbs ø *0.31-0.38"* (8-9,6 mm) and ranges > *600 °F* (300 °C)
(other lengths available upon request)
Measuring element: bi-metal spiral shaped.
Case: stainless steel.
Ring: stainless steel bayonet lock.
Window: tempered glass.
Dial: aluminium white with black markings.
Pointer: not adjustable, aluminium, black.
Zero-Adjustement: external zero-adjustment screw.

OPTIONS

DESCRIPTION	DS 4" (100mm)	DS 5" (125mm)	DS 6" (150mm)
2G3 - ATEX version II 2GD c	*See the ATEX temperature gauges data-.sheet for technical details*		
2D3 - ATEX version II 2GD ck			
3D3 - ATEX version II 3GD c			
C40 - Case and ring AISI 316 st.st.	◆	◆	◆
F02 - Special overtemperature	◆	◆	◆
R10 - Glycerine filling, max +320 °F (+160 °C)	◆	◆	◆
R11 - Silicone filling, max +482 °F (+250 °C)	◆	◆	◆
T01 - Tropicalization	◆	◆	◆
T32 - Safety double stratified glass	◆	◆	◆

ISO 9001 : 2008
Cert. nr. 0433/6

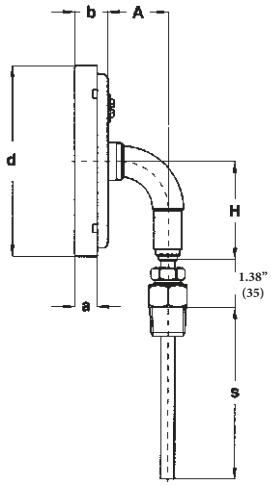

1 - LOWER CONNECTION

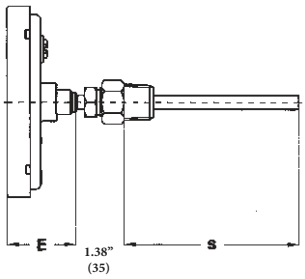

4 - BACK CONNECTION

dimensions : *inches* (mm)

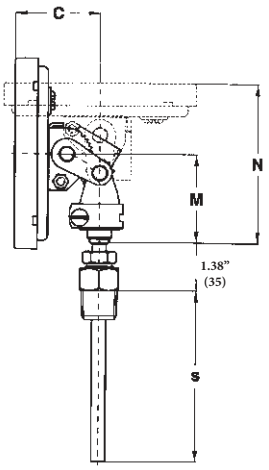

9 - EVERY-ANGLE CONNECTION

DS	A	a	b	C	d	E	H	M	N
E 4" (100)	1.36" (34,5)	0.51" (13)	0.75" (19)	1.93" (49)	4.35" (110,6)	1.54" (39)	2.24" (57)	2.03" (51,5)	3.64" (92,5)
F 5" (125)	1.36" (34,5)	0.57" (14,5)	0.77" (19,5)	1.95" (49,5)	5.12" (130)	1.56" (39,5)	2.56" (65)	2.03" (51,5)	3.66" (93)
G 6" (150)	1.36" (34,5)	0.59" (15)	0.79" (20)	1.97" (50)	6.34" (161)	1.57" (40)	3.23" (82)	2.03" (51,5)	3.68" (93,5)

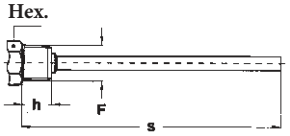

3 - Fixed male

F	Hex.	h
41M - G 1/2 A	0.87" (22) *	0.67" (17)
43M - 1/2-14 NPT	0.87" (22) *	0.55" (14)

* ø 24 for every-angle mounting

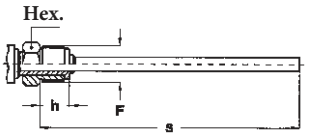

5 - Male swivel nut

F	Hex.	h
41M - G 1/2 A	0.87" (22)	0.55" (14)
51M - G 3/4 A	0.87" (22)	0.55" (14)

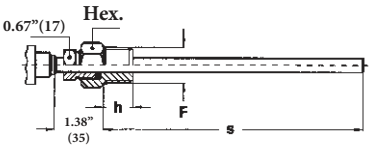

9 - Sliding male and swivel nut

F	Hex.	h
41M - G 1/2 A	0.87" (22)	0.55" (14)
43M - 1/2-14 NPT	0.87" (22)	0.67" (17)
51M - G 3/4 A	1.06" (27)	0.63" (16)
53M - 3/4-14 NPT	1.06" (27)	0.67" (17)

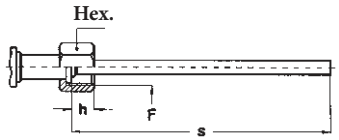

8 - Female swivel nut

F	Hex.	h
41F - G 1/2 A	0.94" (24)	0.63" (16)
51F - G 3/4 A	1.18" (30)	0.63" (16)

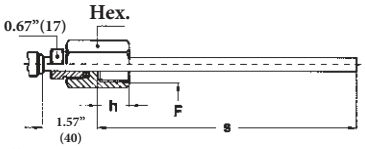

7 - Sliding female and swivel nut

F	Hex.	h
43F - 1/2-14 NPT	0.94" (24)	0.71" (18)
53F - 3/4-14 NPT	1.26" (32)	0.71" (18)

"HOW TO ORDER" SEQUENCE

Section / Model /Mounting / Connection type / Diameter / Range / Process connection / Bulb type and length / Options

6	TB8	1	3	E	41M	6	2G3...T32
		4	5	F	43M	7	
		9	7	G	51M	8	
			8		53M	9	
			9		43F		
					53F		

Copyright © Nuova Fima srl. All rights reserved. Any part of this publication should not be reproduced without a written Nuova Fima's srl approval

NUOVA FIMA USA Inc.
www.nuovafima.com - e-mail: infousa@nuovafima.com
4123 Hollister, Suite G - TX 77080 Houston
TEL. +1 713.690.9800 - FAX +1 713.690.9803

NUOVA FIMA srl
www.nuovafima.com - e-mail: info@nuovafima.com
P.O. BOX 58 - VIA C. BATTISTI 59 - 28045 INVORIO (NO) ITALY
TEL. +39 0322 253200 - FAX +39 0322 253232

RC6 - 08/16

IN ORDER TO IMPROVE THEIR PRODUCTION, MESSRS. NUOVA FIMA RESERVE THE RIGHT TO THEMSELVES TO MAKE ALL THE MODIFICATIONS THAT THEY DEEM INDISPENSABLE AT ANY TIME. UPDATED DATA-SHEETS ARE AVAILABLE ON SITE: **www.nuovafima.com**

TB9

bi-metal thermometers
DS 3", 5"
(80-125 mm)

PED 2014/68/EU

These instruments are designed for use in chemical, petrolchemical processing industries. They are built to resist the most severe operating conditions created by the environment and the process medium. A TIG welded case/bulb strengthens the whole construction. The hermetic seal minimize the risk of icing or fogging inside the case.

6.TB9 - Standard Model

Designation: ASME B40.3.
Accuracy class: 1% full-span (grade A).
Ranges: -80...+1000 °F/°C.
Overtemperature limit: 10% of full scale range; max 930 °F.
Ambient temperature: -20...+150 °F (-30...+65 °C).
Max working pressure: 200 psi - 15 bar (without thermowell).
Protection degree: IP 65 as per EN 60529/IEC 529.
Process connection: AISI 303 stainless steel.
Stem: ø 1/4" (6,35 mm), AISI 304 st. st.
Sensing element: coiled bi-metal.
Case: stainless steel, hermetically sealed as per ASME B40.3.
Ring: stainless steel, crimped.
Window: heavy duty tempered glass.
Dial: white aluminium, black and red marking.
Pointer: black aluminium.
Zero-adjustment: external, at back of case.

Ranges (°F/°C)
-80...+120
-20...+120
+30...+130
0...+200
0...+250
0...+300
+50...+300
+50...+400
+50...+550
+200...+700 (1)
+100...+800 (1)
+200...+1000 (1)

(1) minimum stem length: 6" inches (150 mm)

STEM LENGTH

cod.	7C	7D	7E	7F	7G	7H	7I
inch.	2" 1/2	4"	6"	9"	12"	15"	18"
(mm)	(63,5)	(101,6)	(152,4)	(228,6)	(304,8)	(381)	(457,2)

RG - 04/14

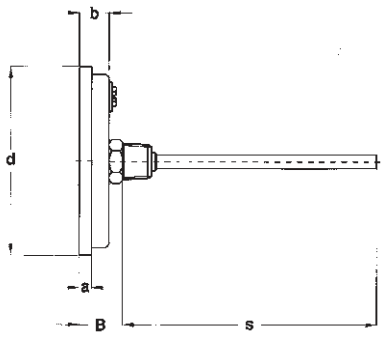

DS *3.5"-4.5"* (80-125 mm)

4 - Back connection

DS	a	b	d	B
D 3" (80)	0.32" (8,2)	0.67" (17)	3.13" (79,5)	0.98" (25)
F 5"(125)	0.26" (6,5)	0.65" (16,5)	5.09" (129,2)	0.96" (24,5)

dimensions : inches (mm)

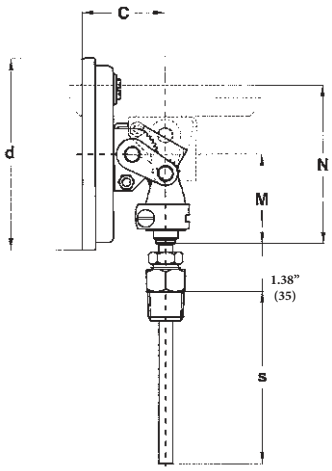

DS 4.5" (125 mm)

9 - Every-angle connection

DS	d	C	M	N
F 5"(125)	5.09" (129,2)	1.83" (46,5)	2.03" (51,5)	3.54" (90)

dimensions : inches (mm)

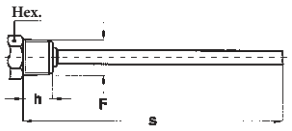

3 - Fixed male

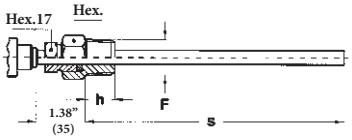

9 - Sliding male and swivel nut

DS	F	Hex.	h
D 3" (80)	23M 1/4-18 NPT	0.87" (22)	0.67" (17)
F 5"(125)	43M 1/2-14 NPT	0.87" (22)	0.67" (17)

dimensions : inches (mm)

OPTIONS

DESCRIPTION		
P00-	Glycerine fillable	(1)
P01 -	Silicone fillable	(1)
R10 -	Glycerine filling, max +320 °F (+160 °C)	(1)
R11 -	Silicone filling, max +482 °F (+250 °C)	(1)

(1) Protection degree: IP 67 as per EN 60529/IEC 529.

"HOW TO ORDER" SEQUENCE

Section / Model /Mounting / Connection type / Diameter / Range / Process connection / Bulb type and length / Options

6	TB9	4	3	D	43M	7C...7I	P00...R11
		9	9	F	23M		

Copyright © Nuova Fima srl. All rights reserved. Any part of this publication should not be reproduced without a written Nuova Fima's srl approval

NUOVA FIMA USA Inc.
www.nuovafima.com - e-mail: infousa@nuovafima.com
4123 Hollister, Suite G - TX 77080 Houston
TEL. +1 713.690.9800 - FAX +1 713.690.9803

NUOVA FIMA srl
www.nuovafima.com - e-mail: info@nuovafima.com
P.O. BOX 58 - VIA C. BATTISTI 59 - 28045 INVORIO (NO) ITALY
TEL. +39 0322 253200 - FAX +39 0322 253232

IN ORDER TO IMPROVE THEIR PRODUCTION, MESSRS. NUOVA FIMA RESERVE THE RIGHT TO THEMSELVES TO MAKE ALL THE MODIFICATIONS THAT THEY DEEM INDISPENSABLE AT ANY TIME. UPDATED DATA-SHEETS ARE AVAILABLE ON SITE: www.nuovafima.com

TG8

inert gas filled thermometers, local mounting
all stainless steel construction
DS 4", 6" (100-150 mm)

ATEX 2014/34/UE

These instruments are designed for use in chemical and petrochemical processing industries, and in conventional power plants. They are built to resist the most severe operating conditions created by the ambient environment and the process medium. An TIG welded case/bulb and capillary strengthens the whole construction. A leak tight fit is ensured if the instrument is filled with a dampening fluid to prevent damage due to vibration.

6.TG8 - Standard Model

Designation: EN 13190.
Indication ranges: *-320...+1200 °F* (-200...+600 °C).
Measuring ranges: *-280...+1100 °F* (-170...+500 °C).
Accuracy class: 1 as per EN 13190, measuring range.
Overtemperature limit: 25% of full scale range for temperature ≤ *750 °F* (400 °C); max *1100 °F* (600 °C).
Ambient temperature: *-22...+149 °F* (-40...+65 °C).
Max working pressure: *360 psi* - 25 bar (without thermowell).
Protection degree: IP 55 as per IEC 529.
Process connection: AISI 316 st.st.
AISI 316 st.st. bulb: with rigid extension *ø 0.31"* (8 mm): **S22** - *ø 0.31"* (8 mm) = *5.63"...393,7"* (143...10000 mm);
S21 - *ø 0.38"* (9,6 mm) = *4.41"...393,7"* (112...10000 mm);
S20 - *ø 0.45"* (11,5 mm) = *3.35"...393,7"* (85...10000 mm);
with flexible extension *ø 0.10"* (2,5 mm):
S12 - *ø 0.31"* (8 mm) = *5.63"...393,7"* (143...10000 mm);
S11 - *ø 0.38"* (9,6 mm) = *4.41"...393,7"* (112...10000 mm);
S10 - *ø 0.45"* (11,5 mm) = *3.35"...393,7"* (85...10000 mm);
Measuring element: inert gas filled expansion system.
Case: stainless steel.
Ring: stainless steel bayonet lock.
Window: tempered glass.
Movement: stainless steel.
Internal compensation device: by a bimetallic linkage.
Dial: aluminium, white with black markings.
Pointer: adjustable, aluminium, black.

OPTIONS

2G3 -	ATEX version II 2G c	(1) (2)		Electric contacts	(3)
2D3 -	ATEX version II 2GD c	(1) (2)	**R10** -	Glycerine filling, max *+320 °F* (+160 °C)	(2)
C40 -	Case and ring AISI 316 st.st.		**R11** -	Silicone filling, max *+482 °F* (+250 °C)	(2)
E65 -	Protection degree IP65	(2)	**T01** -	Tropicalization	
L22 -	Maximum pointer IP 65 on plexiglas window	(2)	**T32** -	Safety glass window	(2)

(1) See the ATEX temperature gauges data-sheet for technical details.
(2) Not available with electric contacts
(3) Codes, description and wiring on data sheet MN14.

RG8 - 08/16

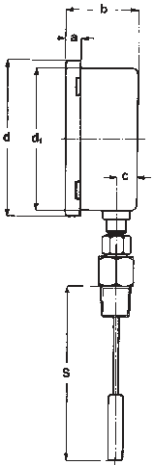

1 - Bottom mounting

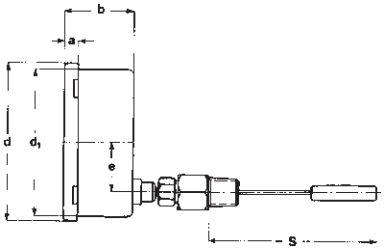

4 - Back mounting

DS	a	b	c	d	d_1
E 4" (100)	0.57" (14,5)	1.99" (50,5)	0.61" (15,5)	4.41" (112)	3.98" (101)
G 6" (150)	0.65" (16,5)	2.11" (53,5)	0.61" (15,5)	6.54" (166)	5.91" (150)

dimensions : *inches* (mm)

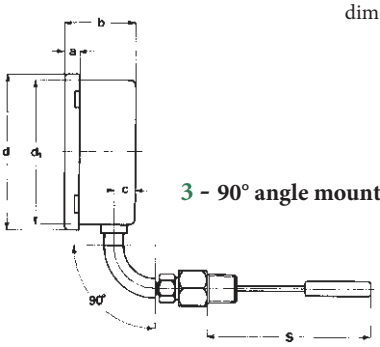

3 - 90° angle mounting

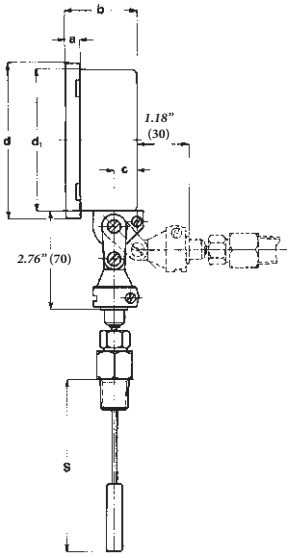

9 - Every angle mounting

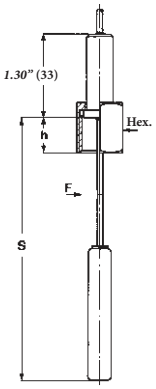

8 - Female swivel nut.

F	Hex.	h
41F G 1/2 A	0.94" (24)	0.63" (16)
51F G 3/4 A	1.18" (30)	0.63" (16)

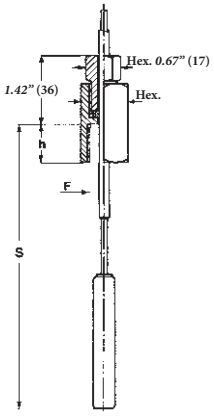

7 - Sliding female swivel nut.

F	Hex.	h
43F 1/2-14 NPT	0.94" (24)	0.71" (18)
53F 3/4-14 NPT	1.18" (30)	0.71" (18)

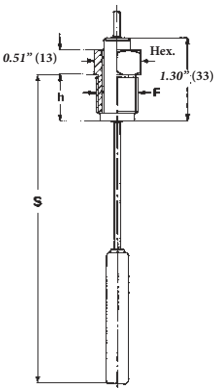

5 - Male swivel nut.

F	Hex.	h
41M G 1/2 A	0.87" (22)	0.55" (14)
51M G 3/4 A	1.06" (27)	0.55" (14)

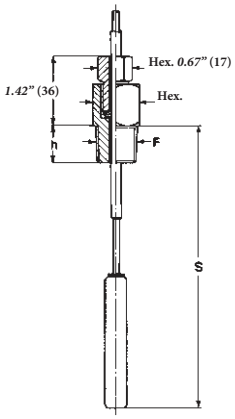

9 - Sliding male swivel nut.

F	Hex.	h
41M G 1/2 A	0.87" (22)	0.55" (14)
43M 1/2-14 NPT	0.87" (22)	0.67" (17)
51M G 3/4 A	1.06" (27)	0.63" (16)
53M 3/4-14 NPT	1.06" (27)	0.67" (17)

dimensions : *inches* (mm)

"HOW TO ORDER" SEQUENCE

Section	Model	Mounting	Connection type	Diameter	Range	Process connection	Bulb	Options
6	TG8	1, 3	5, 7	E		41M, 43M	S20...22	2G3...T32
		4, 9	8, 9	G		51M, 53M	S10...12	

Copyright © Nuova Fima S.p.A. All rights reserved. Any part of this publication should not be reproduced without a written Nuova Fima's S.p.A. approval

IN ORDER TO IMPROVE THEIR PRODUCTION, MESSRS. NUOVA FIMA RESERVE THE RIGHT TO THEMSELVES TO MAKE ALL THE MODIFICATIONS THAT THEY DEEM INDISPENSABLE AT ANY TIME. UPDATED DATA-SHEETS ARE AVAILABLE ON SITE: www.nuovafima.com

NUOVA FIMA USA Inc.
www.nuovafima.com - e-mail: infousa@nuovafima.com
4123 Hollister, Suite G - TX 77080 Houston
TEL. +1 713.690.9800 - FAX +1 713.690.9803

NUOVA FIMA srl
www.nuovafima.com - e-mail: info@nuovafima.com
P.O. BOX 58 - VIA C. BATTISTI 59 - 28045 INVORIO (NO) ITALY
TEL. +39 0322 253200 - FAX +39 0322 253232

TG8

inert gas filled thermometers for remote readings
all stainless steel construction
DS 4", 6" (100-150 mm)

ATEX 2014/34/UE

These instruments are designed for use in chemical and petrochemical processing industries, and in conventional power plants. They are built to resist the most severe operating conditions created by the ambient environment and the process medium. An TIG welded case/bulb and capillary strengthens the whole construction. A leak tight fit is ensured if the instrument is filled with a dampening fluid to prevent damage due to vibration.

6.TG8 - Standard Model

Designation: EN 13190.
Indication ranges: *-320...+1200 °F* (-200...+600 °C).
Measuring ranges: *-280...+1100 °F* (-170...+500 °C).
Accuracy class: 1 as per EN 13190, measuring range.
Overtemperature limit: 25% of full scale range for temperature ≤ *750 °F* (400 °C); max *1100 °F* (600 °C).
Ambient temperature: *+32...+149 °F* (0...+65 °C).
Max working pressure: *360 psi* - 25 bar (without thermowell).
Protection degree: IP 55 as per EN 60529/IEC 529.
Process connection: AISI 316 st.st.
Stainless steel capillary: **1** - uncovered, ø *0.10"* (2,5 mm);
9 - covered with stainless steel flexible armour, ø *0.24"* (6 mm);
6 - covered with st.st. PVC coated flexible armour, ø *0.24"* (6 mm).
Measuring element: inert gas filled expansion system.
Case: stainless steel.
Ring: stainless steel bayonet lock.
Window: tempered glass.
Movement: stainless steel.
Internal compensation device: by a bimetallic linkage.
Dial: aluminium, white with black markings.
Pointer: adjustable, aluminium, black.

BULB

ø bulb	Rigid extension code, ø *0.31"* (8 mm)	Flexible extension code, ø *0.1"* (2,5 mm)	sensible part length "b" (mm)		bulb length "S" (mm)
			capillary ≤ 15 mt	capillary 16...30 mt	
0.31" (8 mm)	**S22**	**S12**	118	167	("b"+25)...1000
0.38" (9,6 mm)	**S21**	**S11**	87	127	("b"+25)...1000
0.45" (11,5 mm)	**S20**	**S10**	60	87	("b"+25)...1000

OPTIONS

2G3 - ATEX version II 2G c	(1) (2)	Electric contacts	(3)
2D3 - ATEX version II 2GD c	(1) (2)	**R10** - Glycerine filling	(2)
C40 - Case and ring AISI 316 st.st.		**R11** - Silicone filling	(2)
E65 - Protection degree IP65	(2)	**T01** - Tropicalization	
L22 - Maximum pointer IP 65 on plexiglas window	(2)	**T32** - Safety glass window	(2)

(1) See the ATEX temperature gauges data-sheet for technical details.
(2) Not available with electric contacts
(3) Codes, description and wiring on data sheet MN14.

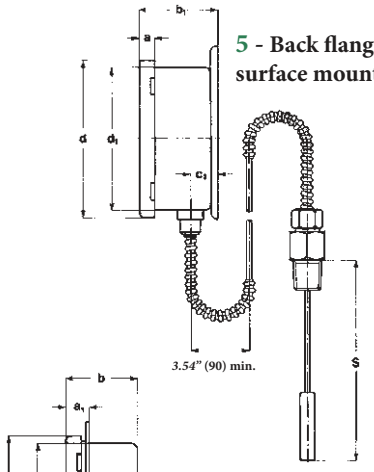

5 - Back flange for surface mounting.

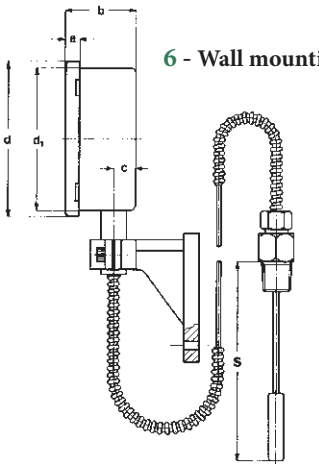

6 - Wall mounting

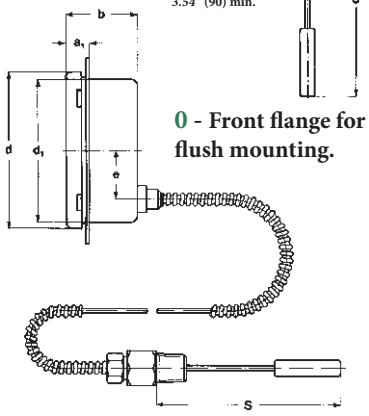

0 - Front flange for flush mounting.

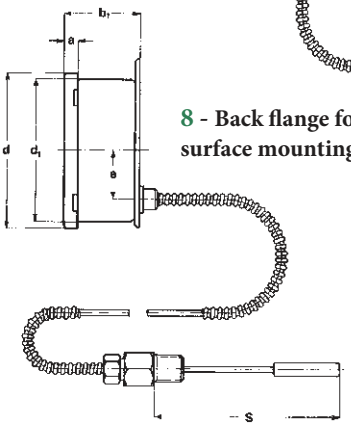

8 - Back flange for surface mounting.

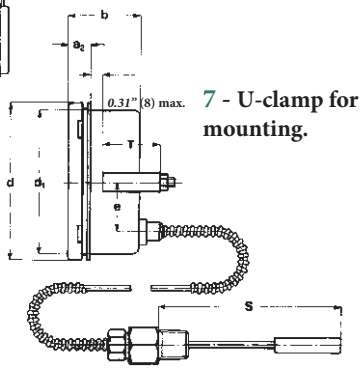

7 - U-clamp for flush mounting.

DS	A	B	a	a_1	a_2	b	b_1	c	c_1	d	d_1	D	E	E_1	e	h	h_1	T	V	Z
E 4" (100)	*2.72"* (69)	*2.36"* (60)	*0.57"* (14,5)	*0.83"* (21)	*0.79"* (20)	*1.99"* (50,5)	*2.15"* (54,5)	*0.61"* (15,5)	*0.77"* (19,5)	*4.41"* (112)	*3.98"* (101)	*5.12"* (130)	*4.57"* (116)	*4.65"* (118)	*1.36"* (34,5)	*2.05"* (52)		*1.63"* (41,5)	*2.76"* (70)	*4.41"* (112
G 6" (150)	*3.78"* (96)	*2.36"* (60)	*0.65"* (16,5)	*0.83"* (21)	*0.79"* (20)	*2.11"* (53,5)	*2.26"* (57,5)	*0.61"* (15,5)	*0.77"* (19,5)	*6.54"* (166)	*5.91"* (150)	*7.48"* (190)	*6.89"* (175)		*1.36"* (34,5)	*3.35"* (85)	*3.35"* (85)	*1.77"* (45)	*4.17"* (106)	*6.10"* (155)

dimensions : *inches* (mm)

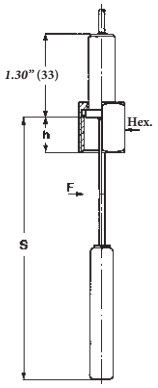

8 - Female swivel nut.

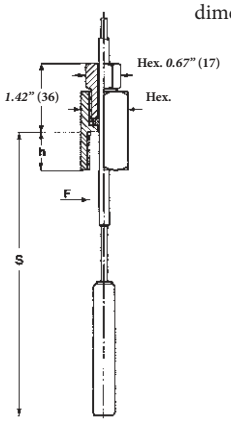

7 - Sliding female swivel nut.

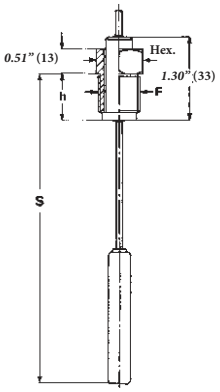

5 - Male swivel nut.

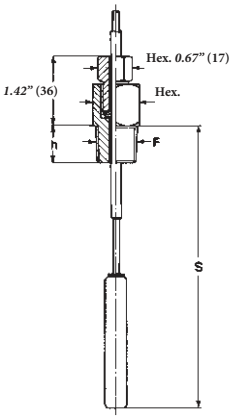

9 - Sliding male swivel nut.

F	Hex.	h
41M G 1/2 A	*0.94"* (24)	*0.63"* (16)
51M G 3/4 A	*1.18"* (30)	*0.63"* (16)

F	Hex.	h
43M *1/2-14 NPT*	*0.94"* (24)	*0.71"* (18)
53M *3/4-14 NPT*	*1.18"* (30)	*0.71"* (18)

dimensions : *inches* (mm)

F	Hex.	h
41M G 1/2 A	*0.87"* (22)	*0.55"* (14)
51M G 3/4 A	*1.06"* (27)	*0.55"* (14)

F	Hex.	h
41M - G 1/2 A	*0.87"* (22)	*0.55"* (14)
43M - *1/2-14 NPT*	*0.87"* (22)	*0.67"* (17)
51M - G 3/4 A	*1.06"* (27)	*0.63"* (16)
53M - *3/4-14 NPT*	*1.06"* (27)	*0.67"* (17)

"HOW TO ORDER" SEQUENCE

Section / Model /Mounting / Connection type / Diameter / Range / Process connection / Bulb / Capillary / Options

6	**TG8**	**0, 5, 6**	**5, 7**	**E**	**41M, 43M**	**S20...22**	**1**	**2G3...T32**
		7, 8	**8, 9**	**G**	**51M, 53M**	**S10...12**	**6**	

Copyright © Nuova Fima srl. All rights reserved. Any part of this publication should not be reproduced without a written Nuova Fima's srl approval

NUOVA FIMA USA Inc.
www.nuovafima.com - e-mail: infousa@nuovafima.com
4123 Hollister, Suite G - TX 77080 Houston
TEL. +1 713.690.9800 - FAX +1 713.690.9803

NUOVA FIMA srl
www.nuovafima.com - e-mail: info@nuovafima.com
P.O. BOX 58 - VIA C. BATTISTI 59 - 28045 INVORIO (NO) ITALY
TEL. +39 0322 253200 - FAX +39 0322 253232

RC8 - 08/16

IN ORDER TO IMPROVE THEIR PRODUCTION, MESSRS. NUOVA FIMA RESERVE THE RIGHT TO THEMSELVES TO MAKE ALL THE MODIFICATIONS THAT THEY DEEM INDISPENSABLE AT ANY TIME. UPDATED DATA-SHEETS ARE AVAILABLE ON SITE: www.nuovafima.com

inert gas filled thermometers, anti-vibration all stainless steel construction DS 4" (100 mm)

These instruments are designed to measure the waste gas of diesel engines. They are built to resist to the most severe operating conditions created by high temperature and by the diesel engines vibrations.

6.TA8 - Standard Model

Measuring range: 0...650 °C/°F (other ranges on request).
Accuracy class: 1 as per EN 13190, measuring range.
Overtemperature limit: not suitable.
Ambient temperature: -13...+149 °F (-25...+65 °C).
Max working pressure: 360 psi - 25 bar (without thermowell).
Protection degree: IP 67 as per EN 60529/IEC 529.
Process connection: AISI 303 st.st.
Bulb: AISI 316 st.st.
S24 - ø 0.37" (9,5 mm), with rigid extension ø 0.5" (12,7 mm).
Immersion length: 5.51"...17.72" (140...450 mm);
Measuring element: inert gas filled expansion system.
Case: AISI304 st.st.
Ring: AISI304 st.st, bayonet lock.
Window: tempered glass.
Movement: stainless steel.
Dial: aluminium, white with black abd red markings.
Pointer: adjustable, aluminium, black.
Filling liquid: high viscosity silicone oil.
Internal compensation device: by a bimetallic linkage.
Gasket: siliconic gum.

RC2 - 03/16

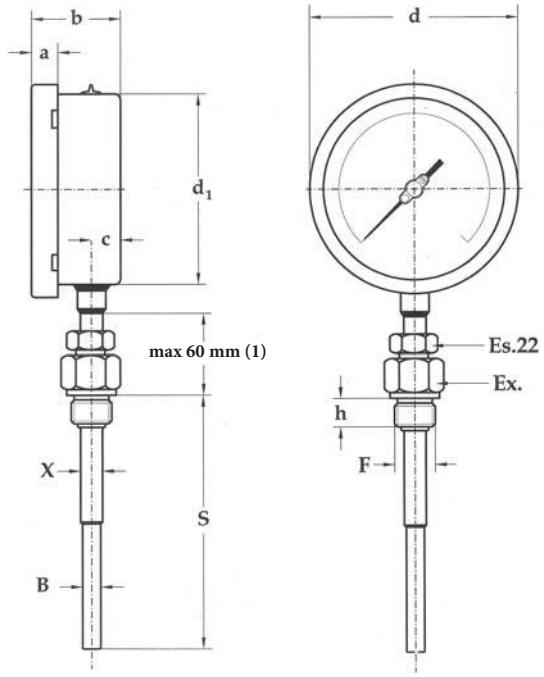

F	Ex.	h
41M	*1.06"*	*0.55"*
G 1/2 A	(27)	(14)
43M	*0.94"*	*0.67"*
1/2-14 NPT	(24)	(17)

1 - LOWER CONNECTION

a	b	c	d	d_1	ø X	ø B	S
0.51"	1.89"	0.61"	4.35"	3.98"	0.50"	0.37"	5.51...17.72"
(13)	(48)	(15,5)	(110,6)	(101)	(12,7)	(9,5)	(140...450)

(1) For a longer instrument life do not settle the sliding connection at a higher level than the one indicated.

dimensions : inches (mm)

"HOW TO ORDER" SEQUENCE

Section / Model /Mounting / Connection type / Diameter / Range / Process connection / Bulb type and length / Options

Section	Model	Mounting	Connection type	Diameter	Range	Process connection	Bulb type and length	Options
6	TA8	1	9	E		41M	S24	
						43M		

IN ORDER TO IMPROVE THEIR PRODUCTION, MESSRS. NUOVA FIMA RESERVE THE RIGHT TO THEMSELVES TO MAKE ALL THE MODIFICATIONS THAT THEY DEEM INDISPENSABLE AT ANY TIME. UPDATED DATA-SHEETS ARE AVAILABLE ON SITE: **www.nuovafima.com**

Copyright © Nuova Fima srl. All rights reserved. Any part of this publication should not be reproduced without a written Nuova Fima's srl approval

NUOVA FIMA USA Inc.
www.nuovafima.com - e-mail: infousa@nuovafima.com
4123 Hollister, Suite G - TX 77080 Houston
TEL. +1 713.690.9800 - FAX +1 713.690.9803

NUOVA FIMA srl
www.nuovafima.com - e-mail: info@nuovafima.com
P.O. BOX 58 - VIA C. BATTISTI 59 - 28045 INVORIO (NO) ITALY
TEL. +39 0322 253200 - FAX +39 0322 253232

TV606

industrial glass tube thermometer
brass series

Instruments designed for use on: conventional power station, refrigeration plant, heating, ventilation and air-condittioning plant.

6.V6 - Standard Model

Accuracy: ±1,0% of full scale value.
Working pressure: *350 psi max* (25 bar), without thermowell.
Overtemperature: not suitable.
Sensing element: colored liquid, mercury.
Graduation: engraved on internal wall of case.
Tube: glass, prismatic on mercury types.
Bulb: *ø 0.43"* (11 mm).
Case: aluminium, anodized brass.
Process connection and bulb protection:
brass for Te ≤ *752 °F* (400 °C).
Standard bulb length: 1.57, 1.89, 2.48, 3.15, 3.93, 6.30, 7.87, 11.81"
(40, 48, 63, 80, 100, 160, 200, 300 mm.

RANGES	Scale graduation (°C)		
°C	ND 4" (110mm)	ND 6" (150mm)	ND 8" (200mm)
-60...+40		2	
-50...+50			1
-40...+40	1	1	
-30...+50		1	1
-10...+50		1	1
0...+50	1		
0...+100	2	2	1
0...+120	2	2	1
0...+160	2	2	2
0...+200	5	5	2
0...+300		5	5
0...+400		5	5

NOTE
In case of breakage it is sufficient to change the tube, with engraved scale. This operation is possible thanks to the perfect interchangeability of tubes wich permits a perfect alignment between engraved scale on tube and graduations on casing.

RB4 -03/13

MOUNTING

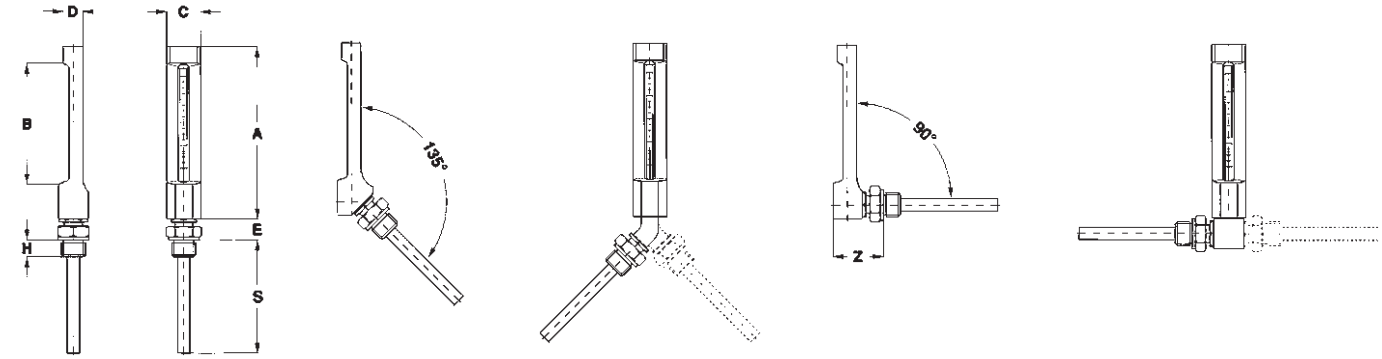

Cod. 1 | Cod. 2 (ND 6"- 150mm not available) | Cod. F | Cod. G | Cod. 4 | Cod. D | Cod. E

ND	F	A	B	C	D	E	Z	H	S	Weight *lbs.* (kg)
E 4" (110 mm)	**31M** - G 3/8 A **41M** - G 1/2 A **51M** - G 3/4 A **43M** - 1/2-14 NPT **53M** - 3/4-14 NPT	*4.33* (110)	*2.79* (70)	*1.38* (35)	*0.79* (20)	*0.79* (20)	*1.77* (45)	*0.59* (15)	*1.57...11.81* (40...300)	*1.32...2.42* (0,6...1,1)
G 6" (150 mm)		*5.91* (150)	*3.94* (100)	*1.38* (35)	*0.79* (20)	*0.79* (20)	*1.77* (45)	*0.59* (15)	*1.57...11.81* (40...300)	*1.54...2.64* (0,7...1,2)
H 8" (200 mm)		*7.87* (200)	*5.91* (150)	*1.38* (35)	*0.79* (20)	*0.79* (20)	*1.77* (45)	*0.59* (15)	*1.57...11.81* (40...300)	*1.76...2.86* (0,8...1,3)

dimensions : *inches* (mm)

FILLING LIQUIDS

°C	Colored liquid A	Mercury B
-60...+40	v	
-50...+50	v	
-40...+40	v	
-30...+50	v	v
-10...+50	v	v
0...+50	v	v
0...+100	v	v
0...+120	v	v
0...+160	v	v
0...+200	v	v
0...+300		v
0...+400		v

"HOW TO ORDER" SEQUENCE

Section / Model /Mounting / Connection type / Diameter / Range / Process connection / Bulb type and length

6	V6	1	3	E	31M	A
		2		G	41M	B
		F		H	51M	
		G			43M	
		4			53M	
		D				
		E				

Copyright © Nuova Fima S.p.A. All rights reserved. Any part of this publication should not be reproduced without a written Nuova Fima's S.p.A. approval

IN ORDER TO IMPROVE THEIR PRODUCTION, MESSRS. NUOVA FIMA RESERVE THE RIGHT TO THEMSELVES TO MAKE ALL THE MODIFICATIONS THAT THEY DEEM INDISPENSABLE AT ANY TIME. UPDATED DATA-SHEETS ARE AVAILABLE ON SITE: www.nuovafima.com

NUOVA FIMA USA Inc.
www.nuovafima.com - e-mail: infousa@nuovafima.com
4123 Hollister, Suite G - TX 77080 Houston
TEL. +1 713.690.9800 - FAX +1 713.690.9803

NUOVA FIMA srl
www.nuovafima.com - e-mail: info@nuovafima.com
P.O. BOX 58 - VIA C. BATTISTI 59 - 28045 INVORIO (NO) ITALY
TEL. +39 0322 253200 - FAX +39 0322 253232

TV8

industrial glass tube thermometer watertight enclosure

These instruments are designed for the chemical and petrochemical industry, air conditioning and conventional power plants.

6.V8 - Standard Model

Accuracy: ±1,0% of full scale value.
Working pressure: 600 psi max (40 bar), without thermowell.
Overtemperature: not suitable.
Protection degree: IP 55 as per EN 60529/IEC 529.
Tube: Jena 16 III glass, with blue reflex on temperatures.
Sensing element: colored liquid, mercury.
Process connection and bulb protection: carbon steel.
Standard bulb length: 3.94, 7.87, 11.81, 15.75, 19.69" (100, 200, 300, 400, 500 mm).
Dial: aluminium, white with black markings.
Bulb: ø 0.43" (11 mm).
Case: aluminium-alloy, black painted.
Cover: polishec stainless steel.
Window: glass, 0.08" (2 mm) thick.
Gasket: neoprene.

RANGES	Scale graduation (°C)	
°C	ND 7" (180 mm)	ND 10" (250 mm)
-50...+30	1	1
-50...+50	1	1
-40...+40	1	1
-30...+50	1	1
-10...+50	1	1
0...+80	1	1
0...+100	1	1
0...+120	2	1
0...+160	2	1
0...+200	2	2
0...+240		2
0...+300	5	5
0...+400	5	5

RC4 -12/16

MOUNTING

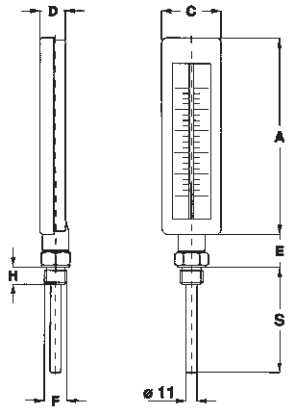

Cod. 1

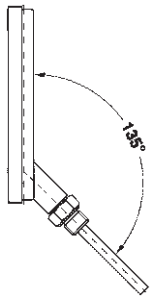

Cod. 2

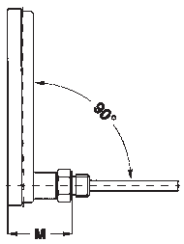

Cod. 4

ND	F	A	C	D	E	M	H	S	Weight *lbs.* (kg)
H	41M - G 1/2 A	7.09	2.17	0.98	1.24	2.42	0.63	3.94...19.69	1.32...2.42
7” (180 mm)	51M - G 3/4 A	(180)	(55)	(25)	(31,5)	(61,5)	(16)	(100...500)	(0,6...1,1)
I	43M - 1/2-14 NPT	9.84	2.17	0.98	1.24	2.42	0.63	3.94...19.69	1.54...2.64
10” (250 mm)	53M - 3/4-14 NPT	(250)	(55)	(25)	(31,5)	(61,5)	(16)	(100...500)	(0,7...1,2)

FILLING LIQUIDS

°C	Colored liquid A	Mercury B
-50...+30	v	
-50...+50	v	
-40...+40	v	
-30...+50	v	v
-10...+50	v	v
0...+80	v	v
0...+100	v	v
0...+120	v	v
0...+160	v	v
0...+200	v	v
0...+240		v
0...+300		v
0...+400		v

“HOW TO ORDER” SEQUENCE

Section / Model /Mounting / Connection type / Diameter / Range / Process connection / Bulb type and length

6	V8	1	3	H	41M	A
		2		I	51M	B
		4			43M	
					53M	

IN ORDER TO IMPROVE THEIR PRODUCTION, MESSRS. NUOVA FIMA RESERVE THE RIGHT TO THEMSELVES TO MAKE ALL THE MODIFICATIONS THAT THEY DEEM INDISPENSABLE AT ANY TIME. UPDATED DATA-SHEETS ARE AVAILABLE ON SITE: www.nuovafima.com

NUOVA FIMA USA Inc.
www.nuovafima.com - e-mail: infousa@nuovafima.com
4123 Hollister, Suite G - TX 77080 Houston
TEL. +1 713.690.9800 - FAX +1 713.690.9803

NUOVA FIMA srl
www.nuovafima.com - e-mail: info@nuovafima.com
P.O. BOX 58 - VIA C. BATTISTI 59 - 28045 INVORIO (NO) ITALY
TEL. +39 0322 253200 - FAX +39 0322 253232

MN14

electric contacts for inert gas filled thermometers

PED 2014/68/EU

Are accessories with movable contacts in air, which open or close electric circuits depending of the position of the indicating pointer. They are used with inert gas filled thermometers of NUOVA FIMA production, in such way they become temperature switches: the optimal and sure solution to automatize any kind of equipment.

Contacts: sliding, magnetic snap action. Functional and constructive characteristics, wiring and electrci schemas are shown on the attached data-sheet: "ELECTRIC CONTACT".

Accuracy: when the indicating pointer is affected by the contact link add to the gauge accuracy the 50% of their accuracy (with the exclusion of the working area within the 5% if the contact is magnetic type).

Contact setting: over an arc of 270 °, trough the knob placed on front lens or trough removable key.

Electrical wiring: junction box PG9 as per DIN 43650 or cable 0,5 mt.

Ambient temperature: -25...+65 ∞C.

Protection: IP 44 as per IEC 529, (option IP 55).

Contact material: Silver-Nickel 80%-20% (optionsGold-Silver and Platinum-Iridium).

Window: Makrolon.

Overtemperature: non suitable.

DIMENSIONS (mm)

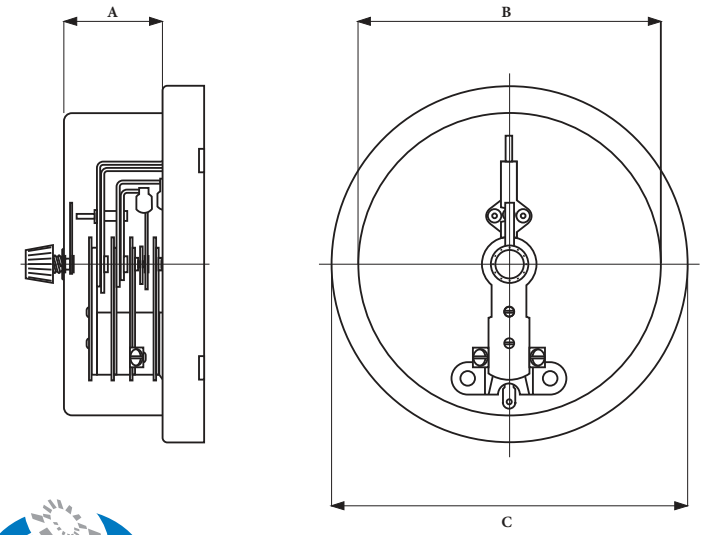

Single contact

DS	A	B	C
100	29	95	110,6
150	29	141	161

Double contacts

DS	A	B	C
100	36	95	110,6
150	36	141	161

ISO 9001 : 2008
Cert. nr. 0433/6

MODEL	TG8 DS 100-150		
Mounting	Lower, back, with back flange also		
Contact type	Sliding and magnetic snap-action contact		
Contact number		2	2 indipendent
Junction box	3 poles + GND	3 poles + GND	
ø exit cables: inches (mm)	0,23...0,35 (6...9)	0,23...0,35 (6...9)	
Cable exit ø cable: inches (mm)			4 poles + 1 0,27 (7)

MODEL	TG8 DS 100-150		
Mounting	Back, with front flange		
Contact type	Sliding and magnetic snap-action contact		
Contact number	1	2	2 indipendent
Junction box	3 poles + GND	3 poles + GND	
ø exit cables: inches (mm)	0,23...0,35 (6...9)	0,23...0,35 (6...9)	
Cable exit ø cable: inches (mm)			4 poles + 1 0,27 (7)

MODEL	TG8 DS 100-150		
Mounting	Back, with U-clamp		
Contact type	Sliding and magnetic snap-action contact		
Contact number	1	2	2 indipendent
Junction box	3 poles + GND	3 poles + GND	
ø exit cables: inches (mm)	0,23...0,35 (6...9)	0,23...0,35 (6...9)	
Cable exit ø cable: inches (mm)	2 poles + GND (1) 0,19 (4,8)	3 poles + GND (1) 0,23 (6)	4 poles + 1 0,27 (7)

IN ORDER TO IMPROVE THEIR PRODUCTION, MESSRS. NUOVA FIMA RESERVE THE RIGHT TO THEMSELVES TO MAKE ALL THE MODIFICATIONS THAT THEY DEEM INDISPENSABLE AT ANY TIME. UPDATED DATA-SHEETS ARE AVAILABLE ON SITE: www.nuovafima.com

Copyright © Nuova Fima srl. All rights reserved. Any part of this publication should not be reproduced without a written Nuova Fima's srl approval

NUOVA FIMA USA Inc.
www.nuovafima.com - e-mail: infousa@nuovafima.com
4123 Hollister, Suite G - TX 77080 Houston
TEL. +1 713.690.9800 - FAX +1 713.690.9803

NUOVA FIMA srl
www.nuovafima.com - e-mail: info@nuovafima.com
P.O. BOX 58 - VIA C. BATTISTI 59 - 28045 INVORIO (NO) ITALY
TEL. +39 0322 253200 - FAX +39 0322 253232

thermometers with electric contacts all stainless steel construction DS 4" (100 mm)

Compliance to requirements of BT 2014/35/EU

They are used to control the electrical operation of compressors, pumps, presses, hydraulic and pneumatics equipment, chemical and petrochemical plant. The contacts open or close the circuit depending on the position of the indicating pointer and they are adjustable over the whole range. The filling drastically reduces the effect of such factors as well as those caused by a corrosive atmosphere, giving longer life and better performances of the pressure gauge and their electric contacts. They are also available with inductive contacts intrinsecally safe.

6.TCE - Standard Model

Designation: EN 13190.
Indication ranges: *-320...+1200 °F* (-200...+600 °C).
Measuring ranges: *-280...+1100 °F* (-170...+500 °C).
Mechanical contact: sliding contact, magnetic snap-action, electronic, inductive.
Accuracy class: 1 as per EN 13190, measuring range.
Overtemperature: not suitable.
Ambient temperature: *-13...+149 °F* (-25...+65 °C).
Max working pressure: *360 psi* - 25 bar (without thermowell).
Protection degree: IP 55 as per EN 60529/IEC 529.
Process connection: AISI 316 st.st.
Bulb: AISI 316 st.st. ø *0.31-0.37-0.45"* (8-9,5-11,5 mm), with rigid extension ø *0.31"* (8 mm)
Immersion length of the bulb with rigid extension "S": **S22** - ø *0.31"* (8 mm) = *5.63"...36.37"* (143...1000 mm);
S21 - ø *0.38"* (9,6 mm) = *4.41"...36.37"* (112...1000 mm);
S20 - ø *0.45"* (11,5 mm) = *3.35"...36.37"* (85...1000 mm).
Measuring element: inert gas filled expansion system.
Case: stainless steel.
Ring: stainless steel bayonet lock.
Window: plexiglas.
Movement: stainless steel.
Internal compensation device: by a bimetallic linkage.
Dial: aluminium, white with black markings.
Pointer: adjustable, aluminium, black.

6.TCE...R13 - Filled Model

Indication ranges: *-40...+500 °F* (-40...+250 °C).
Measuring ranges: *-20...+425 °F* (-30...+220 °C).
Mechanical contact: magnetic snap-action, electronic, inductive.
Accuracy class: 2 as per EN 13190, measuring range.
Filling liquids: silicon oil.
Protection: IP 65 as per EN 60529/IEC 529.
Other features: as Standard Model.

(1) The addition of mechanical electric contacts affects the accuracy of instruments such that 1% becomes 1,5%, 1,6% becomes 2,4% etc. (add the 50% of accuracy; if the contact is of the magnetically assisted type, this value can't be added within the ±5% of setting point).

ISO 9001 : 2008
Cert. nr. 0433/6

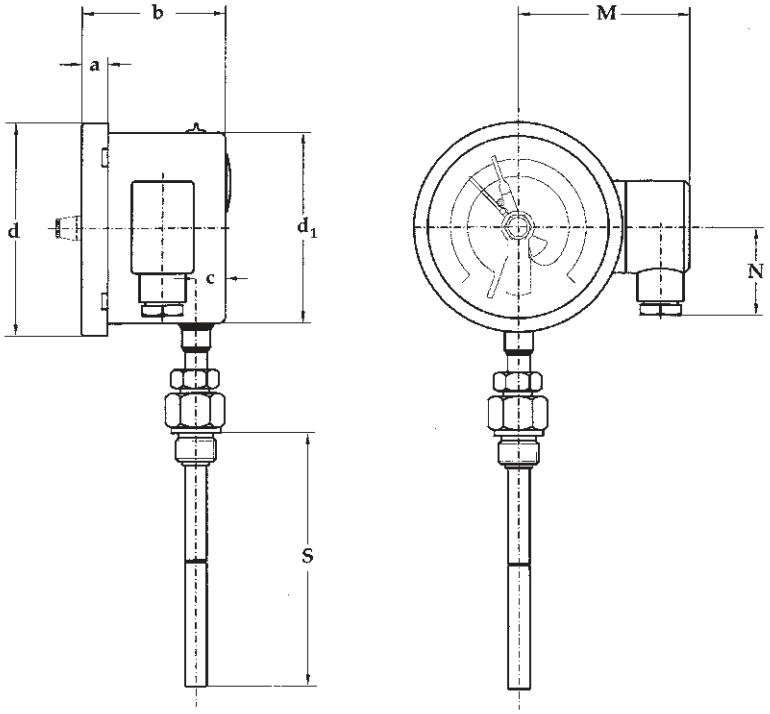

1 - Lower connection

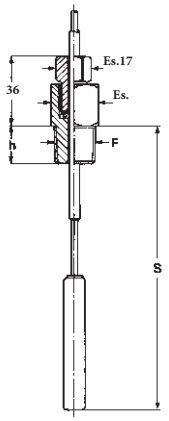

9 - Sliding male swivel nut

DS	a	b (1)	d	d_1	M	N
4" (100)	*0.51"* (13)	*2.81/2.85"* (71,5/82,5)	*4.41"* (112)	*3.98"* (101)	*3.54"* (90)	*1.81"* (46)

dimensions : *inches* (mm)

F	Es	h
41M G 1/2 A	*0.87"* (22)	*0.55"* (14)
43M 1/2-14 NPT	*0.87"* (22)	*0.67"* (17)
51M G 3/4 A	*1.06"* (27)	*0.63"* (16)
53M 3/4-14 NPT	*1.06"* (27)	*0.67"* (17)

CONTACT TYPE (1)

MODEL	Standard			Filled		
Contact type	Sliding contact, electronic			Magnetic snap-action contact, electronic		
Contact number	1	2	2 indipendent	1	2	2 indipendent
Junction box	3 poles + GND	3 poles + GND	6 poles + GND	6 poles + GND	6 poles + GND	6 poles + GND
ø exit cables: *inches* (mm)	*0,23...0,35* (6...9)	*0,23...0,35* (6...9)	*0,27...0,51* (7...13)	*0,27...0,51* (7...13)	*0,27...0,51* (7...13)	*0,27...0,51* (7...13)
Minimum range	*140°F* (60°C)	*140°F* (60°C)	*140°F* (60°C)	*140°F* (60°C)	*140°F* (60°C)	*140°F* (60°C)

(1) Functional characteristics, electric diagrams and contact types are available on data-sheets : "ELECTRIC CONTACTS", "ELECTRONIC CONTACTS"

OPTIONS

R13 - Filling liquid: silicon oil, for temperature range ≤ *+500 °F* (250 °C)
ATEX version, with intrinsic safety inductive contact (1)

(1) See ATEX data-sheet for technical details

"HOW TO ORDER" SEQUENCE

Section / Model /Mounting / Connection type / Diameter / Range / Process connection / Bulb / Options

6	TCE	1	9	E	41M, 43M 51M, 53M	S20...22	R13

Copyright © Nuova Fima srl. All rights reserved. Any part of this publication should not be reproduced without a written Nuova Fima's srl approval

NUOVA FIMA USA Inc.
www.nuovafima.com - e-mail: infousa@nuovafima.com
4123 Hollister, Suite G - TX 77080 Houston
TEL. +1 713.690.9800 - FAX +1 713.690.9803

NUOVA FIMA srl
www.nuovafima.com - e-mail: info@nuovafima.com
P.O. BOX 58 - VIA C. BATTISTI 59 - 28045 INVORIO (NO) ITALY
TEL. +39 0322 253200 - FAX +39 0322 253232

IN ORDER TO IMPROVE THEIR PRODUCTION, MESSRS. NUOVA FIMA RESERVE THE RIGHT TO THEMSELVES TO MAKE ALL THE MODIFICATIONS THAT THEY DEEM INDISPENSABLE AT ANY TIME. UPDATED DATA-SHEET ARE AVAILABLE ON SITE: www.nuovafima.com

bimetallic thermometers : ranges

standard version : DS 2.5", 3", 4", 5" (63-80-100-125 mm)

TB7

Primary °C	
Indication Ranges	Measuring Ranges
-20...+40	-10...+30
0...+60	+10...+50
0...+100	+10...+90
0...+120	+20...+100
0...+160	+20...+140
0...+200	+20...+180
0...+300	+30...+270
0...+400	+50...+350
0...+500	+50...+450

Primary °C (external)		Secondary °F (internal)	
Indication Ranges	Measuring Ranges	Indication Ranges	Measuring Ranges
-20...+40	-10...+30	-4...+104	+14...+86
0...+60	+10...+50	+30...+140	+50...+122
0...+100	+10...+90	+32...+212	+50...+194
0...+120	+20...+100	+32...+250	+68...+212
0...+160	+20...+140	+32...+320	+68...+284
0...+200	+20...+180	+35...+400	+68...+356
0...+300	+30...+270	+35...+570	+86...+518
0...+400	+50...+350	+40...+750	+122...+662
0...+500	+50...+450	0...+930	+122...+842

"all stainless steel" version : DS 4", 5", 6" (100-125-150 mm)

TB8

Primary °C	
Indication Ranges	Measuring Ranges
-50...+50	-40...+40
-30...+50	-20...+40
-20...+120	0...+100
-20...+80	-10...+70
-20...+40	-10...+30
0...+60	+10...+50
0...+80	+10...+70
0...+100	+10...+90
0...+120	+20...+100
0...+160	+20...+140
0...+200	+20...+180
0...+250	+30...+220
0...+300	+30...+270
0...+400	+50...+350
0...+500	+50...+450
0...+600	+100...+500
+50...+450	+100...+400
+100...+500	+150...+450

Primary °F	
Indication Ranges	Measuring Ranges
-80...+120	-60...+100
-20...+120	0...+100
0...+200	+20...+180
0...+250	+30...+220
+50...+400	+100...+350
+50...+550	+100...+500
+200...+700	+250...+650
+100...+800	+200...+700
+200...+1000	+300...+900

Primary °C (external)		Secondary °F (internal)	
Indication Ranges	Measuring Ranges	Indication Ranges	Measuring Ranges
-50...+50	-40...+40	-60...+122	-40...+104
-30...+50	-20...+40	-22...+122	-4...+104
-20...+120	0...+100	-4...+250	+32...+212
0...+60	+10...+50	+30...+140	+50...+122
0...+100	+10...+90	+32...+212	+50...+194
0...+120	+20...+100	+32...+250	+68...+212
0...+160	+20...+140	+32...+320	+68...+284
0...+200	+20...+180	+35...+400	+68...+356
0...+300	+30...+270	+35...+570	+86...+518
0...+400	+50...+350	+40...+750	+122...+662
0...+500	+50...+450	0...+930	+122...+842
0...+600	+100...+500	0...+1110	+212...+932

"all stainless steel" version : DS 4", 6" (100-150 mm)

TG8

Primary °C	
Indication Ranges	Measuring Ranges
-200...+100	-170...+70
-200...+50	-170...+20
-120...+40	-100...+20
-80...+40	-60...+20
-50...+50	-40...+40
-40...+80	-30...+70
-40...+60	-30...+50
-40...+40	-30...+30
-30...+50	-20...+40
-20...+120	0...+100
-20...+80	-10...+70
-20...+60	-10...+50
-20...+40	-10...+30
0...+60	+10...+50
0...+80	+10...+70
0...+100	+10...+90
0...+120	+20...+100
0...+160	+20...+140
0...+200	+20...+180
0...+250	+30...+220
0...+300	+30...+270
0...+400	+50...+350
0...+500	+50...+450
0...+600	+100...+500
+50...+450	+100...+400
+100...+500	+150...+450

Primary °F	
Indication Ranges	Measuring Ranges
-350...+200	-300...+150
-350...+100	-300...+50
-200...+100	-170...+70
-100...+100	-80...+80
-40...+180	-20...+160
-20...+120	0...+100
0...200	+20...+180
0...250	+30...+220
+50...+300	+70...+270
+50...+400	+100...+350
+50...+550	+100...+500
+100...+800	+200...+700
+200...+700	+250...+650
+200...+1000	+300...+900
+400...+1200	+500...+1100

Primary °C (external)		Secondary °F (internal)	
Indication Ranges	Measuring Ranges	Indication Ranges	Measuring Ranges
-40...+100	-20...+80	-40...+220	-4...+176
-40...+60	-30...+50	-40...+140	-22...+122
0...+60	+10...+50	+30...+140	+50...+122
0...+100	+10...+90	+32...+212	+50...+194
0...+120	+20...+100	+32...+250	+68...+212
0...+160	+20...+140	+32...+320	+68...+284
0...+200	+20...+180	+35...+400	+68...+356
0...+300	+30...+270	+35...+570	+86...+518
0...+400	+50...+350	+40...+750	+122...+662
0...+500	+50...+450	0...+930	+122...+842
+100...+500	+150...+450	+200...+930	+302...+842
0...+600	+100...+500	0...+1110	+212...+932
+200...+600	+250...+550	+400...+1110	+482...+1022

IN ORDER TO IMPROVE THEIR PRODUCTION, MESSRS. NUOVA FIMA RESERVE THE RIGHT TO THEMSELVES TO MAKE ALL THE MODIFICATIONS THAT THEY DEEM INDISPENSABLE AT ANY TIME. UPDATED DATA-SHEET ARE AVAILABLE ON SITE: **www.nuovafima.com**

Copyright © Nuova Fima srl. All rights reserved. Any part of this publication should not be reproduced without a written Nuova Fima's srl approval

NUOVA FIMA USA Inc.
www.nuovafima.com - e-mail: infousa@nuovafima.com
4123 Hollister, Suite G - TX 77080 Houston
TEL. +1 713.690.9800 - FAX +1 713.690.9803

NUOVA FIMA srl
www.nuovafima.com - e-mail: info@nuovafima.com
P.O. BOX 58 - VIA C. BATTISTI 59 - 28045 INVORIO (NO) ITALY
TEL. +39 0322 253200 - FAX +39 0322 253232

inert gas filled thermometers, all stainless steel construction, ATEX versions, DS 100-150 mm

TG8

RC2 - 05/16

These instruments are designed for explosive atmospheres in food, processing, pharmaceutical, petrochemical industries and conventional and nuclear power plants. They are in conformity with the essential Health and Safety Requirements laid down in European Directive 2014/34/UE for Group II, Category 2G or 2GD equipment in the T1...T6 temperature classes. They are NOT suitable for ZONES 0 and 20.

2G3 Version , Gas

They are available as dry version, DS 100-150 mm and keep the same functional and constructive features as TG8 model. They differ from it as follows :

Ambient temperature: -40...+60 °C.
Max process fluid temperature "Tp": see table (measured on the lowest point of socket).
Windows: high resistance safety glass.
Dial marking: CE Ex II 2G c TX X, model name and serial number.
Special dial: ranges different from standard, custom artworks and dials without Nuova Fima logo are not available.
Options: plexiglas or tempered glass windows, electric contacts and accessories and overtemperature are not available.
Included documentation: Installation manual and Declaration of Conformity.

Class	Tp
T6 : *185°F* (85°C)	*176°F* (80°C)
T5 : *212°F* (100°C)	*203°F* (95°C)
T4 : *275°F* (135°C)	*266°F* (130°C)
T3 : *392°F* (200°C)	*383°F* (195°C)
T2 : *572°F* (300°C)	*554°F* (290°C)
T1 : *842°F* (450°C)	*824°F* (440°C)

2D3 Version , Gas and Dust

They are available as fillable or filled version, DS 100-150 mm and keep the same functional and constructive features as TG8 model. They differ from it as follows :

Damping liquids: glycerine 98%, silicon oil.
Ambient temperature:
-40...+60 °C for dry version;
0...+60 °C for glycerine filling;
-40...+60 °C for silicon oil filling.
Max process fluid temperature "Tp": see table (measured on the lowest point of socket).
Windows: high resistance safety glass.
Dial marking: CE Ex II 2GD c TX X, model name and serial number.
Special dial: ranges different from standard, custom artworks and dials without Nuova Fima logo are not available.
Options: plexiglas or tempered glass windows and overtemperature are not available.
Included documentation: Installation manual and Declaration of Conformity.

Technical File: TF3 - Rev. 1/2016.

IN ORDER TO IMPROVE THEIR PRODUCTION, MESSRS. NUOVA FIMA RESERVE THE RIGHT TO THEMSELVES TO MAKE ALL THE MODIFICATIONS THAT THEY DEEM INDISPENSABLE AT ANY TIME. UPDATED DATA-SHEETS ARE AVAILABLE ON SITE: www.nuovafima.com

NUOVA FIMA USA Inc.
www.nuovafima.com - e-mail: infousa@nuovafima.com
4123 Hollister, Suite G - TX 77080 Houston
TEL. +1 713.690.9800 - FAX +1 713.690.9803

NUOVA FIMA srl
www.nuovafima.com - e-mail: info@nuovafima.com
P.O. BOX 58 - VIA C. BATTISTI 59 - 28045 INVORIO (NO) ITALY
TEL. +39 0322 253200 - FAX +39 0322 253232

NUOVA FIMA S.r.l.
P.O. BOX 58 Via Cesare Battisti, 59
28045 Invorio (NO) Italy
Tel. +39 0322.253200
Fax +39 0322.253232
info@nuovafima.com

www.nuovafima.com

MEASURING INSTRUMENTS - STRUMENTI PER MISURARE

PRESSURE TRANSMITTER

NUOVA FIMA

MT 18

pressure transmitter with local readout DS 4" (100mm)

Compliance to requirements of directives:
EMC 2014/30/EU - PED 2014/68/EU - RoHS 2011/65/EU

Ranges: from *0...15 to 0…20000 psi*
(from 0…1 to 0...1600 bar or equivalent units).
Accuracy (% FSV)**:**
local readout, ≤ 0,5;
transmitter, ≤ 0,25 typical; ≤ 0,5 max.
Working pressure:
100% of FSV for static pressure;
90% of FSV for pulsating pressure.
Over pressure limit: 30% of FSV.
Process fluid temperature: -13...+212 °F (-25...+100 °C);
14…+149 °F (-10…+65°C) when filled.
Output signals: for pressure ranges ≤ *8700 psi* (600 bar) :
4...20 mA, 0...5 Vdc, 0...10 Vdc;
for pressure ranges > *8700 psi* (600 bar) : 4...20 mA.
Calibration: limit-point as per DIN 16086.
Zero calibration: ± 10 % span typical.
Span calibration: ± 10 % span typical.
Compensated temperature range: 14…+176 °F; (-10...+80 °C).
Thermal drift: ≤ 0.011 % span / °F.
Annual drift: ≤ 0,2 % of span.
Supply and max load: see on page 2.
Response time (10...90%): < 3 ms.

8.M28.1 - Standard Model

Safety designation: S1 as per EN 837-2.
Electric connection: junction box as per VDE with exit for cables *ø 0.27"...0.51"* (ø 7...13 mm).
Protection degree: IP 55 as per EN 60529/IEC 529.
Socket material: AISI 316L st.st.
Bourdon tube: AISI 316L st.st. seamless tube.
Case: stainless steel.
Ring: stainless steel, bayonet lock.
Window: tempered glass.
Movement: stainless steel with internal limit stops for minimum and maximum pressure.
Dial: aluminium, white with black markings.
Pointer: adjustable, aluminium, black.
Ambient temperature: -13...+149 °F (-25...+65 °C).
Special versions:
high overpressure: 200% of FSV for pressure ranges ≤ *3000 psi* (250 bar), accuracy of local readout ≤ 1,0% of FSV.

8.M28.3 - Filled Model

Filling liquid: dielectric oil.
Protection degree: IP 67 as per EN 60529/IEC 529.
Ambient temperature: 14...+149 °F (-10...+65 °C).
Other features: as Standard Model.

RG3 - 06/16

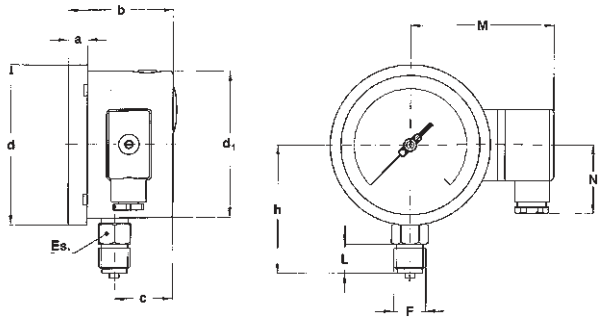

A - LOWER CONNECTION

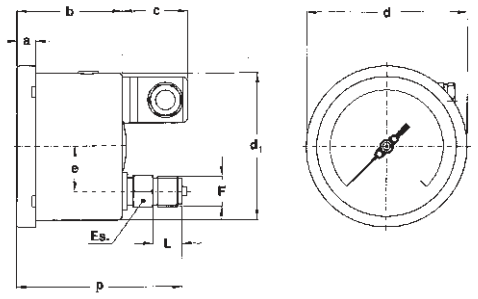

D - BACK CONNECTION

Mounting	F	a	b	c	d	d_1	e	h	p	ES	L	N	M	Weight (1)
Lower	**41M** - G 1/2 A **43M** - 1/2-14 NPT	*0.51"* (13)	*2.85"* (72,3)	*1.57"* (40,1)	*4.35"* (110,6)	*3.97"* (101)		*3.48"* (88,5)	*4.47"* (113,7)	*0.86"* (22)	*0.78"* (20)	*1.35"* (34,5)	*3.55"* (90,4)	*1.67 lbs* (0,76 kg)
Back	**41M** - G 1/2 A **43M** - 1/2-14 NPT	*0.51"* (13)	*2.85"* (72,3)	*1.33"* (34)	*4.35"* (110,6)	*3.97"* (101)	*1.22"* (31)	*3.28"* (83,5)	*4.20"* (106,7)	*0.86"* (22)	*0.51"* (13)			*1.69 lbs* (0,77 kg)

dimensions : *inches* (mm)

(1) add *0.85 lbs* (0,339 kg), when filled

Output signal	4...20 mA 1	0...5 Vdc 4	0...10 Vdc 5
N. wires	2	3	3
Load (Ohm)	$R_L \leq$ (Vin-10)/0,02	$R_L \geq 5$ KΩ	$R_L \geq 10$ KΩ
Supply: +Vin	10…30	8…30	14…30
Ground	(pls. refer to Installation Manual)		

4...20 mA

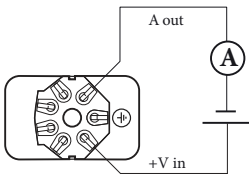

0...5 Vdc
0...10 Vdc

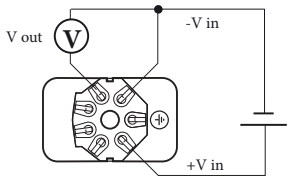

OPTIONS

CRP -	CR gasket, for pressure ranges ≤ *1500 psi* (100 bar); process fluid temperature: -40…+176 °F (-40...+85°C)
EPD -	EPDM gasket, for pressure ranges ≤ *1500 psi* (100 bar); process fluid temperature: -40…+212 °F (-40...+100°C)
NBR -	NBR gasket; process fluid temperature: -13…+176 °F (-25...+85°C)
FPM -	VITON gasket; for pressure ranges ≤ *8500 psi* (600 bar); process fluid temperature: -4…+212 °F (-20...+100°C)
C01 -	Calibration certificate
L22 -	Maximum pointer IP 65 on plexiglas window (2)

(1) Zero calibration not available.

(2) Accuracy refers to the area free from the maximum pointer action.

"HOW TO ORDER" SEQUENCE

Section / Model / Case / Mounting / Diameter / Range / Process connection / Output signal / Gasket / Options

8	M28	1	A	E	41M	1	CRP	C01, L22
		3	D		43M	4	EPD	
						5	NBR	

Copyright © Nuova Fima srl. All rights reserved. Any part of this publication should not be reproduced without a written Nuova Fima's srl approval

NUOVA FIMA USA Inc.
www.nuovafima.com - e-mail: infousa@nuovafima.com
4123 Hollister, Suite G - TX 77080 Houston
TEL. +1 713.690.9800 - FAX +1 713.690.9803

NUOVA FIMA srl
www.nuovafima.com - e-mail: info@nuovafima.com
P.O. BOX 58 - VIA C. BATTISTI 59 - 28045 INVORIO (NO) ITALYY
TEL. +39 0322 253200 - FAX +39 0322 253232

IN ORDER TO IMPROVE THEIR PRODUCTION, MESSRS. NUOVA FIMA RESERVE THE RIGHT TO THEMSELVES TO MAKE ALL THE MODIFICATIONS THAT THEY DEEM INDISPENSABLE AT ANY TIME. UPDATED DATA-SHEETS ARE AVAILABLE ON SITE: www.nuovafima.com

MT OM

pressure transmitter with local readout, for homogenizer DS 4" (100mm)

74-06
Authorization NO. 1599

EMC 2014/30/EU
PED 2014/68/EU

Ranges: *from 0...1500 to 0…20000 psi, relative* (from 0…100 to 0...1600 bar or equivalent units).
Accuracy (% VFS)**:** local readout, ≤ 1.0 (≤ 1.6 for pressure ranges > *8700 psi* - 600 bar); transmitter, ≤ 0.5.
Working pressure: 75% max of FSV.
Over pressure: not suitable.
Ambient temperature: *14...+149 °F* (-10...+65 °C).
Process temperature: *14...+248 °F* (-10...+120 °C).
Max *302°F* (150 °C) for 1 hour during sterilization (S.I.P)[1].
Output signals: for pressure ranges ≤ *8700 psi* (600 bar) : 4...20 mA, 0...5 Vdc, 0...10 Vdc;
for pressure ranges > *8700 psi* (600 bar) : 4...20 mA.
Sensor calibration : limit-point as per DIN 16086.
Zero calibration: ± 10 % span typical.
Span calibration: ± 10 % span typical.
Compensated temperature range: *14…+176 °F*; (-10...+80 °C).
Thermal drift: ≤ *0.011 % span / °F* (≤ 0,02 % span/ °C).
Annual drift: ≤ 0,2 % of span.
Supply and max load: see on page 2.
These types of sensors are intended for Manual (COP) Cleaning.

1) S.I.P. = Steamed In Place

8.MOM.1 - Standard Model

Designation code: S1 as per EN 837-2.
Electric connection: junction box as per VDE with exit for cables ø *0.27...0.51"* (7...13mm).
Sensor: ceramic thick film or stainless steel thin film.
Protection degree: IP 55 as per EN 60529/IEC 529.
Diaphragm: AISI 316L st.st.
Diaphragm seal: AISI 316L st.st. with finishing Ra ≤0,8 µm (welded parts included).
Bourdon tube: AISI 316L st.st. seamless tube.
Ring: stainless steel, bayonet lock.
Window: tempered glass.
Movement: stainless steel.
Dial: aluminium, white with black markings.
Pointer: adjustable, aluminium, black.

8.MOM.3 - Filled Model

Filling liquid: dielectric oil.
Protection degree: IP 67 as per EN 60529/IEC 529.
Other features: as standard model.

RC6 - 02/16

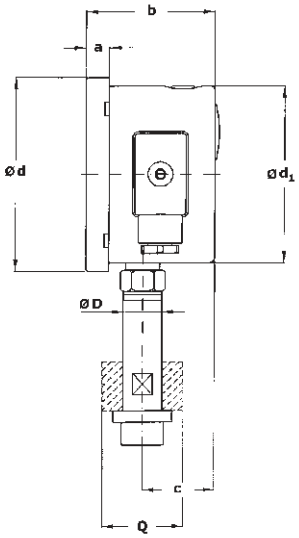

SA 335
(AISI 316 st.st. flange)

A - LOWER CONNECTION

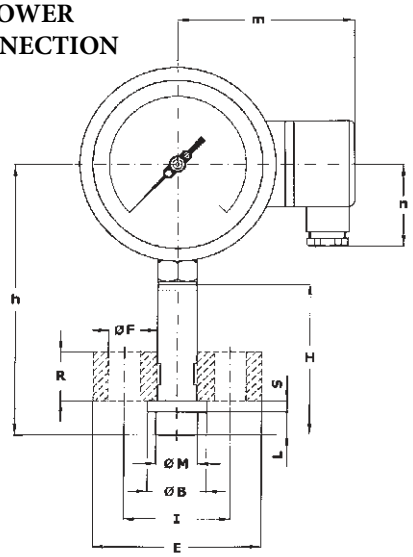

a	b	c	d	d_1	h	m	n
0.51" (13)	*2,84"* (72,3)	*1.59"* (40,6)	*4.35"* (110,6)	*3.97"* (101)	*6.08"* (154,5)	*3.66"* (93,1)	*1.85"* (47)

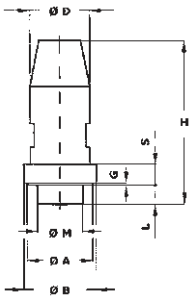

SA 167

Drawing	Ø D	Ø M	Ø A	Ø B	H	S	G	L	Es	E	Ø F	I	R	Q	T	Weight
335 SA 335	*0.86"* (22)	*0.95"* (23,5)		*1.30"* (33,3)	*3.38"* (86)	*0.33"* (8,5)		*0.51"* (13)		*3.74"* (95)	*0.70"* (18)	*2.36"* (60)	*1.10"* (28)	*1.77"* (45)		*4.01 lbs* (1,82 kg)
167 SA 167	*1.22"* (31)	*0.95"* (23,5)	*1.33"* (34)	*1.47"* (37,5)	*3.38"* (86)	*0.43"* (11)	*0.04"* (1)	*0.39"* (10)								*2.84 lbs* (1,29 kg)

dimensions : *inches* (mm)

Output signals	4...20 mA 1	0...5 Vdc 4	0...10 Vdc 5
Nr. of wires	2	3	3
Load (Ohm)	$R_L \leq$ (Vin-10)/0,02	$R_L \geq 5$ KΩ	$R_L \geq 10$ KΩ
Supply: +Vin	10...30	8...30	14...30
Ground	(pls. refer to Installation Manual)		

4...20 mA

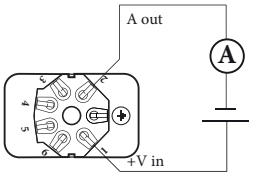

0...5 Vdc
0...10 Vdc

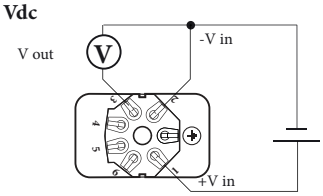

OPTIONS

C01 -	Calibration report
S35 -	Process connection dwg. SA 335, without flange
T31 -	Plexiglas window

"HOW TO ORDER" SEQUENCE

Section / Model / Case / Mounting / Diameter / Range / Process connection / Output signal / Options

8	**MOM**	**1**	**A**	**E**	**335**	**1**	**C01**
		3			**167**	**4**	**S35**
						5	**T31**

IN ORDER TO IMPROVE THEIR PRODUCTION, MESSRS. NUOVA FIMA RESERVE THE RIGHT TO THEMSELVES TO MAKE ALL THE MODIFICATIONS THAT THEY DEEM INDISPENSABLE AT ANY TIME. UPDATED DATA-SHEETS ARE AVAILABLE ON SITE: www.nuovafima.com

Copyright © Nuova Fima srl. All rights reserved. Any part of this publication should not be reproduced without a written Nuova Fima's srl approval

NUOVA FIMA USA Inc.
www.nuovafima.com - e-mail: infousa@nuovafima.com
4123 Hollister, Suite G - TX 77080 Houston
TEL. +1 713.690.9800 - FAX +1 713.690.9803

NUOVA FIMA srl
www.nuovafima.com - e-mail: info@nuovafima.com
P.O. BOX 58 - VIA C. BATTISTI 59 - 28045 INVORIO (NO) ITALY
TEL. +39 0322 253200 - FAX +39 0322 253232

pressure transmitter with ceramic sensor, accuracy 0,5%

Compliance to requirements of directives:
EMC 2014/30/EU - PED 2014/68/EU - RoHS 2011/65/EU

The ST1 model is a compact electronic transmitter with ceramic sensor for air, industrial and technical gases, water and oil.

8.ST1

Measuring ranges: 0...1/0...600 bar, relative; -1...0/-1...+24 bar, relative.
Output signals: 4...20 mA, 0...5 Vcc, 0...10 Vcc, 1...5 Vcc, 0,5...4,5 Ratiometric Vcc.
Non-linearity (BFSL): ≤ ± 0,25 % of the range, according to IEC 61298-2.
Non-repeatability: ≤ 0,1 % of the range, according to IEC 61298-2.
Accuracy: ≤ ± 0,5% of the range (1).
Thermal drift: between 0 and 80°C, 1% of span; 2,5% of span, max (2).
Long term drift: ≤ 0,1 % of span.
Process fluid temperature: -25...+100 °C.
Ambient temperature: -25...+85 °C.
Stocking temperature: -30...+85 °C.
Response time: <4 ms (measuring); <150 ms (switching on).
Emission and immunity: according to EN 61326, (group 1 - class B; industrial applications).
Vibration resistance: 20g (10...2000 Hz, according to IEC 60068-2-6).
Shock resistance: 40g (6 ms, according to IEC 60068-2-27).
Sensor: ceramic in Al_2O_3.
Case: in AISI 316L, vented up to 16 bar.
Protection degree: IP 65 according to IEC 60529 (3).
Process connection: in AISI 316L, hole ø 2,5 mm (with restrictor ø 0,7 mm for measuring ranges ≥ 60 bar).
Weight: 0,14 kg

(1) max measuring error according to IEC 61298-2, including non-linearity and hysteresis (limit-point calibration and reference conditions according to IEC 61298-1); accuracy ≤ ± 0,75% of span for measuring ranges 0...1 bar and 0...600 bar.
(2) + 0,5% of span for measuring range 1 bar
(3) with properly assembled electric connection

Ranges bar, relative	**Overpressure** bar, relative
0...1	**5**
0...1,6	5
0...2,5	5
0...4	8
0...6	12
0...10	20
0...16	32
0...25	50
0...40	80
0...60	120
0...100	200
0...160	320
0...250	500
0...400	600
0...600	800

Other ranges available on demand. Units of measurement available in psi, MPa, kPa too.

RC6 - 01/15

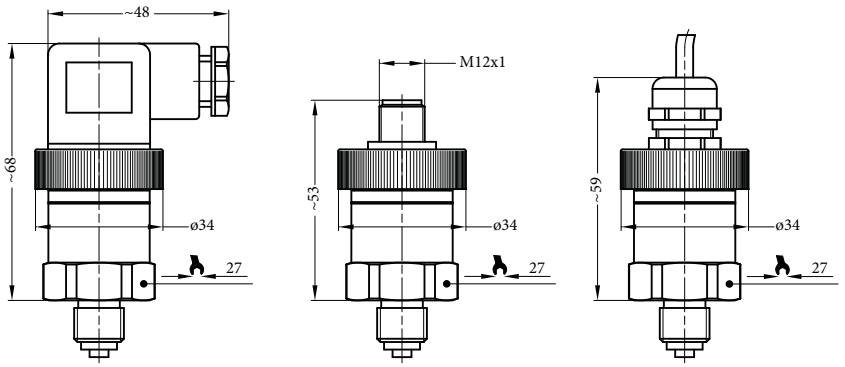

21M - G 1/4 A

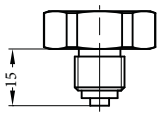

23M - 1/4-18 NPT

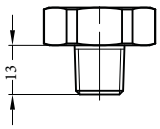

43M - 1/2-18 NPT

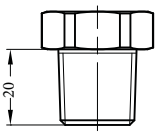

41M - G 1/2 A

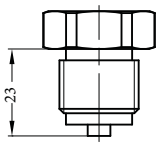

2DM - G 1/4 A
DIN 3852-E

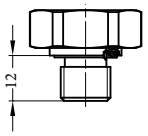

Tightening torque 20...30 Nm

Output signals	**4...20 mA** **1**	**0...5 Vdc** **4**	**0...10 Vdc** **5**	**1...5 Vdc** **8**	**0,5...4,5 Vdc** ratiometric - **R**
N. of wires	2	3	3	3	3
Load max (Ohm)	$R_L \leq$ (Ub-8)/0,02	$R_L \geq 5$ KΩ	$R_L \geq 10$ KΩ	$R_L \geq 5$ KΩ	$R_L \geq 4{,}5$ KΩ
Supply: Ub (Vdc)	8…30	8…30	14…30	8…30	5 ±10%
Absorbed current (mA)	< 25	< 10	< 10	< 10	< 10

Other output signals available on request. All output signals are provided of protection against short cicuit and polarity inversion. Insulation tension 500 Vdc.

WIRING

	EN 175301-803 A		M12 x 1		Cable exit	
Cod.	**12G**	**123**	**132**	**134**	**MBG**	**MBV**
N. of wires	**2**	**3**	**2**	**3**	**2**	**3**
Supply connection: Ub	1	1	1	1	brown	brown
Negative connection: 0V	2	2	3	3	white	white
Signal: S +	-	3	-	4	-	green
Ground	GND	GND	2	2	grey	grey

OPTIONS

--- Electric connection EN 175301-803 A	**EPD** - EPDM gasket for sensor
M12 - Electric connection M12 x 1, 4 poles	**NBR** - NBR gasket for sensor (1)
PVC - Electric connection with 1 mt PVC cable	**C01** - Calibration certificate
FPM - FPM gasket for sensor (1)	**VS3** - Restrictor ø 0,3 mm
CRP - CR gasket for sensor	

(1)Available for process connection DIN 3852-E.

"HOW TO ORDER" SEQUENCE

Section	Model	Range	Process connection	Output signal	Electric connection	Wiring	Gasket	Options
8	**ST1**		**21M**	**1**	**---**	**12G...134**	**FPM**	**C01...VS3**
			2DM	**4**	**M12**	**MBG, MBV**	**CRP**	
			23M	**5**	**PVC**		**EPD**	
			41M	**8**			**NBR**	
			43M	**R**				

IN ORDER TO IMPROVE THEIR PRODUCTION, MESSRS. NUOVA FIMA RESERVE THE RIGHT TO THEMSELVES TO MAKE ALL THE MODIFICATIONS THAT THEY DEEM INDISPENSABLE AT ANY TIME. UPDATED DATA-SHEETS ARE AVAILABLE ON SITE: www.nuovafima.com
IN ORDER TO IMPROVE THEIR PRODUCTION, MESSRS. NUOVA FIMA RESERVE THE RIGHT TO THEMSELVES TO MAKE ALL THE MODIFICATIONS THAT THEY DEEM INDISPENSABLE AT ANY TIME. UPDATED DATA-SHEETS ARE AVAILABLE ON SITE: www.nuovafima.com

Copyright © Nuova Fima S.r.l. All rights reserved. Any part of this publication should not be reproduced without a written Nuova Fima's S.r.l. approval

NUOVA FIMA USA Inc.
www.nuovafima.com - e-mail: infousa@nuovafima.com
4123 Hollister, Suite G - TX 77080 Houston
TEL. +1 713.690.9800 - FAX +1 713.690.9803

NUOVA FIMA srl
www.nuovafima.com - e-mail: info@nuovafima.com
P.O. BOX 58 - VIA C. BATTISTI 59 - 28045 INVORIO (NO) ITALY
TEL. +39 0322 253200 - FAX +39 0322 253232

pressure transmitter with piezoresistive sensor, accuracy 0,35%

CE

Compliant to directives
EMC EMC 2014/30/EU - PED 2014/68/EU - RoHS 2002/95/EU

The ST2 model is a compact electronic transmitter with piezoresistive sensor with excellent linearity, for air, industrial and technical gases, water, oil and process media compatible with AISI 316.

8.ST2

Measuring ranges: 0...0,1/0...1000 bar, relative; -1...0/-1...+24 bar, relative; 0...1/0..25 bar, absolute.
Output signals: 4...20 mA, 0...5 Vcc, 0...10 Vcc, 1...5 Vcc, 0,5...4,5 Ratiometric Vcc.
Non-linearity (BFSL): ≤ ± 0,175 % of the range, according to IEC 61298-2.
Non-repeatability: ≤ 0,1 % of the range, according to IEC 61298-2.
Accuracy: ≤ ± 0,35% of the range (1).
Thermal drift: between 0 and 80°C, 1% of span; 2,5% of span, max (2).
Long term drift: ≤ 0,1 % of span.
Process fluid temperature: -25...+100 °C.
Ambient temperature: -25...+85 °C.
Stocking temperature: -30...+85 °C.
Response time: <4 ms (measuring); <150 ms (switching on).
Emission and immunity: according to EN 61326, (group 1 - class B; industrial applications).
Vibration resistance: 20g (10...2000 Hz, according to IEC 60068-2-6).
Shock resistance: 40g (6 ms, according to IEC 60068-2-27).
Sensor: piezoresistive, silicon oil.
Case: in AISI 316L, vented up to 16 bar.
Protection degree: IP 65 according to IEC 60529 (3).
Process connection: in AISI 316L, hole ø 2,5 mm (with restrictor ø 0,7 mm for measuring ranges ≥ 60 bar).
Weight: 0,14 kg

(1) max measuring error according to IEC 61298-2, including non-linearity and hysteresis (limit-point calibration and reference conditions according to IEC 61298-1).
(2) + 0,5% of span for measuring range ≤ 0,6 bar
(3) with properly assembled electric connection

Ranges bar, relative	**Overpressure** bar, relative
0...0,1	0,3
0...0,16	0,5
0...0,25	0,8
0...0,4	1,2
0...0,6	1,8
0...1	2
0...1,6	3,2
0...2,5	5
0...4	8
0...6	12
0...10	20
0...16	32
0...25	50
0...40	80
0...60	120
0...100	200
0...160	320
0...250	380
0...400	600
0...600	900
0...1000	1500

Other ranges available on demand. Units of measurement available in psi, MPa, kPa too.

pressure transmitter with piezoresistive sensor, accuracy 0,35%

RC5 - 01/15

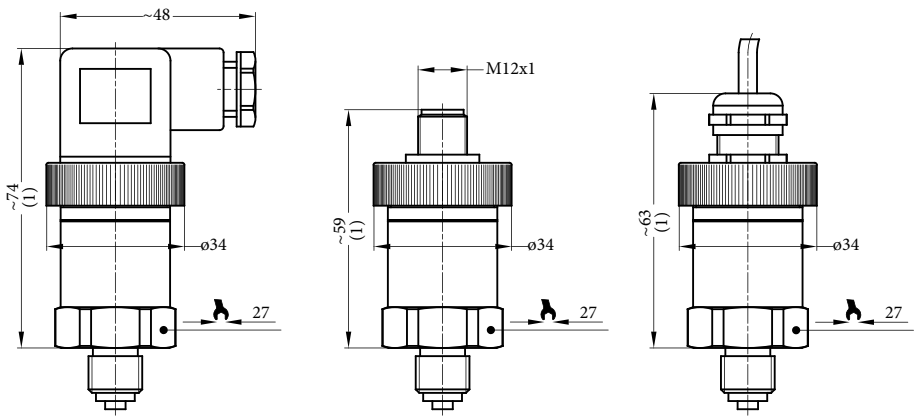

Dimensions: mm; (1) for pressures ≥ 160 bar add 5 mm

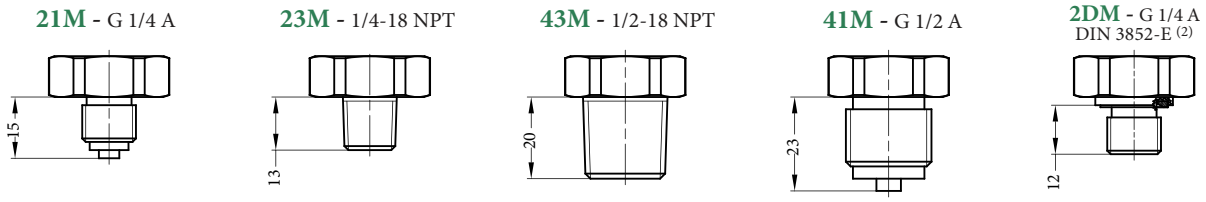

Torque 20...30 Nm; (2) process connection DIN 3852-E for pressures ≤ 600 bar

Output signals	4...20 mA 1	0...5 Vdc 4	0...10 Vdc 5	1...5 Vdc 8	0,5...4,5 Vdc ratiometric - R
N. of wires	2	3	3	3	3
Load max (Ohm)	$R_L \leq$ (Ub-8)/0,02	$R_L \geq 5$ KΩ	$R_L \geq 10$ KΩ	$R_L \geq 5$ KΩ	$R_L \geq 4,5$ KΩ
Supply: +Ub (Vdc)	8…30	8…30	14…30	8…30	5 ±10%
Absorbed current (mA)	< 25	< 10	< 10	< 10	< 10

Other output signals available on demand. All output signals are provided of protection against short cicuit and polarity inversion. Insulation tension 500 Vdc.

WIRING

	EN 175301-803 A		M12 x 1		Cable exit	
Cod.	12G	123	132	134	MBG	MBV
N. of wires	2	3	2	3	2	3
Supply connection: Ub	1	1	1	1	brown	brown
Negative connection: 0V	2	2	3	3	white	white
Signal: S +	-	3	-	4	-	green
Ground	GND	GND	2	2	grey	grey

OPTIONS

--- Electric connection EN 175301-803 A	EPD - EPDM gasket for sensor
M12 - Connector M12 x 1, 4 poles	NBR - NBR gasket for sensor (1)
PVC - Cable exit, with 1 mt PVC cable	C01 - Calibration certificate
FPM - FPM gasket for sensor (1)	A02 - Accuracy ≤ ± 0,25% of the range (2)
CRP - CR gasket for sensor	VS3 - Restrictor ø 0,3 mm for pressure range 60 bar

(1) Available for process connection DIN 3852-E.

(2) Non-Linearity (BFSL) ≤ ± 0,125% of span; for measuring ranges ≤ 60 bar

"HOW TO ORDER" SEQUENCE

Section	Model	Range	Process connection	Output signal	Electric connection	Wiring	Gasket	Options
8	ST2	21M	1	---	12G...134	FPM	C01...VS3
		2DM	4	M12	MBG. MBV	CRP	
		23M	5	PVC		EPD	
		41M	8			NBR	
		43M	R				

IN ORDER TO IMPROVE THEIR PRODUCTION, MESSRS. NUOVA FIMA RESERVE THE RIGHT TO THEMSELVES TO MAKE ALL THE MODIFICATIONS THAT THEY DEEM INDISPENSABLE AT ANY TIME. UPDATED DATA-SHEETS ARE AVAILABLE ON SITE: www.nuovafima.com

Copyright © Nuova Fima srl. All rights reserved. Any part of this publication should not be reproduced without a written Nuova Fima's srl approval

NUOVA FIMA USA Inc.
www.nuovafima.com - e-mail: infousa@nuovafima.com
4123 Hollister, Suite G - TX 77080 Houston
TEL. +1 713.690.9800 - FAX +1 713.690.9803

NUOVA FIMA srl
www.nuovafima.com - e-mail: info@nuovafima.com
P.O. BOX 58 - VIA C. BATTISTI 59 - 28045 INVORIO (NO) ITALY
TEL. +39 0322 253200 - FAX +39 0322 253232

ST 9

pressure transmitter with piezoresistive sensor, accuracy 0,35%

Compliance to requirements of directives:
EMC 2014/30/EU - PED 2014/68/EU - RoHS 2011/65/EU

The ST9 model is an electronic transmitter with piezoresistive sensor with excellent linearity, with adjustable zero and span, for air, industrial and technical gases, water, oil and process media compatible with AISI 316. When assembled to diaphragm seals, it measures the pressure of corrosive, highly viscous and hot fluids.

8.S09

Measuring ranges: 0...0,1/0...1000 bar, relative; -1...0/-1...+24 bar, relative; 0...1/0..25 bar, absolute.
Output signal: 4...20 mA.
Non-linearity (BFSL): ≤ ± 0,175 % of the range, according to IEC 61298-2.
Non-repeatability: ≤ 0,1 % of the range, according to IEC 61298-2.
Accuracy: ≤ ± 0,35% of the range (1).
Zero and span adjustement: ± 10 % span typical.
Thermal drift: between 0 and 80°C, 1% of span; 2,5% of span, max (2).
Long term drift: ≤ 0,2 % of span.
Process fluid temperature: -25...+100 °C.
Ambient temperature: -25...+85 °C.
Stocking temperature: -30...+85 °C.
Response time: <4 ms (measuring); <150 ms (switching on).
Emission and immunity: according to EN 61326, (group 1 - class B; industrial applications).
Vibration resistance: 20g (10...2000 Hz, according to IEC 60068-2-6).
Shock resistance: 40g (6 ms, according to IEC 60068-2-27).
Sensor: piezoresistive, silicon oil.
Case: in AISI 316L, vented up to 16 bar.
Protection degree: IP 65 according to IEC 60529 (3).
Process connection: in AISI 316L, hole ø 2,5 mm (with restrictor ø 0,7 mm for measuring ranges ≥ 60 bar).
Weight: 0,23kg

(1) max measuring error according to IEC 61298-2, including non-linearity and hysteresis (limit-point calibration and reference conditions according to IEC 61298-1).
(2) + 0,5% of span for measuring range ≤ 0,6 bar
(3) with properly assembled electric connection

Ranges bar, relative	**Overpressure** bar, relative
0...0,1	0,3
0...0,16	0,5
0...0,25	0,8
0...0,4	1,2
0...0,6	1,8
0...1	2
0...1,6	3,2
0...2,5	5
0...4	8
0...6	12
0...10	20
0...16	32
0...25	50
0...40	80
0...60	120
0...100	200
0...160	320
0...250	380
0...400	600
0...600	900
0...1000	1500

Other ranges available on demand. Units of measurement available in psi, MPa, kPa too.

Output signal	**4...20 mA** **1**
N. wires	2
Load (Ohm)	$R_L \leq (Ub-10)/0,02$
Supply: +Ub	10…30

Other output signals available on demand. All output signals are provided of protection against short cicuit and polarity inversion. Insulation tension 500 Vdc.

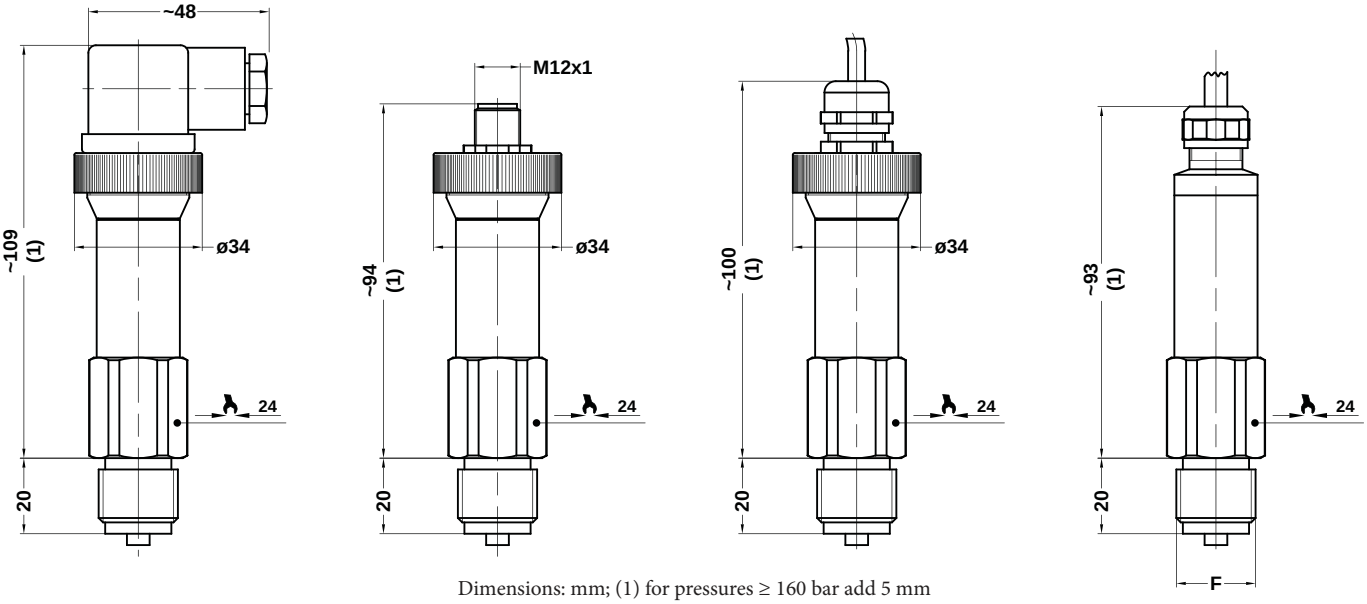

Dimensions: mm; (1) for pressures ≥ 160 bar add 5 mm

21M - G 1/4 A **23M** - 1/4-18 NPT **43M** - 1/2-18 NPT **41M** - G 1/2 A

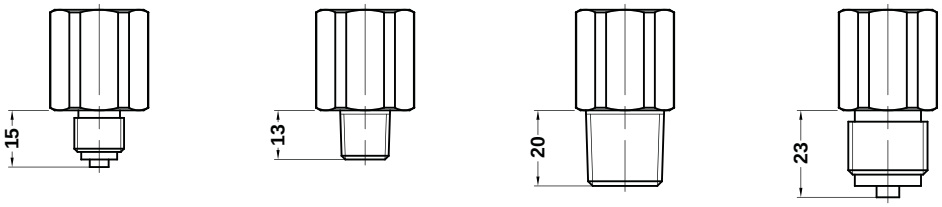

Torque 20...30 Nm

WIRING

	DIN 175301-803 A	M12 x 1	Cable exit
N. of wires	**2**	**2**	**2**
Supply connection: Ub+	1	1	brown
Negative connection; 0V-	2	3	white
Output signal: S+	-	-	-
Ground	GND	2	grey

OPTIONS

M12 - Connector M12 x 1, 4 poles	**EPD** - EPDM gasket for sensor
PVC - Cable exit, with 1 mt PVC cable	**NBR** - NBR gasket for sensor
U68 - Cable exit IP68, with 1 mt polyurethane cable	**C01** - Calibration certificate
FPM - VITON gasket for sensor	**A02** - Accuracy ≤ ± 0,25% of the range (1)
CRP - CR gasket for sensor	**VS3** - Restrictor ø 0,3 mm

(1) Non-Linearity (BFSL) ≤ ± 0,125% of span; for measuring ranges ≤ 60 bar

"HOW TO ORDER" SEQUENCE

Section / Model / Range / Process connection / Output signal / Electric connection / Gasket / Options

8	**S09**	**41M**	**1**	**---**	**FPM**	**C01...VS3**
		21M		**M12**	**CRP**	
				PVC	**EPD**	
				U 68	**NBR**	

IN ORDER TO IMPROVE THEIR PRODUCTION, MESSRS. NUOVA FIMA RESERVE THE RIGHT TO THEMSELVES TO MAKE ALL THE MODIFICATIONS THAT THEY DEEM INDISPENSABLE AT ANY TIME. UPDATED DATA-SHEETS ARE AVAILABLE ON SITE www.nuovafima.com

Copyright © Nuova Fima S.p.A. All rights reserved. Any part of this publication should not be reproduced without a written Nuova Fima's S.p.A. approval

NUOVA FIMA USA Inc.
www.nuovafima.com - e-mail: infousa@nuovafima.com
4123 Hollister, Suite G - TX 77080 Houston
TEL. +1 713.690.9800 - FAX +1 713.690.9803

NUOVA FIMA srl
www.nuovafima.com - e-mail: info@nuovafima.com
P.O. BOX 58 - VIA C. BATTISTI 59 - 28045 INVORIO (NO) ITALY
TEL. +39 0322 253200 - FAX +39 0322 253232

ST 18

pressure transmitter with ceramic sensor, accuracy 0,5%

Compliance to requirements of directives:
EMC 2014/30/EU - PED 2014/68/EU - RoHS 2011/65/EU

The ST18 model is an electronic transmitter with ceramic sensor, with adjustable zero and span, for air, industrial and technical gases, water and oil. When assembled to diaphragm seals, it measures the pressure of corrosive, highly viscous and hot fluids.

8.ST18

Measuring ranges: 0...1/0...600 bar, relative; -1...0/-1...+24 bar, relative; 0...1/0..25 bar, absolute.
Output signals: 4...20 mA, 0...5 Vcc, 0...10 Vcc.
Non-linearity (BFSL): ≤ ± 0,25 % of the range, according to IEC 61298-2.
Non-repeatability: ≤ 0,1 % of the range, according to IEC 61298-2.
Accuracy: ≤ ± 0,5% of the range (1).
Thermal drift: between 0 and 80°C, 1% of span; 2,5% of span, max (2).
Long term drift: ≤ 0,1 % of span.
Zero and span adjustement: ± 10 % span typical.
Process fluid temperature: -25...+100 °C.
Ambient temperature: -25...+85 °C.
Stocking temperature: -30...+85 °C.
Response time: <4 ms (measuring); <150 ms (switching on).
Emission and immunity: according to EN 61326, (group 1 - class B; industrial applications).
Vibration resistance: 20g (10...2000 Hz, according to IEC 60068-2-6).
Shock resistance: 40g (6 ms, according to IEC 60068-2-27).
Sensor: ceramic in Al_2O_3.
Case: in AISI 316L, vented up to 16 bar.
Protection degree: IP 65 according to IEC 60529 (3).
Process connection: in AISI 316L, hole ø 2,5 mm (with restrictor ø 0,7 mm for measuring ranges ≥ 60 bar).
Weight: 0,18 kg

(1) max measuring error according to IEC 61298-2, including non-linearity and hysteresis (limit-point calibration and reference conditions according to IEC 61298-1); accuracy ≤ ± 0,75% of span for measuring ranges 0...1 bar and 0...600 bar.
(2) + 0,5% of span for measuring range 1 bar
(3) with properly assembled electric connection

Ranges bar, relative	**Overpressure** bar, relative
0...1	5
0...1,6	5
0...2,5	5
0...4	8
0...6	12
0...10	20
0...16	32
0...25	50
0...40	80
0...60	120
0...100	200
0...160	320
0...250	500
0...400	600
0...600	800

Other ranges available on demand. Units of measurement available in psi, MPa, kPa too.

pressure transmitter with ceramic sensor, accuracy 0,5%

ST 18

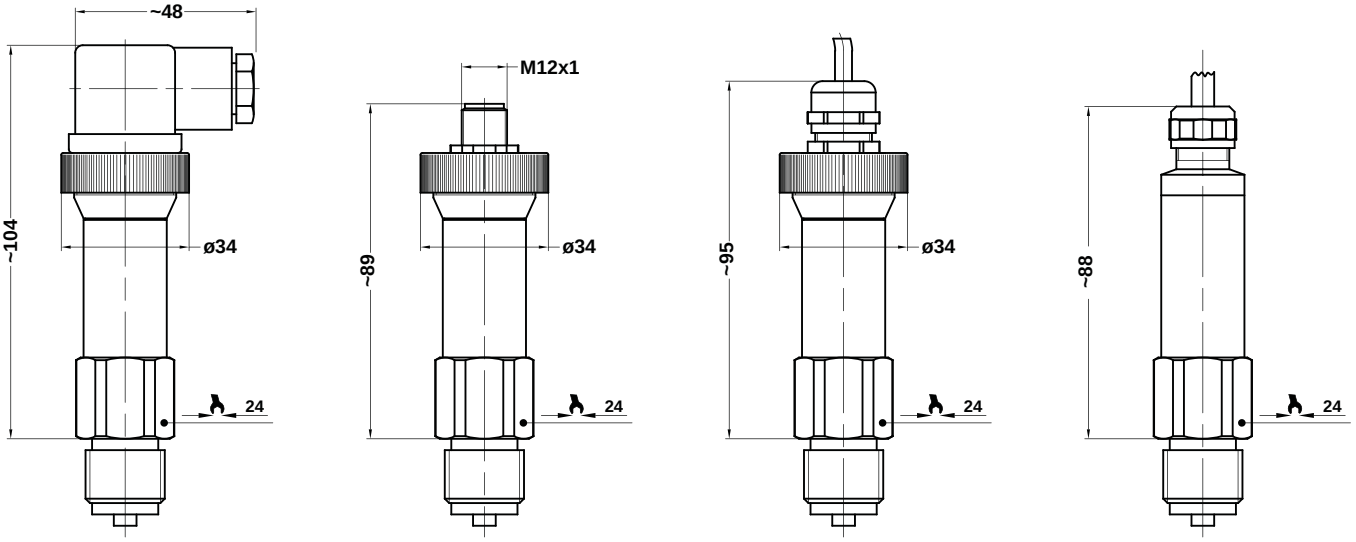

Torque 20...30 Nm

21M - G 1/4 A

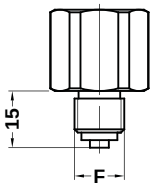

23M - 1/4-18 NPT

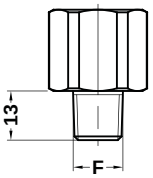

43M - 1/2-18 NPT

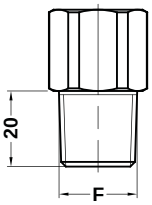

41M - G 1/2 A

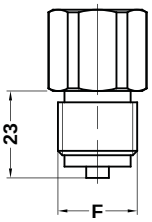

Output signals	**4...20 mA** **1**	**0...5 Vdc** **4**	**0...10 Vdc** **5**
N. of wires	2	3	3
Load max (Ohm)	$R_L \leq (Ub-8)/0,02$	$R_L \geq 5$ KΩ	$R_L \geq 10$ KΩ
Supply: +Ub (Vdc)	8…30	8…30	14…30
Absorbed current (mA)	< 25	< 10	< 10

All output signals are provided of protection against short cicuit and polarity inversion. Insulation tension 500 Vdc.

WIRING

	DIN 175301-803 A		M12 x 1		Cable exit	
N. of wires	**2**	**3**	**2**	**3**	**2**	**3**
Supply connector: Ub	1	1	1	1	brown	brown
Negative connector: 0V	2	2	3	3	white	white
Signal: S +	-	3	-	4	-	green
Ground	GND	GND	2	2	grey	grey

OPTIONS

M12 - Connector M12 x 1, 4 poles	**EPD** - EPDM gasket for sensor
PVC - Cable exit, with 1 mt PVC cable	**NBR** - NBR gasket for sensor
U68 - Cable exit IP68, with 1 mt polyurethane cable	**C01** - Calibration certificate
FPM - FPM gasket for sensor	**VS3** - Restrictor ø 0,3 mm
CRP - CR gasket for sensor	

"HOW TO ORDER" SEQUENCE

Section	Model	Range	Process connection	Output signal	Gasket	Options
8	**S18**		**41M**	**1**	**FPM**	**C01...VS3**
			43M	**4**	**CRP**	
			21M	**5**	**EPD**	
			23M		**NBR**	

Copyright © Nuova Fima srl. All rights reserved. Any part of this publication should not be reproduced without a written Nuova Fima's srl approval

NUOVA FIMA USA Inc.
www.nuovafima.com - e-mail: infousa@nuovafima.com
4123 Hollister, Suite G - TX 77080 Houston
TEL. +1 713.690.9800 - FAX +1 713.690.9803

NUOVA FIMA srl
www.nuovafima.com - e-mail: info@nuovafima.com
P.O. BOX 58 - VIA C. BATTISTI 59 - 28045 INVORIO (NO) ITALY
TEL. +39 0322 253200 - FAX +39 0322 253232

RC8 - 01/15

IN ORDER TO IMPROVE THEIR PRODUCTION, MESSRS. NUOVA FIMA RESERVE THE RIGHT TO THEMSELVES TO MAKE ALL THE MODIFICATIONS THAT THEY DEEM INDISPENSABLE AT ANY TIME. UPDATED DATA-SHEETS ARE AVAILABLE ON SITE: www.nuovafima.com

ST MA/LC

ceramic pressure transmitter
flush diaphragm
0,5% accuracy

Compliance to requirements of directives:
EMC 2014/30/EU - PED 2014/68/EU - RoHS 2011/65/EU

8.SMA/LC

Ranges: 0…0,1 / 0…600 bar, relative.
Output signals: 4...20 mA, 0...5 Vcc, 0...10 Vcc.
Non-linearity (BFSL): ≤ 0,25% of span as per IEC 61298-2.
Non-repeatability: ≤ 0,1% of span as per IEC 61298-2.
Accuracy : ≤ ± 0,5 of span (1).
Annual drift: ≤ 0,2 % of span.
Zero calibration and span calibration: ± 5 % span typical.
Process fluid temperature: *-22...+212 °F* (-30...+100 °C); *-22...+302°F* (-30...+150 °C) for version with heat dissipator cod. **8.SMA...TA3**).
Ambient temperature: *-13...+185 °F* (-20...+85 °C).
Storage temperature : *-40…+185 °F* (-40...+100 °C).
Response time: < 10ms (adjustment): < 150ms (power on).
Emission and immunity standard: as per IEC61326, (group 1 - B class; industrial application).
Vibration resisitance: 20g (10...2000 Hz, as per IEC m60068-2-6).
Shock resisitance: 40g (6ms, as per IEC m60068-2-27).
Sensor: ceramic.
Case: stainless steel, vented for pressure ranges ≤ *230 psi* (≤ 16 bar).
Protection degree: IP 65 as per EN 60529 (2).
Process connection: AISI 316L st.st. as per DIN 3852.
Diaphragm: AISI 316L st.st.
Sealing: see the available sealings at page 2.
Filling liquid: silicon oil.
Weight: G 1/2: 0,2 kg; G 1: 0,3 kg.

(1) Max error of measurement as per IEC61298-2, non-linearity and hysteresis included (extreme values calibration according to standard IEC 61298-1 when in vertical position)
(2) With properly assembled power connection.

Ranges bar, relative (1)	**Thermal drift** ≤ % span / °C (average) G 3/4 B	G 1/2 B	**Overpressure** bar, relative
0...1	0,10		2,5
0...1,6	0,08		5
0...2,5	0,06		5
0...4	0,05		8
0...6	0,04		12
0...10		0,04	20
0...16		0,03	32
0...25		0,02	50
0...40		0,02	80
0...60		0,02	120
0...100		0,02	200
0...160		0,02	320
0...250		0,02	500
0...400		0,02	600
0...600		0,02	600

(1) Other unit of measurement and intermediate ranges are available, as requested by customer.

RCS - 06/16

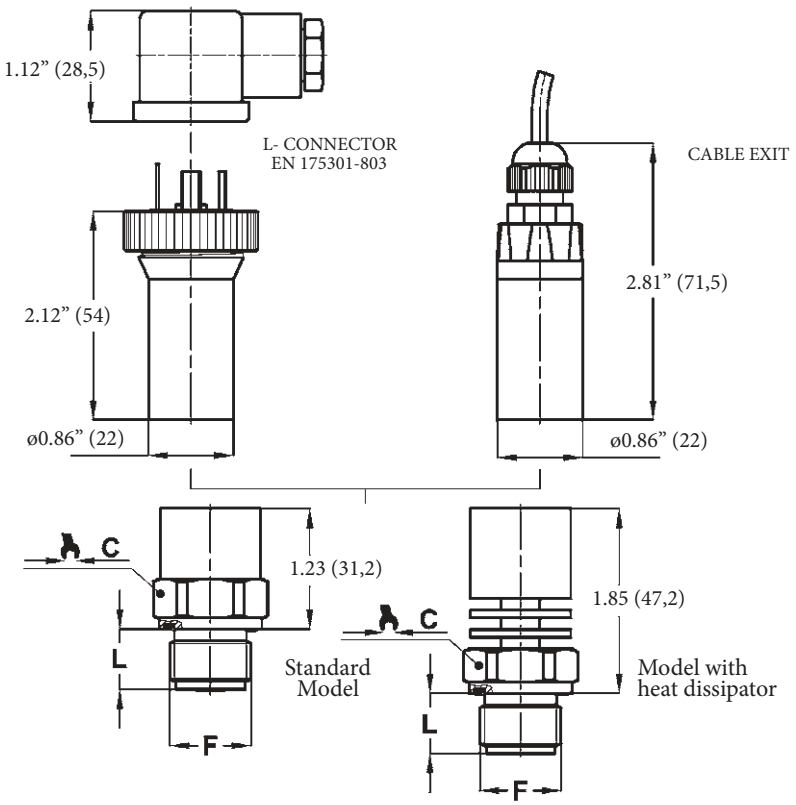

F	L	C
41M G 1/2 A	*0.62"* (16)	*1.06"* (27)
51M G 3/4 A	*0.64"* (16,5)	*1.25"* (32)

dimensions : *inches* (mm)

Output signals	**4...20 mA** **1**	**0...5 Vdc** **4**	**0...10 Vdc** **5**
N. of wires	2	3	3
Load max (Ohm)	$R_L \leq$ (Ub-8)/0,02	$R_L \geq 5$ KΩ	$R_L \geq 10$ KΩ
Supply: +Ub (Vdc)	8…30	8…30	14…30
Absorbed current (mA)	< 25	< 10	< 10

All output signals are provided of protection against short cicuit and polarity inversion. Insulation tension 500 Vdc.

WIRING

	DIN 175301-803 A		M12 x 1		Cable exit	
N. of wires	**2**	**3**	**2**	**3**	**2**	**3**
Supply connector: Ub	1	1	1	1	brown	brown
Negative connector: 0V	2	2	3	3	white	white
Signal: S +	-	3	-	4	-	green
Ground	GND	GND	2	2	grey	grey

OPTIONS

FPM - Sealing FPM (-20...+150 °C)	**C01** - Calibration report
NBR - Sealing NBR (-30...+100 °C)	**PVC** - Electrical connection with cable gland with PVC cable
EPD - Sealing EPDM (-30...+150 °C)	**U68** - Electrical connection with cable gland with PUR cable (3)

(1) max 300 bar per T.p. > 100°C
(2) max 200 bar
(3) Zero adjustment not available

"HOW TO ORDER" SEQUENCE

Section / Model / Special versions / Range / Process connection / Output signal / Gasket / Options

8	**SMA**	**---**	**41M**	**1**	**FPM C01...U68**
		TA3	**51M**	**4**	
				5	

IN ORDER TO IMPROVE THEIR PRODUCTION, MESSRS. NUOVA FIMA RESERVE THE RIGHT TO THEMSELVES TO MAKE ALL THE MODIFICATIONS THAT THEY DEEM INDISPENSABLE AT ANY TIME. UPDATED DATA-SHEETS ARE AVAILABLE ON SITE: **www.nuovafima.com**

Copyright © Nuova Fima srl. All rights reserved. Any part of this publication should not be reproduced without a written Nuova Fima's srl approval

NUOVA FIMA USA Inc.
www.nuovafima.com - e-mail: infousa@nuovafima.com
4123 Hollister, Suite G - TX 77080 Houston
TEL. +1 713.690.9800 - FAX +1 713.690.9803

NUOVA FIMA srl
www.nuovafima.com - e-mail: info@nuovafima.com
P.O. BOX 58 - VIA C. BATTISTI 59 - 28045 INVORIO (NO) ITALY
TEL. +39 0322 253200 - FAX +39 0322 253232

ST MA/DG

piezoresistive pressure transmitter flush diaphragm, double sealing, 0,5% accuracy

Compliance with requirements of directives:
EMC 2014/30/CE - PED 2014/68/UE - RoHS 2011/65/UE

8.SMA/DG

Ranges: 0…0,1 / 0…600 bar, relative; -0,4...0/-1...+24 bar, relative; 0...0,4/0...16 bar, absolute
Output signals: 4...20 mA.
Non-linearity (BFSL): ≤ 0,25% of span as per IEC 61298-2.
Non-repeatability: ≤ 0,1% of span as per IEC 61298-2.
Accuracy : ≤ ± 0,5 of span (1).
Annual drift: ≤ 0,2 % of span.
Zero calibration and span calibration: ± 5 % span typical.
Process fluid temperature: *-22...+212 °F* (-30...+100 °C).
Ambient temperature: *-13...+185 °F* (-20...+85 °C).
Storage temperature : *-40…+185 °F* (-40...+100 °C).
Response time: < 10ms (adjustment): < 150ms (power on).
Emission and immunity standard: as per IEC61326, (group 1 - B class; industrial application).
Vibration resisitance: 20g (10...2000 Hz, as per IEC m60068-2-6).
Shock resisitance: 40g (6ms, as per IEC m60068-2-27).
Sensor: piezoresistive.
Case: stainless steel, vented for pressure ranges ≤ *230 psi* (≤ 16 bar).
Protection degree: IP 65 as per EN 60529 (2).
Process connection and diaphragm: AISI 316L st.st.
Sealing: double, for a safer tight (see the available sealings at page 2)
Filling liquid: silicon oil.
Weight: G 1/2: 0,2 kg; G 1: 0,33 kg.

(1) Max error of measurement as per IEC61298-2, non-linearity and hysteresis included (extreme values calibration according to standard IEC 61298-1 when in vertical position)
(2) With properly assembled power connection.

Ranges bar, relative (1)	**Thermal drift** ≤ % span / °C (average) G 1 B	G 1/2 B	**Overpressure** bar, relative
0...0,1	0,04		0,3
0...0,16	0,04		0,5
0...0,25	0,04		0,8
0...0,4	0,03		1,2
0...0,6	0,03		1,8
0...1	0,03		2
0...1,6	0,03		3,2
0...2,5		0,03	5
0...4		0,03	8
0...6		0,03	12
0...10		0,02	20
0...16		0,02	32
0...25		0,02	50
0...40		0,02	80
0...60		0,02	120
0...100		0,02	200
0...160		0,02	320
0...250		0,02	500
0...400		0,02	600
0...600		0,02	600

(1) Other ranges available on demand.

piezoresistive pressure transmitter
flush diaphragm, double sealing, 0,5% accuracy

ST MA/DG

RG - 09/16

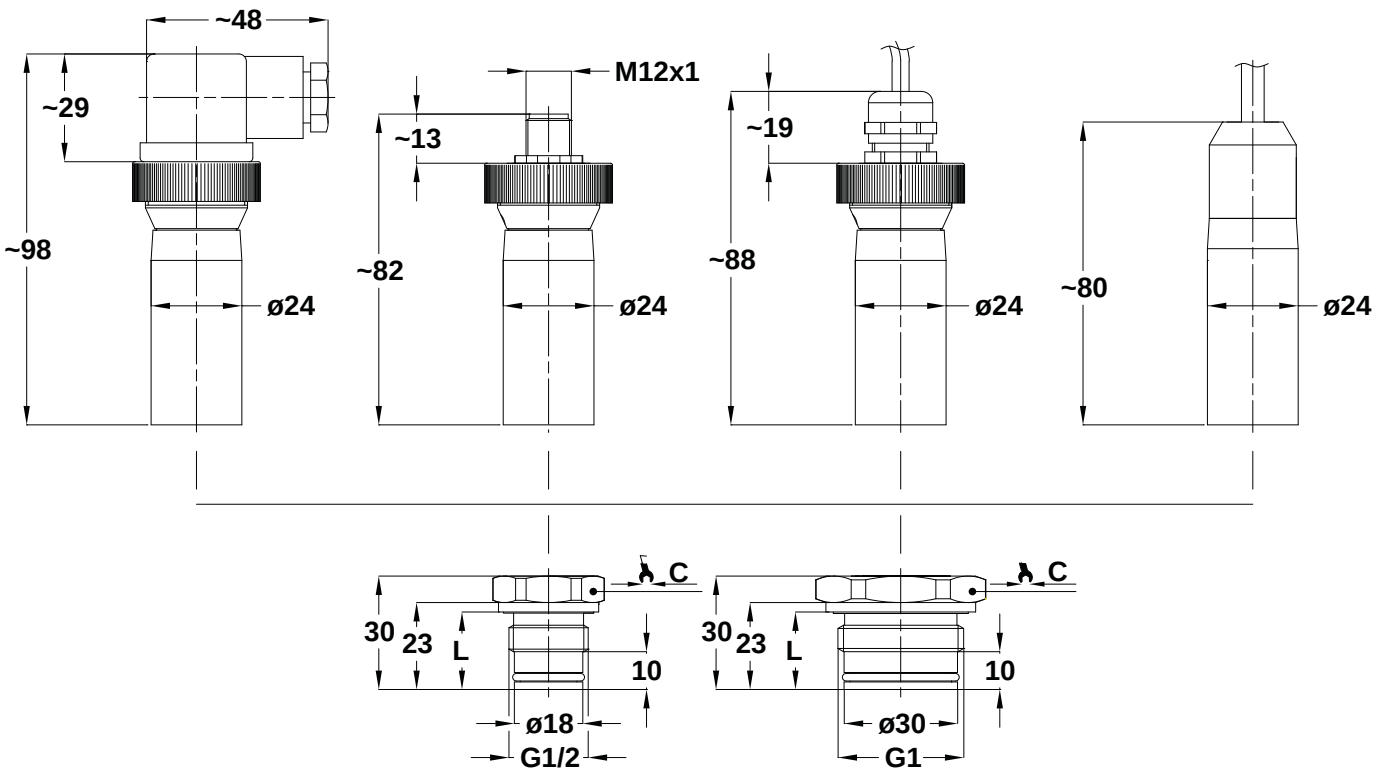

Output signals	4…20 mA 4...20 mA
N. of wires	2
Load max (Ohm)	$R_L \leq (Ub-8)/0,02$
Supply: +Ub (Vdc)	10…30
Absorbed current (mA)	< 25

All output signals are provided of protection against short cicuit and polarity inversion. Insulation tension 500 Vdc.

F	L	C
41M G 1/2 A	*0.62"* (20,5)	*1.06"* (27)
61M G 1 A	*0.64"* (20,5)	*1.25"* (41)

dimensions : *inches* (mm)

WIRING

	DIN 175301-803 A	M12 x 1	Cable exit
N. of wires	**2**	**2**	**2**
Supply connector: Ub	1	1	brown
Negative connector: 0V	2	3	white
Signal: S +	-	-	-
Ground	GND	2	grey

OPTIONS

FPM -Sealing FPM (-20...+150 °C)	(1)	**C01** - Calibration report	
NBR - Sealing NBR (-30...+100 °C)		**PVC** - Electrical connection with cable gland with PVC cable	
EPD - Sealing EPDM (-30...+150 °C)	(2)	**U68** - Electrical connection with cable gland with PUR cable	(3)

(1) max 300 bar per T.p. > 100°C
(2) max 200 bar
(3) Zero adjustment not available

"HOW TO ORDER" SEQUENCE

Section / Model / Special versions / Range / Process connection / Output signal / Gasket / Options

8	**SMA**	**---**	**41M**	**1**	**FPM C01...U68**
		TA3	**51M**	**4**	
				5	

IN ORDER TO IMPROVE THEIR PRODUCTION, MESSRS. NUOVA FIMA RESERVE THE RIGHT TO THEMSELVES TO MAKE ALL THE MODIFICATIONS THAT THEY DEEM INDISPENSABLE AT ANY TIME. UPDATED DATA-SHEETS ARE AVAILABLE ON SITE: www.nuovafima.com

Copyright © Nuova Fima srl. All rights reserved. Any part of this publication should not be reproduced without a written Nuova Fima's srl approval

NUOVA FIMA USA Inc.
www.nuovafima.com - e-mail: infousa@nuovafima.com
4123 Hollister, Suite G - TX 77080 Houston
TEL. +1 713.690.9800 - FAX +1 713.690.9803

NUOVA FIMA srl
www.nuovafima.com - e-mail: info@nuovafima.com
P.O. BOX 58 - VIA C. BATTISTI 59 - 28045 INVORIO (NO) ITALY
TEL. +39 0322 253200 - FAX +39 0322 253232

ST SA

pressure transmitter for food industry and sanitary applications

PED 2014/68/EU
EMC 2014/30/EU

74-06
Authorization NO. 1599

8.SSA

Ranges: *0…10/0…600 psi, relative* (0...0,6/0…40 bar, relative); *-30"…0/-30"…350 psi, relative* (-1...0/-1…+24 bar, relative); *0…10/0…200 psi, absolute* (0...0,6/0…16 bar, absolute)
Output signals: 4...20 mA, 0...5 Vdc (1), 0...10 Vdc (1).
Non-linearity (BFSL): ≤ ± 0,25 % of the range, according to IEC 61298-2.
Non-repeatability: ≤ 0,1 % of the range, according to IEC 61298-2.
Accuracy: ≤ ± 0,5% of the range (2).
Long term drift: ≤ 0,2 % of span.
Zero and span adjustement: ± 10 % span typical.
Process fluid temperature: *14...+185 °F* (-10...+85 °C); *14...+302 °F* (-10...+150 °C) for high temperature model cod. **8.SSA...TA3**.
Ambient temperature: *14...+185 °F* (-10...+85 °C).
Stocking temperature: *14…+185 °F* (-10...+85 °C)
Response time: <4 ms (measuring); <150 ms (switching on).
Emission and immunity: according to EN 61326, (group 1 - class B; industrial applications).
Vibration resistance: 20g (10...2000 Hz, according to IEC 60068-2-6).
Shock resistance: 40g (6 ms, according to IEC 60068-2-27).
Sensor: piezoresistive for ranges ≤ *23 psi* (1,6 bar); ceramic for ranges > *23 psi* (1,6 bar).
Case: stainless steel, vented for pressure ranges ≤ *230 psi* (≤ 16 bar).
Protection degree: IP 65 as per EN 60529/IEC 529 (3).
Process connection and diaphragm: AISI 316L st.st., with finishing Ra ≤0,8 µm (welded parts included).
Seal fill: oil for food service (FDA).

(1) Available with ceramic sensor only
(2) max measuring error according to IEC 61298-2, including non-linearity and hysteresis (limit-point calibration and reference conditions according to IEC 61298-1).
(3) with properly assembled electric connection

Ranges psi, relative (1)	Overpressure psi, relative	Thermal drift % span / °F (2)
0...10	*36*	*0.03*
0...15	*45*	*0.03*
0...25	*72*	*0.02*
0...30	*72*	*0.02*
0...60	*145*	*0.01*
0...100/0...160	*290*	*0.01*
0...200	*580*	*0.01*
0...300	*580*	*0.01*
0...600	*1450*	*0.01*

(1) Other unit of measurement, intermediate ranges, vacuum and compound ranges are available, as requested by customer.
(2) Thermal drift on connection DIN 11851 DN40F.

Ranges bar, relative (1)	Overpressure bar, relative	Thermal drift % span / °C (2)
0...0,6	2,5	0,05
0...1	3	0,05
0...1,6	5	0,04
0...2,5	5	0,04
0...4	10	0,02
0...6/0...10	20	0,02
0...16	40	0,02
0...25/0...40	100	0,02

(1) Other unit of measurement, intermediate ranges, vacuum and compound ranges are available, as requested by customer.
(2) Thermal drift on connection DIN 11851 DN40F.

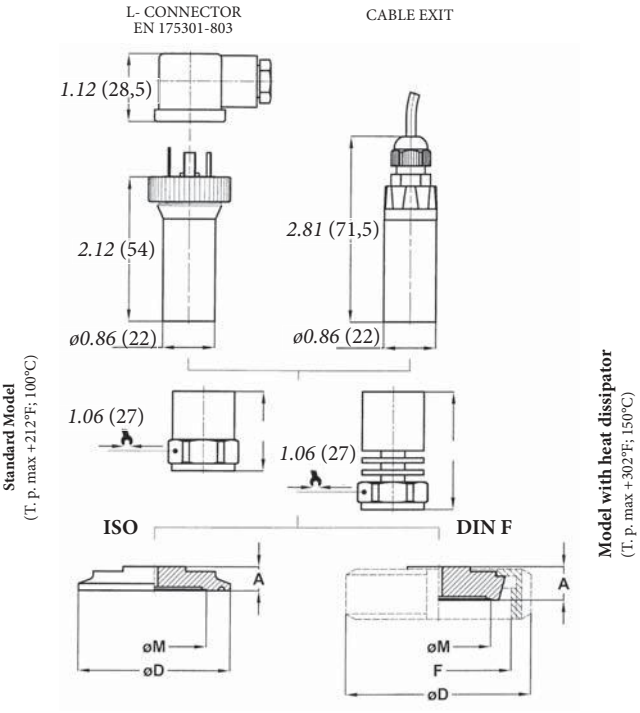

dimensions : *inches* (mm)

Standards	DN	A	øD	øM	F
QHF DIN 11851 F (1) (3)	25	*0.62* (16)	*2.48* (63)	*0.95* (23,5)	Rd 52 x 1/6
SHF DIN 11851 F (1) (3)	40	*0.62* (16)	*3.07* (78)	*1.73* (44)	Rd 65 x 1/6
THF DIN 11851 F (1) (3)	50	*0.66* (17)	*3.62* (92)	*2.24* (57)	Rd 78 x 1/6
AT0 ISO 2852 (clamp) (2)	1" 1/2	*0.39* (10)	*1.98* (50,5)	*1.33* (34)	
BT0 ISO 2852 (clamp) (2)	2"	*0.39* (10)	*2.51* (64)	*1.73* (44)	
DT0 ISO 2852 (clamp) (2)	2" 1/2	*0.39* (10)	*3.05* (77,5)	*2.24* (57)	

dimensions : *inches* (mm)

(1) Execution without roller available on request:
pls. contact our Technical Department.
(2) Execution with clamp, gasket and connection
to be welded available on request: pls. contact our Technical Department.
(3) Gasket System from Siersema Komponenten System (S.K.S.) B.V. or Kieslemann ASEPTO-STAR k-flex gasket.

Pn (bar)	H	Hd
≤ 1,6	*1.42"* (36,2)	*2.05"* (52,2)
> 1,6	*1.23"* (31,2)	*1.86"* (47,2)

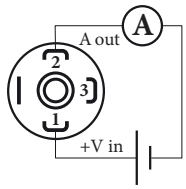

4...20 mA

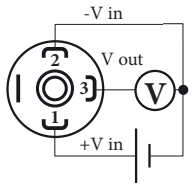

0...5 Vdc
0...10 Vdc

Output signal	4...20 mA 1	0...5 Vdc 4	0...10 Vdc 5
N. of wires	2	3	3
Load (Ohm)	$R_L \leq$ (Vin-8)/0,02	$R_L \geq 5$ KΩ	$R_L \geq 10$ KΩ
Supply: +Vin	10…30	8…30	14…30
Ground	(pls. refer to Installation Manual)		

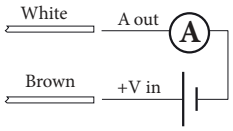

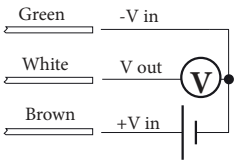

OPTIONS

Model	Standard	With heat dissipator
C01 - Calibration report	◆	◆
PVC - Cable exit, with PVC cable (1)	◆	◆

(1) Zero calibration not available

"HOW TO ORDER" SEQUENCE

Section / Model / Special Version / Range / Process connection / Output signal / Options

8	**SSA**	**---**	**QHF...THF**	**1**	**C01**
		TA3	**BIM**	**4**	**PVC**
			AT0...DT0	**5**	

Copyright © Nuova Fima srl. All rights reserved. Any part of this publication should not be reproduced without a written Nuova Fima's srl approval

NUOVA FIMA USA Inc.
www.nuovafima.com - e-mail: infousa@nuovafima.com
4123 Hollister, Suite G - TX 77080 Houston
TEL. +1 713.690.9800 - FAX +1 713.690.9803

NUOVA FIMA srl
www.nuovafima.com - e-mail: info@nuovafima.com
P.O. BOX 58 - VIA C. BATTISTI 59 - 28045 INVORIO (NO) ITALY
TEL. +39 0322 253200 - FAX +39 0322 253232

RG7- 02/16
IN ORDER TO IMPROVE THEIR PRODUCTION, MESSRS. NUOVA FIMA RESERVE THE RIGHT TO THEMSELVES TO MAKE ALL THE MODIFICATIONS THAT THEY DEEM INDISPENSABLE AT ANY TIME. UPDATED DATA SHEETS ARE AVAILABLE ON SITE: www.nuovafima.com

ST LV

level transmitter

Compliance to requirements of directives:
EMC 2014/30/EU - PED 2014/68/EU - RoHS 2011/65/EU

8.SLV

Measuring ranges: 0...0,1/0...25 bar, relative.
Output signals: 4...20 mA.
Non-linearity (BFSL): ≤ ± 0,175 % of the range, according to IEC 61298-2.
Non-repeatability: ≤ 0,1 % of the range, according to IEC 61298-2.
Accuracy: ≤ ± 0,35% of the range (1).
Thermal drift: between 0 and 60°C, 1% of span; 2,5% of span, max (2).
Long term drift: ≤ 0,2 % of span.
Process fluid temperature: -10...+60 °C.
Stocking temperature: -10...+60 °C.
Response time: <4 ms (measuring); <150 ms (switching on).
Emission and immunity: according to EN 61326,
(group 1 - class B; industrial applications).
Sensor: piezoresistive, silicon oil.
Case: in AISI 316L.
Gasket: VITON (cod. **FPM**).
Electric connection: poliurethane cable, compensated (cod. **I**).
Protection degree: submersible.
Weight: 0,30 kg

(1) max measuring error according to IEC 61298-2, including non-linearity and hysteresis (limit-point calibration and reference conditions according to IEC 61298-1).
(2) + 0,5% of span for measuring range ≤ 0,6 bar

Ranges bar, relative	**Overpressure** bar, relative
0...0,1	0,3
0...0,16	0,5
0...0,25	0,8
0...0,4	1,2
0...0,6	1,8
0...1	2
0...1,6	3,2
0...2,5	5
0...4	8
0...6	12
0...10	20
0...16	25
0...25	25

Other ranges available on demand. Units of measurement available in psi, MPa, kPa too.

ISO 9001 : 2008
Cert. nr. 0433/6

RG6 08/15

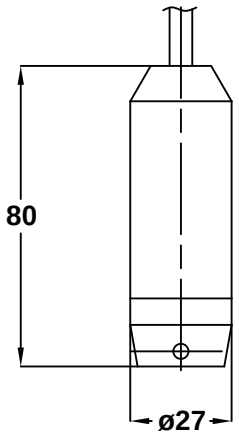

dimensions : *inches* (mm)

Output signal	4...20 mA
N. wires	2
Load (Ohm)	$R_L \leq$ (Vin-8)/0,02
Supply: +Vin	10…30
Massa	(pls. refer to Installation Manual)

4...20 mA

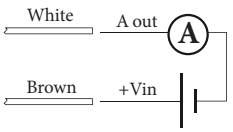

"HOW TO ORDER" SEQUENCE

Section / Model / Range / Output signal / Cable type / Cable length / Gasket

8 SLV 1 I FPM

IN ORDER TO IMPROVE THEIR PRODUCTION, MESSRS. NUOVA FIMA RESERVE THE RIGHT TO THEMSELVES TO MAKE ALL THE MODIFICATIONS THAT THEY DEEM INDISPENSABLE AT ANY TIME. UPDATED DATA-SHEETS ARE AVAILABLE ON SITE: **www.nuovafima.com**

Copyright © Nuova Fima srl. All rights reserved. Any part of this publication should not be reproduced without a written Nuova Fima's srl approval

NUOVA FIMA USA Inc.
www.nuovafima.com - e-mail: infousa@nuovafima.com
4123 Hollister, Suite G - TX 77080 Houston
TEL. +1 713.690.9800 - FAX +1 713.690.9803

NUOVA FIMA srl
www.nuovafima.com - e-mail: info@nuovafima.com
P.O. BOX 58 - VIA C. BATTISTI 59 - 28045 INVORIO (NO) ITALY
TEL. +39 0322 253200 - FAX +39 0322 253232

SX09

intrinsically safe pressure transmitter, ATEX version, accuracy 0,35 %

II 1 GD Ex ia IIC Ex ia IIIC
II 1/2 GD Ex ia IIC Ex ia IIIC

Certificate :
0425 ATEX 2635

8.X09

Ignition protection Ex ia as per EN 60079-0, EN 60079-11, EN 60079-26, atmosphere type GD **:**
- category 1 (1), marking **II 1 GD Ex ia IIC Ex ia IIIC (cod. 1GD)**;
- category 1/2, marking **II 1/2 GD Ex ia IIC Ex ia IIIC (cod. 2GD)**.

Temperature classes (2)**,**
-T6 (T85°C)Ta ≤ 60 °C (cod. T6B);
-T5 (T100°C)Ta ≤ 80 °C (cod. T5B);
-T4 (T135°C)Ta ≤ 100 °C (cod. T4B).

Measuring ranges: 0...1/0...1000 bar, relative; -1...0/-1...+24 bar, relative; 0...1/0..25 bar, absolute.
Output signal: 4...20 mA **(cod. 1)**.
Non-linearity (BFSL): ≤ ± 0,175 % of the range, according to IEC 61298-2.
Non-repeatability: ≤ 0,1 % of the range, according to IEC 61298-2.
Accuracy: ≤ ± 0,35% of the range (3).
Thermal drift: between 0 and 80°C, 1% of span; 2,5% of span, max (4).
Long term drift: ≤ 0,1 % of span.
Zero and span adjustement: ± 10 % span typical.
Stocking temperature: -30...+85 °C.
Response time: <4 ms (measuring); <150 ms (switching on).
Emission and immunity: according to EN 61326,
(group 1 - class B; industrial applications).
Vibration resistance: 20g (10...2000 Hz, according to IEC 60068-2-6).
Shock resistance: 40g (6 ms, according to IEC 60068-2-27).
Sensor: piezoresistive, with silicon oil.
Case: in AISI 316L, vented up to 16 bar.
Protection degree: IP 65 according to IEC 60529 (5).
Process connection: in AISI 316L, hole ø 2,5 mm (with restrictor ø 0,7 mm for measuring ranges ≥ 60 bar).
Weight: 0,25 kg

(1) available with IP 68 metallic cable gland only;
(2) "Tp" : fluid process temperature ≤ "Ta" : ambient temperature; "Tp" & "Ta" ≥ -20 °C.
(3) max measuring error according to IEC 61298-2, including non-linearity and hysteresis (limit-point calibration and reference conditions according to IEC 61298-1); accuracy ≤ ± 0,75% of span for measuring ranges 0...1 bar and 0...600 bar.
(4) + 0,5% of span for measuring range 0,6 bar
(5) with properly assembled electric connection

Ranges bar, relative	**Overpressure** bar, relative
0...0,1	0,3
0...0,16	0,5
0...0,25	0,8
0...0,4	1,2
0...0,6	1,8
0...1	2
0...1,6	3,2
0...2,5	5
0...4	8
0...6	12
0...10	20
0...16	32
0...25	50
0...40	80
0...60	120
0...100	200
0...160	320
0...250	380
0...400	600
0...600	900
0...1000	1500

Other ranges available on demand. Units of measurement available in psi, MPa, kPa too.

Compliance to requirements of directives: ATEX 94/9/EC - EMC 2004/108/EC - PED 97/23/EC - RoHS 2011/65/EC
ISO 9001 : 2008
Cert. nr. 0433/6

intrinsically safe pressure transmitter, ATEX version, accuracy 0,35 %

SX 09

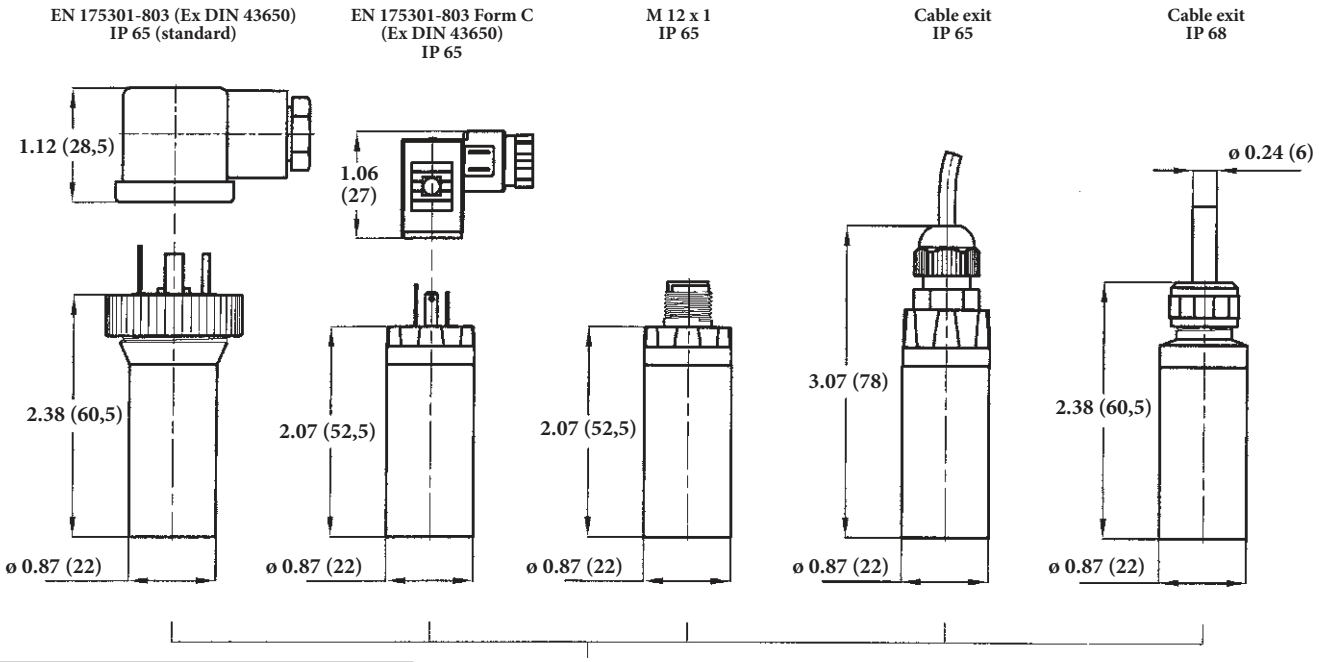

Electrical features	
N. of wires	2
Load (Ohm)	$R_L \leq ((Ui-10)/0,02)$
Supply (Ui)	10…30 Vdc
Max current (Ii)	≤ 100 mA
Max power (Pi)	1,0 W
Capacitance (Ci)	19 nF
Inductivity (Li)	0 mH

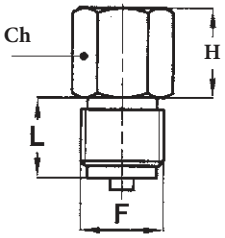

Pn (bar)	H	Ch
≤ 100	*1.08"* (27,5)	*0.87"* (22)
> 100	*1.24"* (31,5)	*0.94"* (24)

F	L
41M - G 1/2 A **43M** - 1/2-14 NPT	*0.78"* (20)
21M - G 1/4 A **23M** - 1/4-18 NPT	*0.51"* (13)

dimensions : inches (mm)

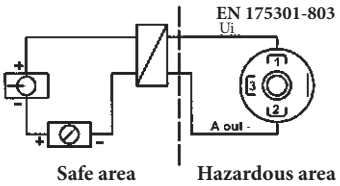

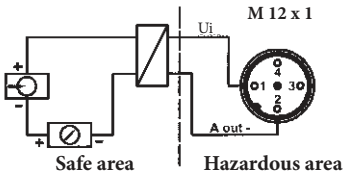

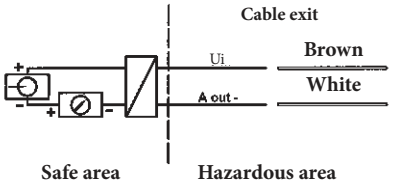

OPTIONS

Classification		II 1GD	II 1/2GD
--- -	Junction box IP 65, as per EN 175301-803 Form A		T6...T4 (2)
SCC -	Junction box IP 65, as per EN 175301-803 Form C (1)		T6...T4 (2)
M12 -	Junction box IP 65, M12 x 1 (1)		T6...T5
PVC -	Cable exit IP 65, with PVC cable (1)		T6...T5
U68 -	Cable exit IP 68, with vented polyurethane cable (1)	T6	T6
CRP -	CR gasket	T6...T5	T6...T5
EPD -	EPDM gasket	T6...T4	T6...T4
NBR -	NBR gasket	T6...T5	T6...T5
FPM -	VITON gasket	T6...T4	T6...T4

(1) Zero calibration not available

(2) silicon gasket when T4 temp. class is choose

LOAD RESISTANCE

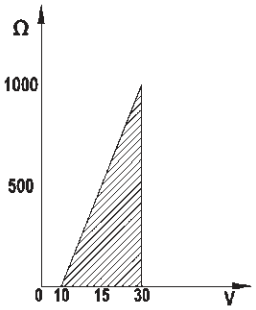

"HOW TO ORDER" SEQUENCE

Section / Model / Range / Process connection / Output signal / Classification / Temperature / Gasket / Options

Section	Model	Range	Process connection	Output signal	Classification	Temperature	Gasket	Options
8	X09	41M	1	1GD	T6B	CRP	- - - ... U68	
		43M		2GD	T5B	EPD		
					T4B	NBR		
						FPM		

IN ORDER TO IMPROVE THEIR PRODUCTION, MESSRS. NUOVA FIMA RESERVE THE RIGHT TO THEMSELVES TO MAKE ALL THE MODIFICATIONS THAT THEY DEEM INDISPENSABLE AT ANY TIME. UPDATED DATA-SHEETS ARE AVAILABLE ON SITE **www.nuovafima.com**

Copyright © Nuova Fima S.r.l. All rights reserved. Any part of this publication should not be reproduced without a written Nuova Fima's S.r.l. approval

NUOVA FIMA USA Inc.
www.nuovafima.com - e-mail: infousa@nuovafima.com
4123 Hollister, Suite G - TX 77080 Houston
TEL. +1 713.690.9800 - FAX +1 713.690.9803

NUOVA FIMA srl
www.nuovafima.com - e-mail: info@nuovafima.com
P.O. BOX 58 - VIA C. BATTISTI 59 - 28045 INVORIO (NO) ITALY
TEL. +39 0322 253200 - FAX +39 0322 253232

SX18

intrinsically safe pressure transmitter, ATEX version, accuracy 0,5 %

II 1 GD Ex ia IIC Ex ia IIIC
II 1/2 GD Ex ia IIC Ex ia IIIC

Certificate : 0425 ATEX 2635

8.X18

Ignition protection Ex ia as per EN 60079-0, EN 60079-11, EN 60079-26, atmosphere type GD **:**
- category 1 [(1)], marking **II 1 GD Ex ia IIC Ex ia IIIC (cod. 1GD)**;
- category 1/2, marking **II 1/2 GD Ex ia IIC Ex ia IIIC (cod. 2GD)**.

Temperature classes [(2)]**,**
-T6 (T85°C)Ta ≤ 60 °C (cod. T6B);
-T5 (T100°C)Ta ≤ 80 °C (cod. T5B);
-T4 (T135°C)Ta ≤ 100 °C (cod. T4B).

Measuring ranges: 0...1/0...600 bar, relative; -1...0/-1...+24 bar, relative; 0...1/0..25 bar, absolute.
Output signal: 4...20 mA **(cod. 1)**.
Non-linearity (BFSL): ≤ ± 0,25 % of the range, according to IEC 61298-2.
Non-repeatability: ≤ 0,1 % of the range, according to IEC 61298-2.
Accuracy: ≤ ± 0,5% of the range [(3)].
Thermal drift: between 0 and 80°C, 1% of span; 2,5% of span, max [(4)].
Long term drift: ≤ 0,1 % of span.
Zero and span adjustement: ± 10 % span typical.
Stocking temperature: -30...+85 °C.
Response time: <4 ms (measuring); <150 ms (switching on).
Emission and immunity: according to EN 61326,
(group 1 - class B; industrial applications).
Vibration resistance: 20g (10...2000 Hz, according to IEC 60068-2-6).
Shock resistance: 40g (6 ms, according to IEC 60068-2-27).
Sensor: ceramic in Al_2O_3.
Case: in AISI 316L, vented up to 16 bar.
Protection degree: IP 65 according to IEC 60529 [(5)].
Process connection: in AISI 316L, hole ø 2,5 mm (with restrictor ø 0,7 mm for measuring ranges ≥ 60 bar).
Weight: 0,20 kg

(1) available with IP 68 metallic cable gland only;
(2) "Tp" : fluid process temperature ≤ "Ta" : ambient temperature; "Tp" & "Ta" ≥ -20 °C.
(3) max measuring error according to IEC 61298-2, including non-linearity and hysteresis (limit-point calibration and reference conditions according to IEC 61298-1); accuracy ≤ ± 0,75% of span for measuring ranges 0...1 bar and 0...600 bar.
(4) + 0,5% of span for measuring range 1 bar
(5) with properly assembled electric connection

Ranges bar, relative	**Overpressure** bar, relative
0...1	5
0...1,6	5
0...2,5	5
0...4	8
0...6	12
0...10	20
0...16	32
0...25	50
0...40	80
0...60	120
0...100	200
0...160	320
0...250	500
0...400	600
0...600	800

Other ranges available on demand. Units of measurement available in psi, MPa, kPa too.

Compliance to requirements of directives: ATEX 94/9/EC - EMC 2004/108/EC - PED 97/23/EC - RoHS 2011/65/EC

ISO 9001 : 2008
Cert. nr. 0433/6

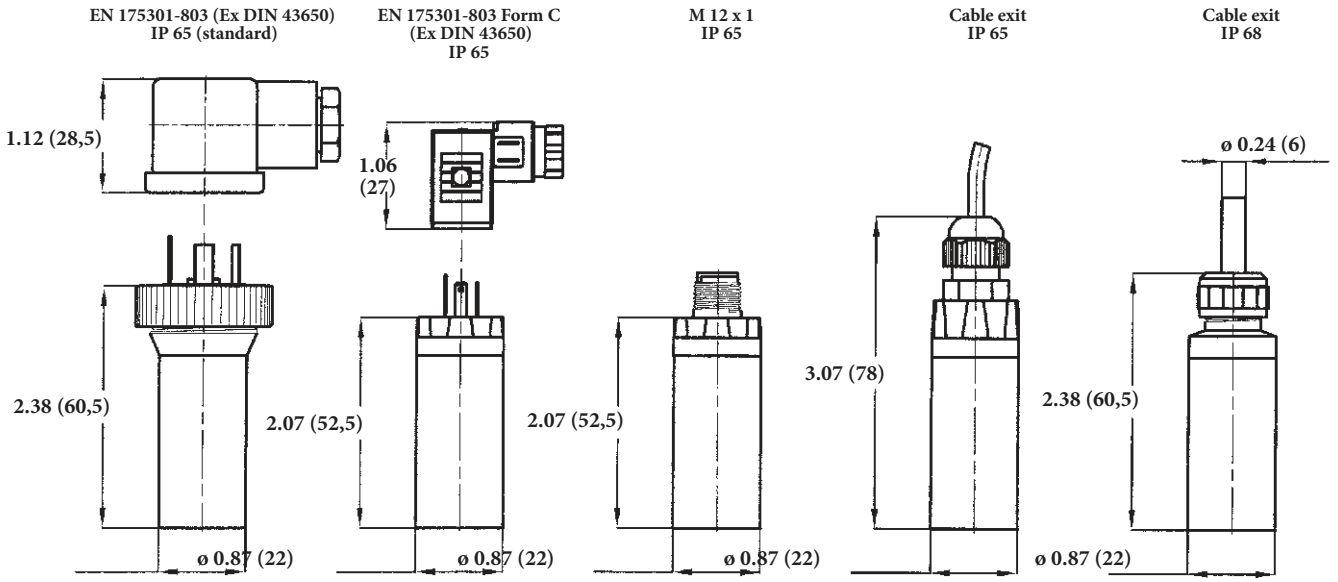

Electrical features	
N. of wires	2
Load (Ohm)	$R_L \leq$ (Vin-10)/0,02
Supply: (Ui)	10…30 Vdc
Max current (Ii)	≤ 100 mA
Max power (Pi)	1,0 W
Capacitance (Ci)	19 nF
Inductivity (Li)	0 mH

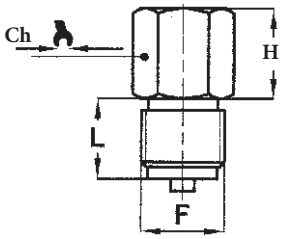

Pn (бар)	H	Ch
1...4	*1.06"* (27)	*0.87"* (22)
6...400	*0.89"* (22,5)	*0.87"* (22)
> 400	*0.89"* (22,5)	*0.94"* (24)

F	L
41M - G 1/2 A **43M** - 1/2-14 NPT	*0.78"* (20)
21M - G 1/4 A **23M** - 1/4-18 NPT	*0.51"* (13)

dimensions : inches (mm)

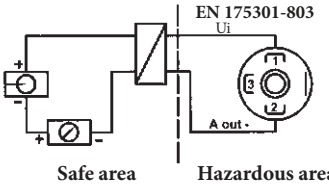

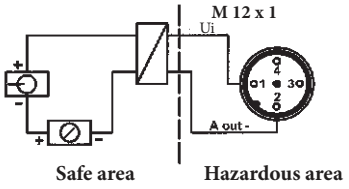

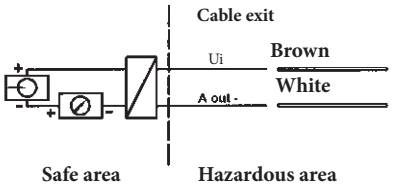

OPTIONS

Classification		II 1GD	II 1/2GD
--- -	Junction box IP 65, as per EN 175301-803 Form A		T6...T4 (2)
SCC -	Junction box IP 65, as per EN 175301-803 Form C (1)		T6...T4 (2)
M12 -	Junction box IP 65, M12 x 1 (1)		T6...T5
PVC -	Cable exit IP 65, with PVC cable (1)		T6...T5
U68 -	Cable exit IP 68, with vented polyurethane cable (1)	T6	T6
CRP -	CR gasket	T6...T5	T6...T5
EPD -	EPDM gasket	T6...T4	T6...T4
NBR -	NBR gasket	T6...T5	T6...T5
FPM -	VITON gasket	T6...T4	T6...T4

(1) Zero calibration not available

(2) silicone is the only available gasket for T4 class

LOAD RESISTANCE

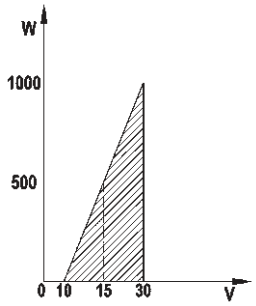

"HOW TO ORDER" SEQUENCE

Section / Model / Range / Process connection / Output signal / Classification / Temperature / Gasket / Options

8	**X18**	**41M**	**1**	**1GD**	**T6B**	**CRP**	**- - - ... U68**
		43M		**2GD**	**T5B**	**EPD**	
		21M			**T4B**	**NBR**	
		23M				**FPM**	

Copyright © Nuova Fima S.p.A. All rights reserved. Any part of this publication should not be reproduced without a written Nuova Fima's S.p.A. approval

NUOVA FIMA USA Inc.
www.nuovafima.com - e-mail: infousa@nuovafima.com
4123 Hollister, Suite G - TX 77080 Houston
TEL. +1 713.690.9800 - FAX +1 713.690.9803

NUOVA FIMA srl
www.nuovafima.com - e-mail: info@nuovafima.com
P.O. BOX 58 - VIA C. BATTISTI 59 - 28045 INVORIO (NO) ITALY
TEL. +39 0322 253200 - FAX +39 0322 253232

RC7- 10/15

IN ORDER TO IMPROVE THEIR PRODUCTION, MESSRS. NUOVA FIMA RESERVE THE RIGHT TO THEMSELVES TO MAKE ALL THE MODIFICATIONS THAT THEY DEEM INDISPENSABLE AT ANY TIME. UPDATED DATA-SHEETS ARE AVAILABLE ON SITE: www.nuovafima.com

SX MA

flush diaphragm pressure transmitter, intrinsecally safe ATEX version, accuracy 0,5 %

II 1 GD Ex ia IIC Ex ia IIIC
II 1/2 GD Ex ia IIC Ex ia IIIC

Certificato :
0425 ATEX 2635

8.XMA

Ignition protection Ex ia as per EN 60079-0, EN 60079-11, EN 60079-26, atmosphere type GD **:**
- category 1 [1], marking **II 1 GD Ex ia IIC Ex ia IIIC (cod. 1GD)**;
- category 1/2, marking **II 1/2 GD Ex ia IIC Ex ia IIIC (cod. 2GD)**.

Temperature classes [2]**,**
-T6 (T85°C)Ta ≤ 60 °C (cod. T6B);
-T5 (T100°C)Ta ≤ 80 °C (cod. T5B);
-T4 (T135°C)Ta ≤ 100 °C (cod. T4B).

Measuring ranges: 0...1/0...600 bar, relative.
Output signal: 4...20 mA **(cod. 1)**.
Non-linearity (BFSL): ≤ ± 0,25 % of the range, according to IEC 61298-2.
Non-repeatability: ≤ 0,15 % of the range, according to IEC 61298-2.
Accuracy: ≤ ± 0,5% of the range [3].
Long term drift: ≤ 0,2 % of span.
Zero and span adjustement: ± 10 % span typical.
Stocking temperature: -30...+85 °C.
Response time: <4 ms (measuring); <150 ms (switching on).
Emission and immunity: according to EN 61326,
(group 1 - class B; industrial applications).
Vibration resistance: 20g (10...2000 Hz, according to IEC 60068-2-6).
Shock resistance: 40g (6 ms, according to IEC 60068-2-27).
Sensor: ceramic in Al_2O_3.
Case: in AISI 316L, vented up to 16 bar.
Protection degree: IP 65 according to IEC 60529 [4].
Diaphragm and process connection: in AISI 316L.
Weight: 0,28 kg

(1) available with IP 68 metallic cable gland only;
(2) "Tp" : fluid process temperature ≤ "Ta" : ambient temperature;
"Tp" & "Ta" ≥ -30 °C.
(3) max measuring error according to IEC 61298-2, including non-linearity and hysteresis (limit-point calibration and reference conditions according to IEC 61298-1);
accuracy ≤ ± 0,75% of span for measuring ranges 0...1 bar and 0...600 bar.
(4) with properly assembled electric connection

Ranges bar, relative (1)	Thermal drift % span / °C (3)	Overpressure bar, relative
0...1 (2)	0,08	2,5
0...1,6/0...2,5 (2)	0,06	5
0...4 (2)	0,04	10
0...6 (2)	0,03	20
0...10	0,03	20
0...16	0,02	40
0...25/0...40	0,02	100
0...60/0...100	0,02	200
0...160/0...250	0,02	500
0...400	0,02	600
0...600	0,02	800

(1) Other unit of measurement and intermediate ranges are available, as requested by customer.
(2) Ranges available with G 3/4 A connection only.
(3) Thermal drift on connection G 3/4 A.

Compliance to requirements of directives: ATEX 94/9/EC - EMC 2004/108/EC - PED 97/23/EC - RoHS 2011/65/EC

ISO 9001 : 2008
Cert. nr. 0433/6

flush diaphragm pressure transmitter, intrinsecally safe ATEX version, accuracy 0,5 %

SX MA

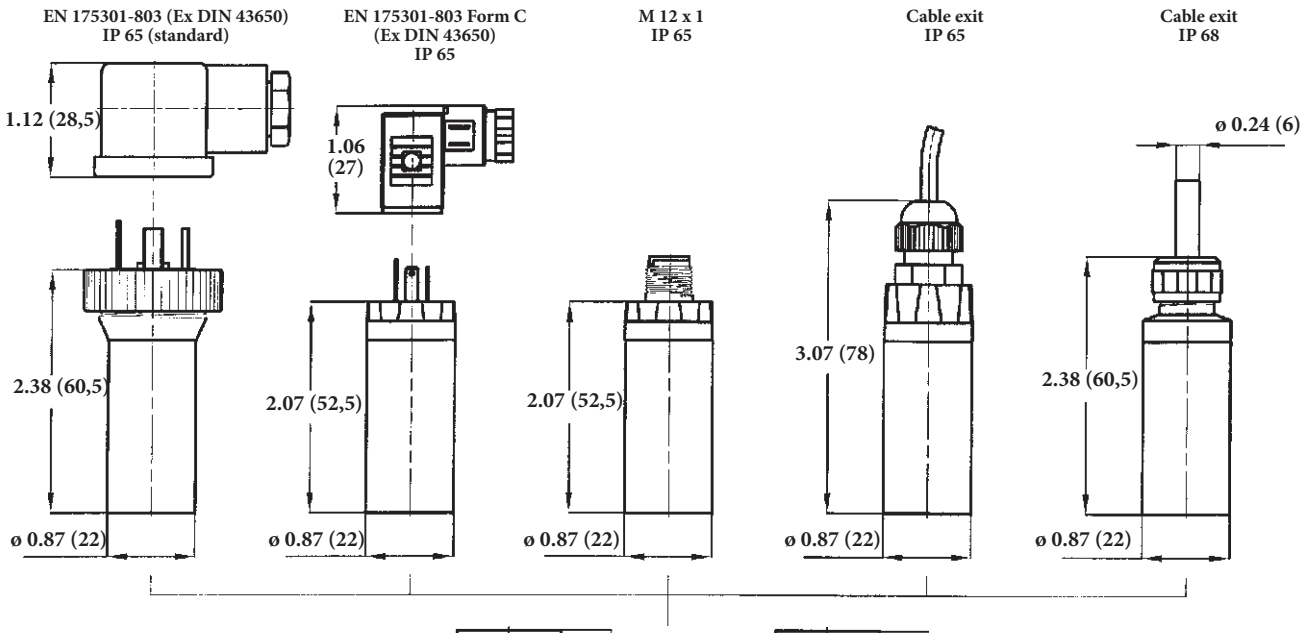

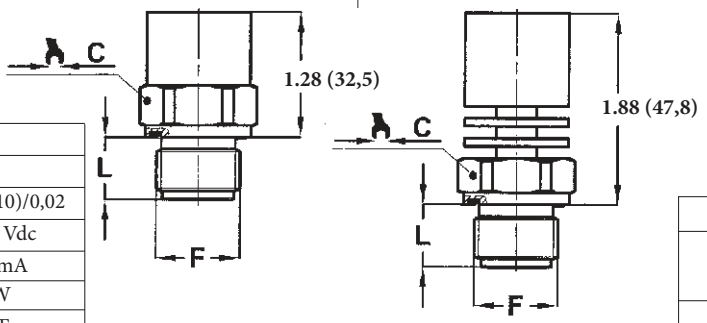

Standard Model

Model with heat dissipator

Electrical features	
N. of wires	2
Load (Ohm)	$R_L \leq (Ui-10)/0,02$
Supply (Ui)	10…30 Vdc
Max current (Ii)	≤ 100 mA
Max power (Pi)	1,0 W
Capacitance (Ci)	19 nF
Inductivity (Li)	0 mH

F	L	C
41M G 1/2 B	*0.62* (16)	*1.06* (27)
51M G 3/4 B	*0.64* (16,5)	*1.25* (32)

dimensions : inches (mm)

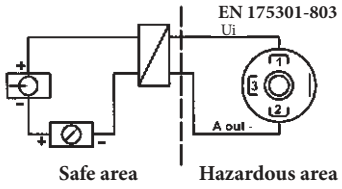

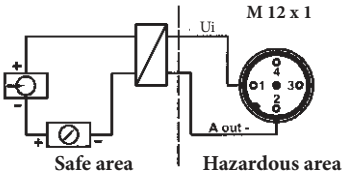

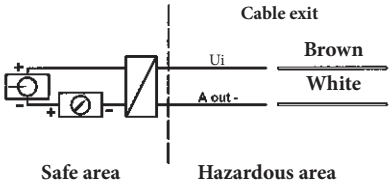

OPTIONS

Classification		II 1GD	II 1/2GD
--- -	Junction box IP 65, as per EN 175301-803 Form A		T6...T4 (2)
SCC -	Junction box IP 65, as per EN 175301-803 Form C (1)		T6...T4 (2)
M12 -	Junction box IP 65, M12 x 1 (1)		T6...T5
PVC -	Cable exit IP 65, with PVC cable (1)		T6...T5
U68 -	Cable exit IP 68, with vented polyurethane cable (1)	T6	T6

(1) Zero calibration not available
(2) silicon gasket when T4 temp. class is choose

LOAD RESISTANCE

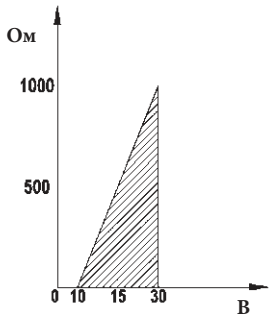

"HOW TO ORDER" SEQUENCE

Section / Model / Range / Process connection / Output signal / Classification / Temperature / Gasket / Options

Section	Model	Range	Process connection	Output signal	Classification	Temperature	Gasket	Options
8	XMA	41M	1	1GD	T6B	FPM	- - - ... U68	
		51M		2GD	T5B			
					T4B			

Copyright © Nuova Fima S.r.l. All rights reserved. Any part of this publication should not be reproduced without a written Nuova Fima's S.r.l. approval

IN ORDER TO IMPROVE THEIR PRODUCTION, MESSRS. NUOVA FIMA RESERVE THE RIGHT TO THEMSELVES TO MAKE ALL THE MODIFICATIONS THAT THEY DEEM INDISPENSABLE AT ANY TIME. UPDATED DATA-SHEETS ARE AVAILABLE ON SITE: www.nuovafima.com

NUOVA FIMA USA Inc.
www.nuovafima.com - e-mail: infousa@nuovafima.com
4123 Hollister, Suite G - TX 77080 Houston
TEL. +1 713.690.9800 - FAX +1 713.690.9803

NUOVA FIMA srl
www.nuovafima.com - e-mail: info@nuovafima.com
P.O. BOX 58 - VIA C. BATTISTI 59 - 28045 INVORIO (NO) ITALY
TEL. +39 0322 253200 - FAX +39 0322 253232

SX SA

intrinsically safe pressure transmitter, for food industry and sanitary applications, ATEX version, accuracy 0,5 %

74-06
Authorization NO. 1599

II 1 GD Ex ia IIC Ex ia IIIC
II 1/2 GD Ex ia IIC Ex ia IIIC

Certificate :
CESI 06 ATEX 003 X

Compliance to requirements of directives: ATEX 94/9/EC - EMC 2004/108/EC - PED 97/23/EC - RoHS 2011/65/EC

8.XSA

Ignition protection Ex ia as per EN 60079-0, EN 60079-11, EN 60079-26, atmosphere type GD **:**
- category 1 [1], marking **II 1 GD Ex ia IIC Ex ia IIIC (cod. 1GD)**;
- category 1/2, marking **II 1/2 GD Ex ia IIC Ex ia IIIC (cod. 2GD)**.

Temperature classes [2],
-T6 (T85°C)Ta ≤ 60 °C (cod. T6B);
-T5 (T100°C)Ta ≤ 80 °C (cod. T5B);
-T4 (T135°C)Ta ≤ 100 °C (cod. T4B).

Measuring ranges: 0...0,6/0...40 bar, relative; -1...0/-1...+24 bar, relative; 0...0,6/0…16 bar, absolute.

Output signal: 4...20 mA **(cod. 1)**.

Non-linearity (BFSL): ≤ ± 0,25 % of the range, according to IEC 61298-2.

Non-repeatability: ≤ 0,15 % of the range, according to IEC 61298-2.

Accuracy: ≤ ± 0,5% of the range [3].

Long term drift: ≤ 0,2 % of span.

Zero and span adjustement: ± 10 % span typical.

Stocking temperature: -10...+85 °C.

Response time: <4 ms (measuring); <150 ms (switching on).

Emission and immunity: according to EN 61326, (group 1 - class B; industrial applications).

Vibration resistance: 20g (10...2000 Hz, according to IEC 60068-2-6).

Shock resistance: 40g (6 ms, according to IEC 60068-2-27).

Sensor: ceramic in Al_2O_3 or piezoresistive.

Seal fill: oil for food service (FDA).

Case: in AISI 316L, vented up to 16 bar.

Protection degree: IP 65 according to IEC 60529 [4].

Diaphragm and process connection: in AISI 316L.

(1) available with IP 68 metallic cable gland only;
(2) "Tp" : fluid process temperature ≤ "Ta" : ambient temperature; "Tp" & "Ta" ≥ -20 °C.
(3) max measuring error according to IEC 61298-2, including non-linearity and hysteresis (limit-point calibration and reference conditions according to IEC 61298-1); accuracy ≤ ± 0,75% of span for measuring range 0...1 bar
(4) with properly assembled electric connection

Ranges bar, relative (1)	**Overpressure** bar, relative	**Thermal drift % span / °C** (2)
0...≥ 0,6/0...< 1	2,5	0,05/0,04
0...1/0...2,5	5	0,04/0,03
0...4	10	0,02
0...6/0...10	20	0,02
0...16	40	0,02
0...25/0...40	60	0,02

(1) Other unit of measurement, intermediate ranges, vacuum and compound ranges are available, as requested by customer.
(2) Thermal drift on connection DIN 11851 DN40F.

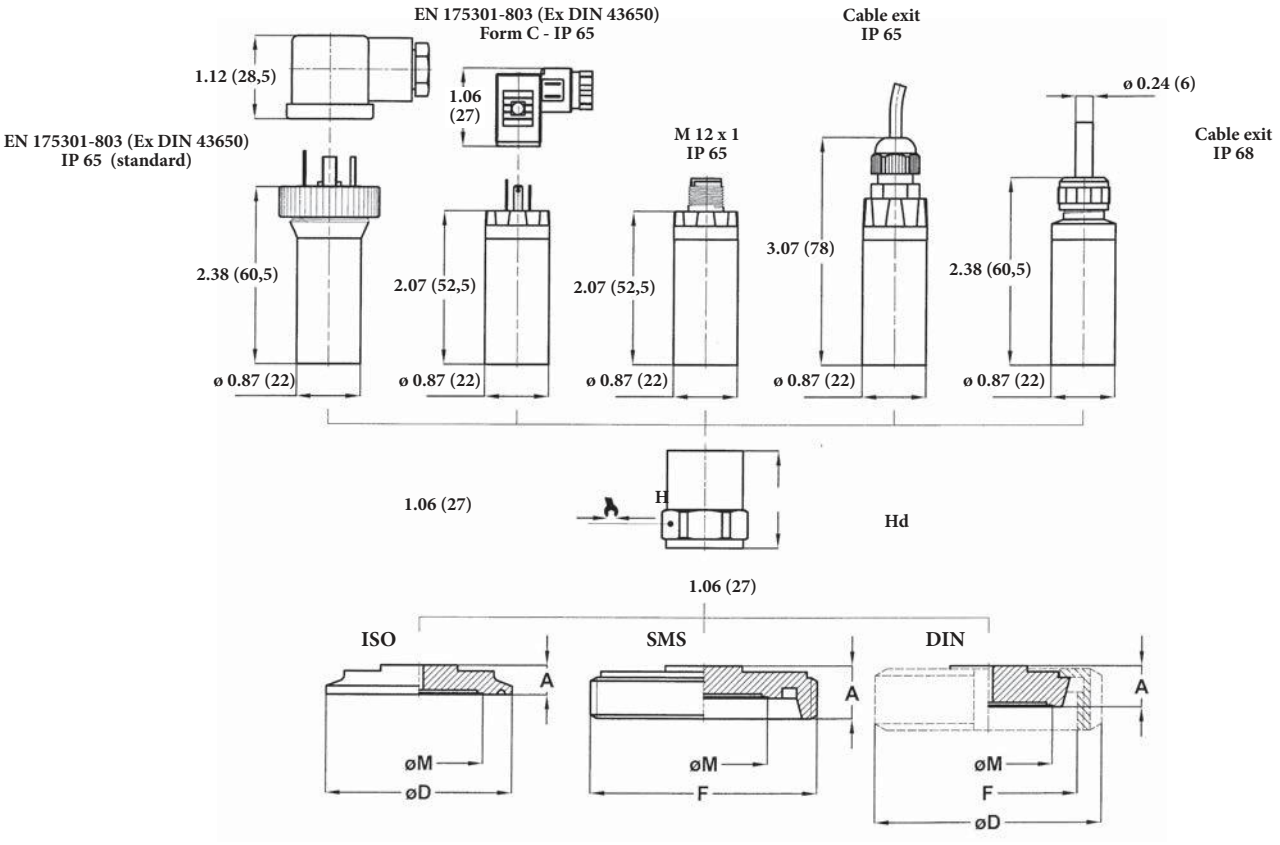

Pn (бар)	H	Hd
≤ 1,6	*1.42”* (36,2)	*2.05”* (52,2)
> 1,6	*1.23”* (31,2)	*1.86”* (47,2)

Standards	DN	A	øD	øM	F
BIM SMS M (4)	2"	*0.74* (19)		*1.73* (44)	Rd 70 x 1/6
AT0 ISO 2852 (clamp) (2)	1" 1/2	*0.39* (10)	*1.98* (50,5)	*1.33* (34)	
BT0 ISO 2852 (clamp) (2)	2"	*0.39* (10)	*2.51* (64)	*1.73* (44)	
DT0 ISO 2852 (clamp) (2)	2" 1/2	*0.39* (10)	*3.05* (77,5)	*2.24* (57)	

Standards	DN	A	øD	øM	F
QHF DIN 11851 F (1) (3)	25	*0.62* (16)	*2.48* (63)	*0.95* (23,5)	Rd 52 x 1/6
SHF DIN 11851 F (1) (3)	40	*0.62* (16)	*3.07* (78)	*1.73* (44)	Rd 65 x 1/6
THF DIN 11851 F (1) (3)	50	*0.66* (17)	*3.62* (92)	*2.24* (57)	Rd 78 x 1/6

dimensions : *inches* (mm)

(1) Execution without roller available on request: pls. contact our Technical Department.
(2) Execution with clamp, gasket and connection to be welded available on request: pls. contact our Technical Department.
(3) Gasket System from Siersema Komponenten System (S.K.S.) B.V. or Kieslemann ASEPTO-STAR k-flex gasket.
(4) Not available with 3A marking

Electrical features	
N. of wires	2
Load (Ohm)	$R_L \leq (Ui-10)/0,02$
Supply (Ui)	10…30
Max current (Ii)	≤ 100 mA
Max power (Pi)	1,0 W
Capacitance (Ci)	19 nF
Inductivity (Li)	0 mH

LOAD RESISTANCE

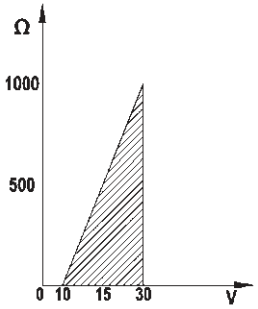

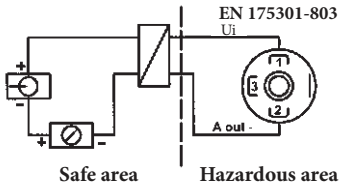

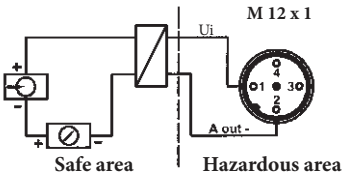

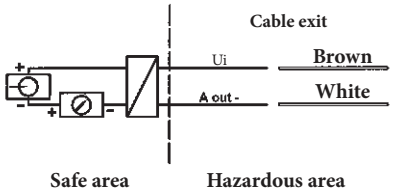

OPTIONS

Classification		II 1GD	II 1/2GD
--- -	Junction box IP 65, as per EN 175301-803 Form A		T6...T4 (2)
SCC -	Junction box IP 65, as per EN 175301-803 Form C (1)		T6...T4 (2)
M12 -	Junction box IP 65, M12 x 1 (1)		T6...T5
PVC -	Cable exit IP 65, with PVC cable (1)		T6...T5
U68 -	Cable exit IP 68, with vented polyurethane cable (1)	T6	T6

(1) Zero calibration not available
(2) silicon gasket when T4 temp. class is choose

"HOW TO ORDER" SEQUENCE

Section / Model / Range / Process connection / Output signal / Classification / Temperature / Options

8	XSA	BIM...DT0	1	1GD	T6B	- - - ... U68
		QHF...THF		2GD	T5B	
					T4B	

IN ORDER TO IMPROVE THEIR PRODUCTION, MESSRS. NUOVA FIMA RESERVE THE RIGHT TO THEMSELVES TO MAKE ALL THE MODIFICATIONS THAT THEY DEEM INDISPENSABLE AT ANY TIME. UPDATED DATA-SHEETS ARE AVAILABLE ON SITE: www.nuovafima.com

Copyright © Nuova Fima S.r.l. All rights reserved. Any part of this publication should not be reproduced without a written Nuova Fima's S.r.l. approval

NUOVA FIMA USA Inc.
www.nuovafima.com - e-mail: infousa@nuovafima.com
4123 Hollister, Suite G - TX 77080 Houston
TEL. +1 713.690.9800 - FAX +1 713.690.9803

NUOVA FIMA srl
www.nuovafima.com - e-mail: info@nuovafima.com
P.O. BOX 58 - VIA C. BATTISTI 59 - 28045 INVORIO (NO) ITALY
TEL. +39 0322 253200 - FAX +39 0322 253232

SX LV

intrinsically safe level transmitter, ATEX version, accuracy 0,5 %

II 1 G Ex ia IIC Ex ia IIIC

Certificate : 0425 ATEX 2635

8.XLV

Ignition protection Ex ia as per EN 60079-0, EN 60079-11, EN 60079-26, atmosphere type G **:**
- category 1, marking **II 1 GD Ex ia IIC Ex ia IIIC (cod. 1GD)**;
Temperature classes (1),
-T6 (T85°C)Ta ≤ 60 °C (cod. T6B).
Measuring ranges: 0...1/0...25 bar, relative.
Output signal: 4...20 mA **(cod. 1)**.
Non-linearity (BFSL): ≤ ± 0,25 % of the range, according to IEC 61298-2.
Non-repeatability: ≤ 0,15 % of the range, according to IEC 61298-2.
Accuracy: ≤ ± 0,5% of the range (2).
Thermal drift: between 0 and 80°C, 1% of span; 2,5% of span, max.
Long term drift: ≤ 0,2 % of span.
Stocking temperature: -10...+60 °C.
Response time: <4 ms (measuring); <150 ms (switching on).
Emission and immunity: according to EN 61326,
(group 1 - class B; industrial applications).
Vibration resistance: 20g (10...2000 Hz, according to IEC 60068-2-6).
Shock resistance: 40g (6 ms, according to IEC 60068-2-27).
Sensor: piezoresistive cell for pressure ranges < 1 bar;
ceramic cell for pressure ranges ≥ 1 bar.
Filling fluid of piezoresistive cell: silicone oil.
Case: in AISI 316L, vented up to 16 bar.
Sensor gasket: VITON (**Cod. FPM**).
Electric connection: poliurethane cable, compensated.
Protection: submersible.
Weight:
for pressure ranges 1 bar = 0,28 kg;
for pressure ranges ≥ 0,6 bar = 0,22 kg.

(1) "Tp" : fluid process temperature ≤ "Ta" : ambient temperature;
"Tp" & "Ta" ≥ -20 °C.
(2) max measuring error according to IEC 61298-2, including non-linearity and hysteresis (limit-point calibration and reference conditions according to IEC 61298-1)

Ranges relative (1)
0...0,1/0...≤ 0,6
0...> 0,6/0...< 1
0...1/0...2,5
0...4
0...6/0...10
0...16
0...25

(1) Other unit of measurement and intermediate ranges, are available, as requested by customer.

Compliance to requirements of directives: ATEX 94/9/EC - EMC 2004/108/EC - PED 97/23/EC - RoHS 2011/65/EC

ISO 9001 : 2008
Cert. nr. 0433/6

RG3 - 10/15

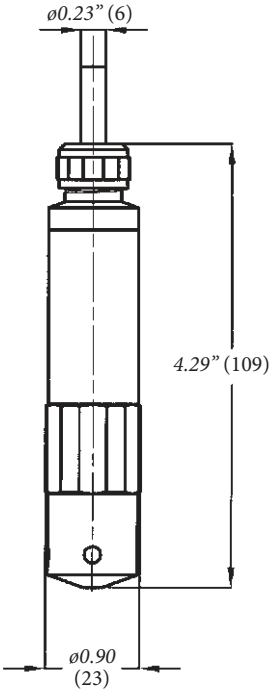

dimensions : *inches* (mm)

Load Resistance

Electrical features	
N. of wires	2
Load (Ohm)	$R_L \leq (Ui-10)/0,02$
Supply (Ui)	10…30 Vdc
Max current (Ii)	≤ 100 mA
Max power (Pi)	1,0 W
Capacitance (Ci)	19 nF
Inductivity (Li)	0 mH

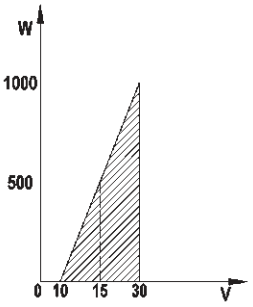

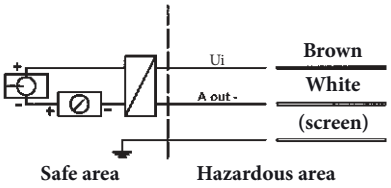

"HOW TO ORDER" SEQUENCE

Section	Model	Range	Output signal	Classification	Temperature	Cable type	Gasket
8	XLV	1		1GD	T6B	I	FPM

Copyright © Nuova Fima S.r.l. All rights reserved. Any part of this publication should not be reproduced without a written Nuova Fima's S.r.l. approval

IN ORDER TO IMPROVE THEIR PRODUCTION, MESSRS. NUOVA FIMA RESERVE THE RIGHT TO THEMSELVES TO MAKE ALL THE MODIFICATIONS THAT THEY DEEM INDISPENSABLE AT ANY TIME. UPDATED DATA-SHEETS ARE AVAILABLE ON SITE: **www.nuovafima.com**

NUOVA FIMA USA Inc.
www.nuovafima.com - e-mail: infousa@nuovafima.com
4123 Hollister, Suite G - TX 77080 Houston
TEL. +1 713.690.9800 - FAX +1 713.690.9803

NUOVA FIMA srl
www.nuovafima.com - e-mail: info@nuovafima.com
P.O. BOX 58 - VIA C. BATTISTI 59 - 28045 INVORIO (NO) ITALY
TEL. +39 0322 253200 - FAX +39 0322 253232

SDM 18

multifunction digital pressure instrument: gauge, transmitter, switch

Compliance to requirements of directives:
EMC 2014/30/EU - PED 2014/68/EU - RoHS 2011/65/EU

8.D18 - Standard Model

Display output: 5 digit x *0.47"* (12 mm) height, with analog bar graph.
Display type: graphic with resolution 128 x 64 dots, backlighted.
Output signal: 4...20 mA (cod. **A**), with separated supply (3 wires).
Rangeability (on signal output)**:**
1:5 for pressure ranges ≤ *6000 psi* (400bar);
1:2 for pressure ranges > *6000 psi* (400bar).
Accuracy (% FSV):
for rangeability 1:1 =
≤ 0,1 for pressure ranges ≤ *6000 psi* (400bar);
≤ 0,25 for pressure ranges > *6000 psi* (400bar);
for rangeability ≠ 1:1,
standard accuracy x (nominal range/calibrated range).
Alarm contacts: nr.2, PNP or NPN.
Calibration: limit-point as per DIN 16086.
Process fluid temperature: -4...+176 °F (-20...+80 °C).
Compensated temperature range: +32…+176 °F; (0...+80 °C).
Ambient temperature: -4...+158 °F (-20...+70 °C).
Supply and max load: see on page 2.
Additional displayed informations: alarms state, minimum or maximum peak value, minimum or maximum ambient temperature, current value of signal output, system alarms.
Safety designation: S1 as per EN 837-2.
Keyboard: polyester.
Sensor: piezoresistive for pressure ranges ≤ *6000 psi* (400bar);
st.st. thin film for pressure ranges > *6000 psi* (400bar).
Electric connection: junction box as per VDE with exit for cables *ø 0.27"...0.51"* (ø 7...13 mm).
Response time: 0,1 s.
Adsorbed current: ≤ 100 mA + alarms current.
Protection degree: IP 65 as per EN 60529/IEC 529.
Socket material: AISI 316L st.st.
Case: stainless steel, vented for pressure ranges ≤ *1450 psi* (100bar).
Ring: stainless steel, crimped.
Weight: 0,52 kg.

Nominal Ranges *in Hg...psi, relative* (bar, relative)	**Minimum Range** *psi, relative* (bar, relative)	**Overpressure** *psi, relative* (bar, relative)
-3...6 **(-0,1...0,4)**	*1.45* (0,1)	*11.6* (0,8)
-12...23 **(-0,4...1,6)**	*5.8* (0,4)	*46.4* (3,2)
-30...85 **(-1...6)**	*20.3* (1,4)	*174* (12)
-30...230 **(-1...16)**	*49.3* (3,4)	*464* (32)
-30...580 **(-1...40)**	*119* (8,2)	*1160* (80)
-30...1450 **(-1...100)**	*293* (20,2)	*2900* (200)
-30...3600 **(-1...250)**	*728* (50,2)	*5400* (375)
-30...5800 **(-1...400)**	*1163* (80,2)	*8700* (600)
0...14500 **(0...1000)**	*7250* (500)	*15950* (1100)
0...23000 **(0...1600)**	*11600* (800)	*24650* (1700)

PROGRAMMABLE OPTIONS

Password protection
Engineering units: 24 availables (1)
Rangeability, zero offset
Risoluzion and displayed value damping
Analogic output damping
Alarm contact type: NPN or PNP
Histeresys, window and delay of alarm contacts
Backlight time

(1) bar; mbar; at; kPa; MPa; PSI; kg/cm2; mmHg; inHg; mH2O; cmH2O; mmH2O; mm; m; feet; inch; l; kg; t; m3; gal; lb; %; mA

ISO 9001 : 2008
Cert. nr. 0433/6

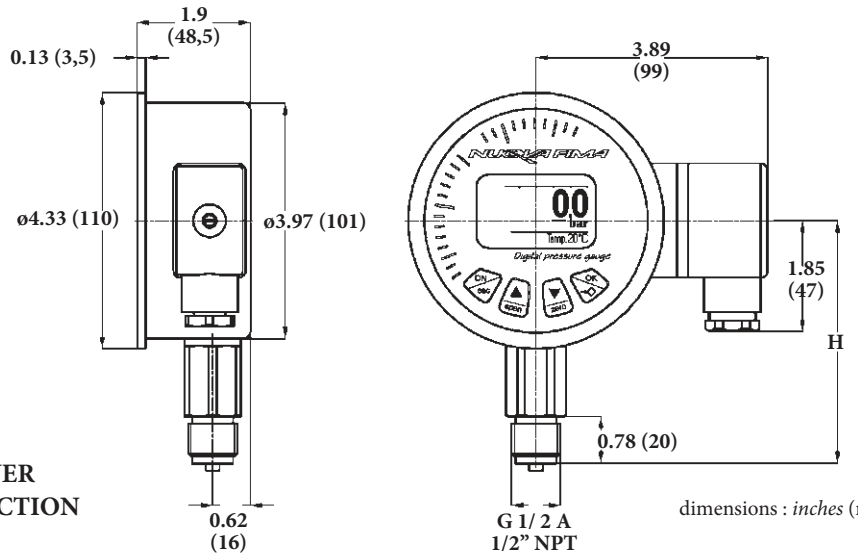

Pn (bar)	H
≤ 100	*4.13"* (105)
> 100	*4.29"* (109)

A - LOWER CONNECTION

dimensions : *inches* (mm)

Output signal	**4...20 mA**
N. wires	3
Load (Ohm)	$R_L \leq (V_{in}-11)/0{,}02$
Supply: $+V_{in}$	11…30
Ground	(pls. refer to Installation Manual)

Alarms	**2**
Tipo, programmabile	PNP, NPN
Max output current: I_{out} (1)	100 mA
Min. load (Ohm)	$R_{Lm} \geq (V_{in}-1)/I_{out}$
Supply: $+V_{in}$	11…30

(1) max value current 0,6 A available on request, NPN or PNP type for both alarms

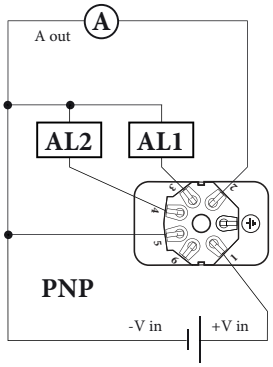

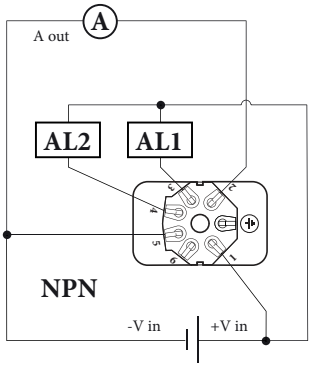

OPTIONS

CRP -	CR gasket, for pressure ranges ≤ *1500 psi* (100 bar); process fluid temperature: -40…+176 °F (-40...+85°C)
EPD -	EPDM gasket, for pressure ranges ≤ *1500 psi* (100 bar); process fluid temperature: +5…+212 °F (-40...+100°C)
FPM -	VITON gasket, for pressure ranges ≤ *6000 psi* (400 bar); process fluid temperature: -40…+212 °F (-15...+100°C)
NBR -	NBR gasket; process fluid temperature: -13…+176 °F (-25...+85°C)
NP2 -	Nr. 2 NPN alarms with 0,6A output current
PN2 -	Nr. 2 PNP alarms with 0,6A output current

"HOW TO ORDER" SEQUENCE

Section / Model / Case / Mounting / Diameter / Range / Process connection / Output signal / Gasket / Options

8	D18	1	A	E - DN100	41M - G 1/2 A	A	CRP	NP2
					43M - 1/2" NPT		EPD	PN2
							FPM	
							NBR	

Copyright © Nuova Fima S.r.l. All rights reserved. Any part of this publication should not be reproduced without a written Nuova Fima's S.r.l. approval

NUOVA FIMA USA Inc.
www.nuovafima.com - e-mail: infousa@nuovafima.com
4123 Hollister, Suite G - TX 77080 Houston
TEL. +1 713.690.9800 - FAX +1 713.690.9803

NUOVA FIMA srl
www.nuovafima.com - e-mail: info@nuovafima.com
P.O. BOX 58 - VIA C. BATTISTI 59 - 28045 INVORIO (NO) ITALY
TEL. +39 0322 253200 - FAX +39 0322 253232

RB3 - 04/13

IN ORDER TO IMPROVE THEIR PRODUCTION, MESSRS. NUOVA FIMA RESERVE THE RIGHT TO THEMSELVES TO MAKE ALL THE MODIFICATIONS THAT THEY DEEM INDISPENSABLE AT ANY TIME. UPDATED DATA-SHEETS ARE AVAILABLE ON SITE: www.nuovafima.com

NUOVA FIMA S.r.l.
P.O. BOX 58 Via Cesare Battisti, 59
28045 Invorio (NO) Italy
Tel. +39 0322.253200
Fax +39 0322.253232
info@nuovafima.com

www.nuovafima.com

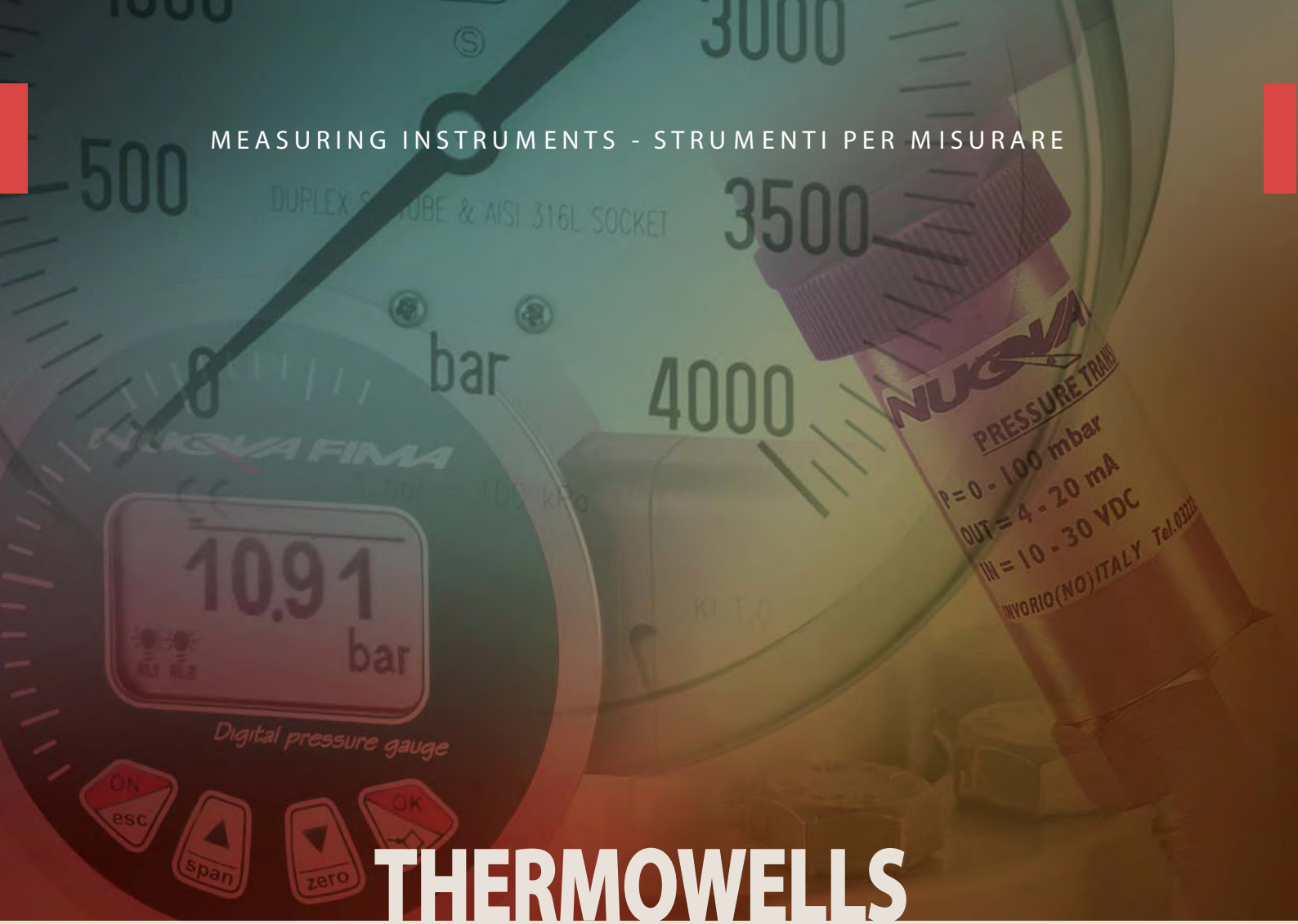

MEASURING INSTRUMENTS - STRUMENTI PER MISURARE

THERMOWELLS

NUOVA FIMA

introduction to thermowells

Thermowells are used to protect bulbs from the effects of corrosion and process fluid flow, due to the high speed at which the process fluid flows, and to enable the thermometer to be interchanged, recalibrated, or replaced, without disturbing the process.

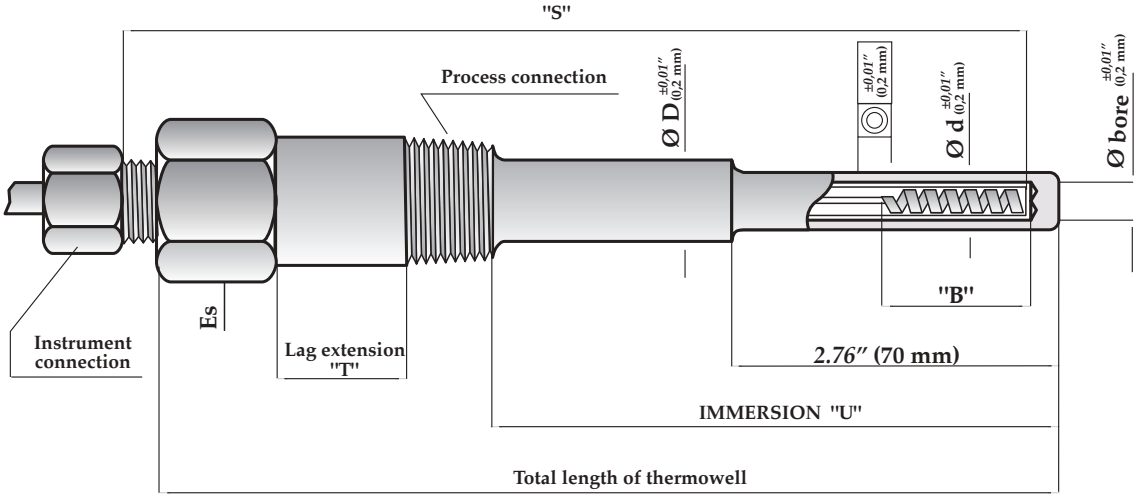

DEFINITION

Immersion "U"

This is the part of the thermowell extending from the underside of the process connection (threaded or flanged) to the tip of the shank that is inserted into the process fluid. The length varies from a minimum of *2.76"* (70 mm) to a maximum of *196"* (5000 mm) and is sized to suit the length of the sensitive part of thermometer bulbs and the section of the process pipe.

Lag extension "T"

This is the part of the well between the upper tip of the process connection (threaded or flanged) to the lower edge of the hexagon, and it is used to space the body of the temperature instrument, or the electrical connections in the case of thermocouples and thermal resistors, away from the process pipe.

Shank style

The shank is the portion of the thermowell that is inserted into the process, and its shape depends on the characteristics of the process fluid. A tapered shank style, for example, is the most suitable for applications with vapour at high temperature and speed, because it is particularly resistant to the effects of vibrations produced by the speed of the process fluid.

"S" dimension

This dimension related to the temperature sensors, rather than the thermowells. However, it is essential for obtaining a perfect coupling between the two. The "S" dimension can be calculated as follows: total length of the thermowell minus 10 mm.

Sensitive portion "B"

This is another dimension of the temperature sensors and not of the thermowells. When a temperature sensor is connected to a thermowell the sensitive part of the bulb must be located within the "U" immersion area.

GUIDE TO CHOOSING A THERMOWELL

MATERIALS

The choice of materials is generally based upon considerations of resistance to corrosion by the process fluid. Mirror polishing of the part that is immersed in the process confers maximal corrosion-resistance to the thermowell. In addition to the standard materials detailed on the following pages, rod-machined thermowells can also be constructed from MONEL 400, Hastelloy C276, Alloy 825, Alloy 625, Duplex SAF 2205, and Duplex SAF 2507. For special corrosion-resistance requirements, some thermowells may also be coated in PTFE.

PROCESS CONNECTI0NS

The threads on thermowell connectors conform to the ASME B1.20.1 standards for NPT threads, and to DIN 3852 form A for Gas threads (UNI 338-BSP). Flanged thermowells have special threaded connectors which are welded to flanges that conform to the ANSI B16.5 or DIN-UNI standards. In these thermowells, the mechanical strength is assured by the threaded connection between the flange and thermowell, while the weld merely acts as a seal.

IMMERSION DEPTH "U"

For optimal measurement accuracy of the temperature sensing element (thermometer or thermistor), it is essential that the sensitive portion of the element be located entirely within the immersion depth.

Therefore, when selecting a thermowell it is essential to know the exact length of the sensitive portion of the temperature instrument. On bimetallic thermometers and those filled with inert gases and liquid, the sensitive portions vary depending on the measuring range. Refer to catalogue data sheets TB and TG which list the respective dimensions.

THERMOWELL BORE

Different installations require a variety of different instruments for the measurement of temperature. The use of standard bore diameters facilitates interchangeability of the temperature sensors. The thermowells in this catalogue come in the following bore diameters:

Ø *0.28″* (7 mm) bore
For bimetallic thermometers (BT) with Ø *0.24″* (6 mm) or Ø *0.26″* (6,5 mm) (1/4") bulb diameter. For thermocouples or thermistors.

Ø *0.39″* (10 mm) bore
For bimetallic thermometers (BT) with Ø *0.31″* (8 mm) or Ø *0.38″* (9,6 mm) bulb diameter.For inert gas thermometers with Ø *0.31″* (8 mm) and Ø *0.38″* (9,6 mm) bulb diameter.

Ø *0.47″* (12 mm) bore.
For inert gas thermometers with Ø *0.45″* (11,5 mm) bulb diameter.

Process fluid speed

When a thermowell is inserted into a process at a specific fluid speed it creates a turbulent wake (Von Karman Trail), which will have a particular frequency determined by the diameter of the thermowell and the speed of the process fluid. It is important for the thermowell dimensions to be chosen so that the frequency of the Karman wake is less than the resonant frequency of the thermowell. If these frequencies should coincide, the resulting vibrations will cause the destruction of the thermowell.

The maximum speeds and admissible lengths for the W50-60 range and W74-75-93 model thermowells at a temperature of 400 °C are shown alongside (the graph must be taken as a guide and does not replace checking, which must be carried out in depth).

Pressure temperature relation

The maximum permitted working pressure varies as a function of thermocouple wall thickness and temperature. In the pages that follow, graphs are provided that show the maximum operating pressures for thermowells made of AISI 304 or AISI 316, without taking the process fluid speed into consideration.

Checking conformity

The thermowells chosen can be checked by out Technical Department, in accordance with ASME PTC 19.3. This will result in a certificate being issued that states that the thermowell has been checked for conformity in relation to the plant's operating conditions.

When this service is required, the following must be provided:

- Exact thermowell immersion dimensions (bore Ø, point and connections);
- thermowell material;
- pressure, temperature, speed and density of process fluid.

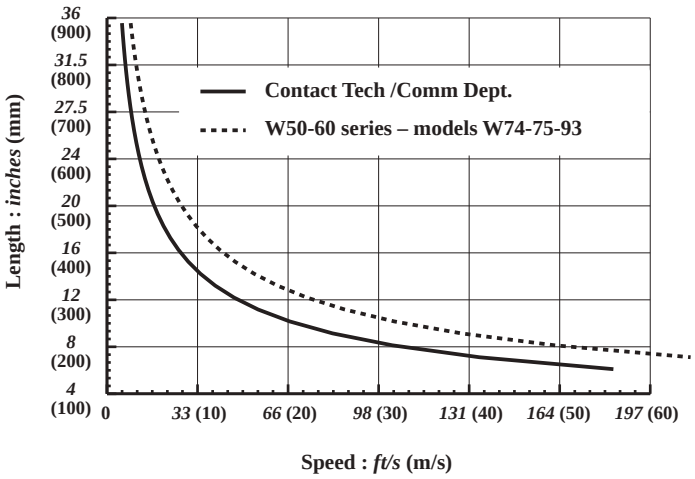

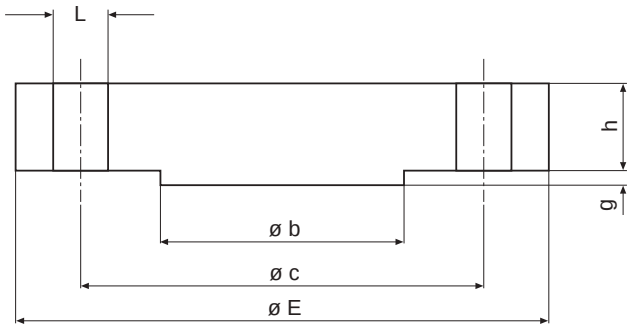

FLANGED CONNECTIONS TO ASME STANDARDS: DIMENSIONS

dimensions : *inches*

DN	Class-psi (1)	Cod.	E	b	h	g	c	L	N (2)
3/4"	150	5AA	3.88	1.69	0.96	0.06	2.75	0.63	0.16
3/4"	300	5BA	4.63	1.69	1.14	0.06	3.25	0.75	0.16
3/4"	600	5DA	4.63	1.69	1.14	0.25	3.25	0.75	0.16
3/4"	900	5EA	5.12	1.69	1.22	0.25	3.25	0.87	0.16
3/4"	1500	5FA	5.12	1.69	1.22	0.25	3.25	0.87	0.16
1"	150	6AA	4.25	2	0.96	0.06	3.13	0.63	0.16
1"	300	6BA	4.88	2	1.2	0.06	3.50	0.75	0.16
1"	600	6DA	4.88	2	1.2	0.25	3.50	0.75	0.16
1"	900	6EA	5.87	2	1.38	0.25	4	1.02	0.16
1"	1500	6FA	5.87	2	1.38	0.25	4	1.02	0.16
1 1/2"	150	AAA	5	2.87	0.93	0.06	3.87	0.63	0.16
1 1/2"	300	ABA	6.12	2.87	1.28	0.06	4.5	0.87	0.16
1 1/2"	600	ADA	6.12	2.87	1.28	0.25	4.5	0.87	0.16
1 1/2"	900	AEA	7.01	2.87	1.46	0.25	4.37	1.14	0.16
1 1/2"	1500	AFA	7.01	2.87	1.46	0.25	4.37	1.14	0.16
2"	150	BAA	6	3.63	0.96	0.06	4.75	0.75	0.16
2"	300	BBA	6.5	3.63	1	0.06	5	0.75	0.32
2"	600	BDA	6.5	3.63	1	0.25	5	0.75	0.32
2"	900	BEA	8.5	3.63	1.5	0.25	6.5	1	0.32
2"	1500	BFA	8.5	3.63	1.5	0.25	6.5	1	0.32

FLANGED CONNECTIONS TO UNI-DIN STANDARDS: DIMENSIONS

dimensions : mm

DN	NP-bar (1)	Cod.	E	b	h	g	c	L	N (2)
20	6	PO0	**90**	50	12	2	65	11	4
20	10...16	PQ0	**105**	58	14	2	75	14	4
20	25...40	PS0	**105**	58	16	2	75	14	4
20	100	PU0	**130**	58	20	2	90	18	4
25	6	QO0	**100**	60	12	2	75	11	4
25	10...16	QQ0	**115**	68	14	2	85	14	4
25	25...40	QS0	**115**	68	16	2	85	14	4
25	100	QU0	**140**	65	22	2	100	18	4
40	6	SO0	**130**	80	11	3	100	14	4
40	10...16	SQ0	**150**	88	13	3	110	18	4
40	25...40	SS0	**150**	88	15	3	110	18	4
40	100	SU0	**170**	85	23	3	125	22	4
50	6	TO0	**140**	90	11	3	110	14	4
50	10...16	TQ0	**165**	102	15	3	125	18	4
50	25...40	TS0	**165**	102	17	3	125	18	4
50	100	TU0	**195**	95	25	3	145	27	4

1) The pressure applied must not exceed 1,5 times the NP for a 20U30AC flange and 1 times the NP for a 340 AC flange.
2) NA boring right through.

TOLERANCE AND MACHINING CHARACTERISTICS

OUTSIDE DIAMETER:
±0,01″ (0,2 mm)

BORE DIAMETER:
±0,01″ (0,2 mm)

BORE CONCENTRICITY:
10% of the thermowell wall thickness.

BASE THICKNESS::
±0,04″ (1 mm)

LENGTHS:
±0,04″ (1 mm)

IMMERSION FINISH (for bar-stock thermowells):
Ra 3,2Hm; Rz 12,5 Hm; 125 AARH standard finish
Ra 0,8 Hm; Rz 3,2 Hm; 32 AARH for polished finish – to be indicated in order

WELDING
All welds carried out on stainless steel thermowells are done in inert gas atmospheres, with or without the addition of material. Flanged thermowells with full penetration welds are available upon request.

MARKING
The threaded thermowells have the following markings on the hexagon or round bar:
Material – Immersion – Client's Logo
E.G. AISI 316 - U=125 - TW 1256
The flange of flanged thermowells have the following markings:
Flange rating – Material – Immersion – Client's Logo
E.G. 1" 150 RF 125AARH - ASTM A 105 - U=250 - TW1256
If the thermowell is made of material that differs from that of the flange, the material will also be marked on the thermowell.

Standard welding

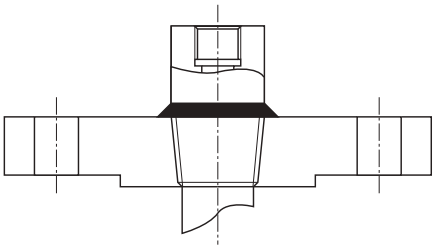

Double welding

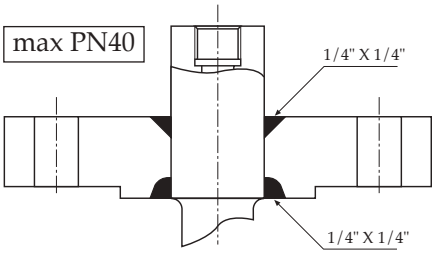

Full penetration welding

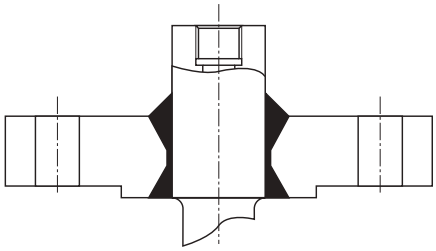

Cap and chain

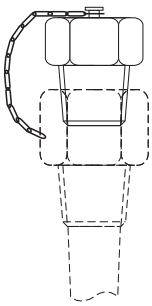

Nipple + *5.12″* (130 mm) hose

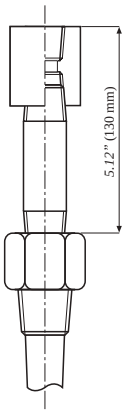

RB3 - 08/08

IN ORDER TO IMPROVE THEIR PRODUCTION, MESSRS. NUOVA FIMA RESERVE THE RIGHT TO THEMSELVES TO MAKE ALL THE MODIFICATIONS THAT THEY DEEM INDISPENSABLE AT ANY TIME. UPDATED DATA-SHEETS ARE AVAILABLE ON SITE: www.nuovafima.com

NUOVA FIMA S.p.A. - www.nuovafima.com
P.O. BOX 58 - VIA C. BATTISTI 59 - 28045 INVORIO (NO) ITALY
TEL. +39 0322 253200 - FAX +39 0322 253232

built-up thermowells, straight shank with threaded connection, NP25

W10, W20 serie

Thermowells are used to to protect the measuring instrument from corrosion, high pressure or hgih fluid velocity and to allow the measuring instrument removal for recalibration or replacement without affecting the process system. The w10-W20 serie includes thermowells with threaded process connection. These thermowells are suitable for low/medium work intensity.

9 - Thermowells

Nominal pressure: *360 psi @ 752°F* (25 bar @ 400°C).
Process fluid temperature: *-328...+752°F* (-200...+400 °C), for std materials.
Total length: *196" max* (5000 mm).
Insertion hole: **100 -** *ø 0,39"* (10 mm); **120 -** *ø 0,47"* (12 mm)
Materials :
insertion, AISI 316 (**Cod. 4**), AISI 316L (**Cod. 5**) st.st. seamless tube; thread, AISI 316, AISI 316L st.st. bar-stock.

OPTIONS

E30 -	NACE MR0103/MR0175 - ISO15156-3 certificate
P02 -	Oxygen service
TC1 -	Plug and chain (1)

(1) Drawings and details in the "Thermowells information " sheet.

R04-04/13

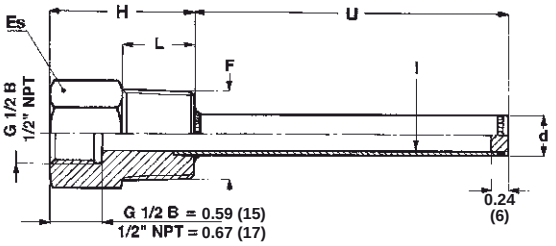

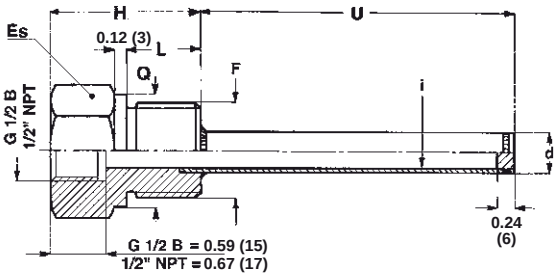

Mod.	Es.	F	i	d	H	L	Q
W11	*0.94* (24)	43M 1/2″ NPT	*0.39* (10)	*0.47* (12)	*1.65* (42)	*0.67* (17)	-
			0.47 (12)	*0.55* (14)			
W12	*1.06* (27)	53M 3/4″ NPT	*0.39* (10)	*0.47* (12)	*1.69* (43)	*0.71* (18)	-
			0.47 (12)	*0.55* (14)			
		41M G 1/2 B	*0.39* (10)	*0.47* (12)	*1.42* (36)	*0.55* (14)	*1.02* (26)
			0.47 (12)	*0.55* (14)			
W13	*1.42* (36)	63M 1″ NPT	*0.39* (10)	*0.47* (12)	*1.81* (46)	*0.83* (21)	-
			0.47 (12)	*0.55* (14)			
	1.26 (32)	51M G 3/4 B	*0.39* (10)	*0.47* (12)	*1.50* (38)	*0.63* (16)	*1.25* (31,7)
			0.47 (12)	*0.55* (14)			
W14	*1.61* (41)	61M G 1 B	*0.39* (10)	*0.47* (12)	*1.57* (40)	*0.71* (18)	*1.54* (39)
			0.47 (12)	*0.55* (14)			

dimensions : *inches* (mm)

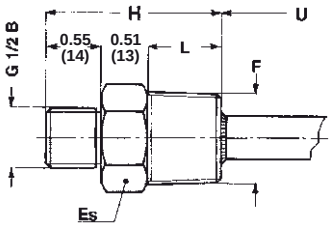

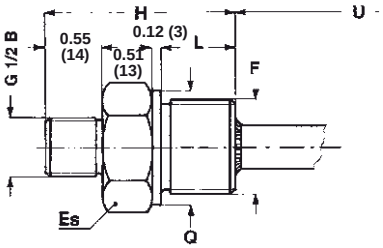

Mod.	Es.	F	i	d	H	L	Q
W21	*0.87* (22)	43M 1/2″ NPT	*0.39* (10)	*0.47* (12)	*1.73* (44)	*0.67* (17)	-
			0.47 (12)	*0.55* (14)			
W22	*1.06* (27)	53M 3/4″ NPT	*0.39* (10)	*0.47* (12)	*1.77* (45)	*0.71* (18)	-
			0.47 (12)	*0.55* (14)			
		41M G 1/2 B	*0.39* (10)	*0.47* (12)	*1.61* (41)	*0.55* (14)	*1.02* (26)
			0.47 (12)	*0.55* (14)			
W23	*1.42* (36)	63M 1″ NPT	*0.39* (10)	*0.47* (12)	*1.89* (48)	*0.83* (21)	-
			0.47 (12)	*0.55* (14)			
	1.26 (32)	51M G 3/4 B	*0.39* (10)	*0.47* (12)	*1.69* (43)	*0.63* (16)	*1.25* (31,7)
			0.47 (12)	*0.55* (14)			
W24	*1.61* (41)	61M G 1 B	*0.39* (10)	*0.47* (12)	*1.77* (45)	*0.71* (18)	*1.54* (39)
			0.47 (12)	*0.55* (14)			

dimensions : *inches* (mm)

"HOW TO ORDER" SEQUENCE

Section / Model / Material / Instrument connection / Process connection / Insertion hole / Insertion length / Extension length / Options

Section	Model	Material	Instrument connection	Process connection	Insertion hole	Insertion length	Extension length	Options
9	W11	4	41F - G 1/2	41M	100			E30...TC1
	W12	5	43F - 1/2 NPT	51M	120			
	W13		41M - G 1/2 B	61M				
	W14			43M				
	W21			53M				
	W22			63M				
	W23							
	W24							

IN ORDER TO IMPROVE THEIR PRODUCTION, MESSRS. NUOVA FIMA RESERVE THE RIGHT TO THEMSELVES TO MAKE ALL THE MODIFICATIONS THAT THEY DEEM INDISPENSABLE AT ANY TIME. UPDATED DATA-SHEET ARE AVAILABLE ON SITE: www.nuovafima.com

NUOVA FIMA S.p.A. - www.nuovafima.com
P.O. BOX 58 - VIA C. BATTISTI 59 - 28045 INVORIO (NO) ITALY
TEL. +39 0322 253200 - FAX +39 0322 253232

built-up thermowells, straight shank, with flanged connection, NP 6...25

W82

Thermowells are used to to protect the measuring instrument from corrosion, high pressure or hgih fluid velocity and to allow the measuring instrument removal for recalibration or replacement without affecting the process system. TheW82 serie includes bar-stock thermowells with flanged process connection. These thermowells are suitable for low/medium work intensity.

9.W82 - Standard Model

Nominal pressure: as flange rating, 360 *psi @ 752°F max* (25 bar @ 400°C).
Process fluid temperature: *-328...+752°F* (-200...+400°C), for std materials.
Total length: *196" max* (5000 mm).
Insertion hole: **100 -** *ø 0,39"* (10 mm); **120 -** *ø 0,47"* (12 mm)
Process connection: plain flanges as per UNI-DIN or ASME B16.5; dimensions and finishing as defined in "Thermowell information" sheet.
Materials: AISI 316 (**Cod. 4**) or AISI 316L (**Cod. 5**) st.st tube and thread; ASTM A 105 (**Cod. 3**), AISI 316 (**Cod. 4**) st.st flange.

OPTIONS

P02 -	Oxygen service
E30 -	NACE MR0103/MR0175 - ISO15156-3 certificate
TC1 -	Plug and chain (1)
NIP -	Nipple with coupling (1)
P04 -	Dye penetrant test (1)

(1) Drawings and details in the "Thermowells information " sheet.

R84 - 04/13

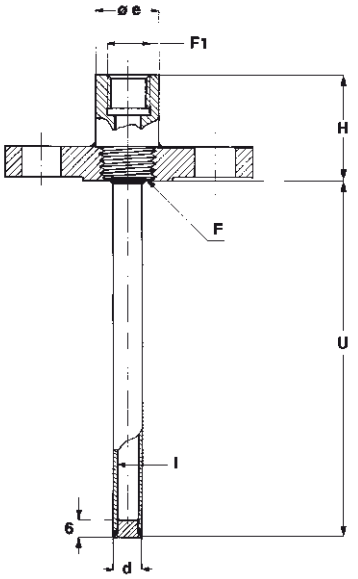

F1
41F - G 1/2
43F - 1/2-14 NPT
53F - 3/4-14 NPT

dimensions : *inches* (mm)

Standard (1)	DN		F	e	H	i	d
ASME B16.5	1/2″	Class 150...300	1/2″ NPT	*1.18* (30)	*1.57* (40)	*0.39* (10)	*0,47* (12)
	3/4″		1/2″ NPT				
	1″		3/4″ NPT				
	1″ 1/2		1″ NPT	*1.38* (35)		*0,47* (12)	*0.55* (14)
	2″		1″ NPT				
DIN-UNI	15	NP 6...25 bar	1/2″ NPT	*1.18* (30)	*1.57* (40)	*0.39* (10)	*0,47* (12)
	20		1/2″ NPT				
	25		3/4″ NPT				
	32		1″ NPT	*1.38* (35)		*0,47* (12)	*0.55* (14)
	40		1″ NPT				
	50		1″ NPT				

(1) flange dimensions are shown on introductory data-sheet "Introduction to thermowells"

"HOW TO ORDER" SEQUENCE

Section	Model	Material	Flange material	Instrument connection	Process connection	Insertion hole	Insertion length	Extension length	Options
9	W82	4	3	41F	6AA	100			P02...P04
		5	4	43F		120			
				53F					

IN ORDER TO IMPROVE THEIR PRODUCTION, MESSRS. NUOVA FIMA RESERVE THE RIGHT TO THEMSELVES TO MAKE ALL THE MODIFICATIONS THAT THEY DEEM INDISPENSABLE AT ANY TIME. UPDATED DATA-SHEET ARE AVAILABLE ON SITE: www.nuovafima.com

NUOVA FIMA S.p.A. - www.nuovafima.com
P.O. BOX 58 - VIA C. BATTISTI 59 - 28045 INVORIO (NO) ITALY
TEL. +39 0322 253200 - FAX +39 0322 253232

bar-stock thermowells, stepped shank, with threaded connection, NP100

W30, W40 serie

Thermowells are used to to protect the measuring instrument from corrosion, high pressure or hgih fluid velocity and to allow the measuring instrument removal for recalibration or replacement without affecting the process system. The W30-W40 serie includes bar-stocked thermowells with a threaded process connection and they are suitable for heavy work conditions. These thermowells have a stepped-shank immersion length for a better process temperature measuring sesibility.

9 - Thermowells

Nominal pressure: *1450 psi @ 752°F (*100 bar @ 400°C).
Process fluid temperature: *-328...+1112°F* (-200...+600°C), for std materials.
Total length: *40″ max (*1000 mm).
Materials : AISI 316 (**Cod. 4**), AISI 316L (**Cod. 5**) st.st. bar-stock.
Special materials : Monel 400, Hastelloy C276, Alloy 825, Alloy 625, Duplex SAF 2205, Duplex SAF 2507 bar-stock.

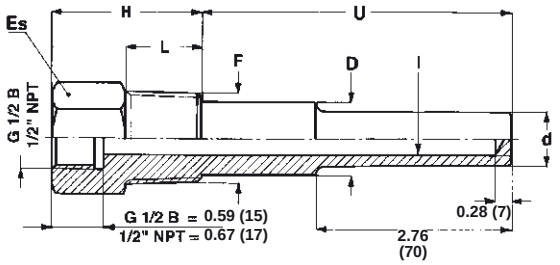

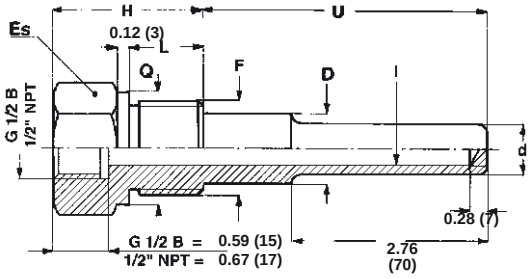

dimensions : *inches* (mm)

Mod.	Es.	F	i	D	d	H	L	Q
W31	*0.94* (24) (1)	**43M** 1/2″ NPT	*0.28-0.31-0.35* (7 - 8 -9)	*0.71* (18)	*0.59* (15)	*1.81* (46)	*0.79* (20)	-
			0.39-0.47 (10 - 12)		*0.71* (18)			
W32	*1.06* (27)(1)	**53M** 3/4″ NPT	*0.28-0.31-0.35* (7 - 8 -9)	*0.71* (18)	*0.59* (15)	*1.81* (46)	*0.79* (20)	-
			0.39-0.47 (10 - 12)	*0.83* (21)	*0.71* (18)			
		41M G 1/2 B	*0.28-0.31-0.35* (7 - 8 -9)	*0.71* (18)	*0.59* (15)	*1.81* (46)	*0.79* (20)	*1.02* (26)
			0.39-0.47 (10 - 12)		*0.71* (18)			
W33	*1.42* (36) (2)	**63M** 1″ NPT	*0.28-0.31-0.35* (7 - 8 -9)	*0.83* (21)	*0.59* (15)	*2.01* (51)	*0.98* (25)	-
			0.39-0.47 (10 - 12)	*0.98* (25)	*0.71* (18)			
		51M G 3/4 B	*0.28-0.31-0.35* (7 - 8 -9)	*0.71* (18)	*0.59* (15)	*1.81* (46)	*0.79* (20)	*1.25* (31,7)
			0.39-0.47 (10 - 12)	*0.83* (21)	*0.71* (18)			
W34	*1.61* (41)	**61M** G 1 B	*0.28-0.31-0.35* (7 - 8 -9)	*0.83* (21)	*0.59* (15)	*2.01* (51)	*0.79* (20)	*1.54* (39)
			0.39-0.47 (10 - 12)	*0.98* (25)	*0.71* (18)			

(1) For insertion length > *16″* (400 mm) and/or special material : round bar stock *ø 1.18* (30mm) with *0.94″* (24 mm) key.

(2) For insertion length > *28″* (700 mm) and/or special material : round bar stock *ø 1.38* (35mm) with *1.06″* (27 mm) key.

RB4 - 04/13

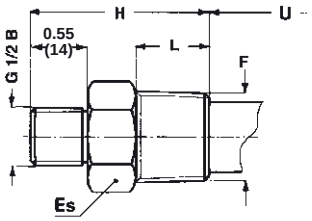

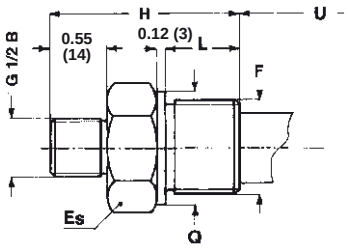

dimensions : *inches* (mm)

Mod.	Es.	F	i	D	d	H	L	Q
W41	*0.94* (24) (1)	**43M** 1/2″ NPT	*0.28-0.31-0.35* (7 - 8 -9)	*0.71* (18)	*0.59* (15)	*2.24* (57)	*0.79* (20)	-
			0.39-0.47 (10 - 12)		*0.69* (18)			
W42	*1.06* (27)(1)	**53M** 3/4″ NPT	*0.28-0.31-0.35* (7 - 8 -9)	*0.71* (18)	*0.59* (15)	*2.24* (57)	*0.79* (20)	-
			0.39-0.47 (10 - 12)	*0.83* (21)	*0.71* (18)			
		41M G 1/2 B	*0.28-0.31-0.35* (7 - 8 -9)	*0.71* (18)	*0.59* (15)	*2.24* (57)	*0.79* (20)	*1.02* (26)
			0.39-0.47 (10 - 12)		*0.71* (18)			
W43	*1.42* (36) (2)	**63M** 1″ NPT	*0.28-0.31-0.35* (7 - 8 -9)	*0.83* (21)	*0.59* (15)	*2.44* (62)	*0.98* (25)	-
			0.39-0.47 (10 - 12)	*0.98* (25)	*0.71* (18)			
		51M G 3/4 B	*0.28-0.31-0.35* (7 - 8 -9)	*0.71* (18)	*0.59* (15)	*2.24* (57)	*0.79* (20)	*1.25* (31,7)
			0.39-0.47 (10 - 12)	*0.83* (21)	*0.71* (18)			
W44	*1.61* (41)	**61M** G 1 B	*0.28-0.31-0.35* (7 - 8 -9)	*0.83* (21)	*0.59* (15)	*2.44* (62)	*0.79* (20)	*1.54* (39)
			0.39-0.47 (10 - 12)	*0.98* (25)	*0.71* (18)			

(1) For insertion length > *16″* (400 mm) and/or special material : round bar stock *ø 1.18* (30mm) with *0.94″* (24 mm) key.

(2) For insertion length > *28″* (700 mm) and/or special material : round bar stock *ø 1.38* (35mm) with *1.06″* (27 mm) key.

OPTIONS

P02 -	Oxygen service
E30 -	NACE MR0103 - MR0175 (ISO15156) certificate
TC1 -	Plug and chain (1)
NIP -	Nipple with coupling (1)

(1) Drawings and details in the "Thermowells information " sheet.

i
070 - *ø 0.28* (7)
080 - *ø 0.31* (8)
090 - *ø 0.35* (9)
100 - *ø 0.39* (10)
120 - *ø 0.47* (12)

"HOW TO ORDER" SEQUENCE

Section	Model	Material	Instrument connection	Process connection	Insertion hole	Insertion length	Extension length	Options
9	W31	4	41F - G 1/2	41M	070			P02...NIP
	W32	5	43M - 1/2 NPT	51M	080			
	W33		41M - G 1/2 B	61M	090			
	W34			43M	100			
	W41			53M	120			
	W42			63M				
	W43							
	W44							

IN ORDER TO IMPROVE THEIR PRODUCTION, MESSRS. NUOVA FIMA RESERVE THE RIGHT TO THEMSELVES TO MAKE ALL THE MODIFICATIONS THAT THEY DEEM INDISPENSABLE AT ANY TIME. UPDATED DATA-SHEET ARE AVAILABLE ON SITE: www.nuovafima.com

NUOVA FIMA S.p.A. - www.nuovafima.com
P.O. BOX 58 - VIA C. BATTISTI 59 - 28045 INVORIO (NO) ITALY
TEL. +39 0322 253200 - FAX +39 0322 253232

bar-stock thermowells, stepped shank, with flanged connection, NP 6...100

W92

Thermowells are used to to protect the measuring instrument from corrosion, high pressure or hgih fluid velocity and to allow the measuring instrument removal for recalibration or replacement without affecting the process system. The W92 serie includes bar-stock thermowells with flanged process connection and they are suitable for heavy work conditions. These thermowells have a stepped-shank immersion length for a better process temperature measuring sesibility.

9.W92 - Standard Model

Nominal pressure: as flange rating, *1450 psi @ 752°F max* (100 bar @ 400°C).

Process fluid temperature: *-328...+1112°F* (-200...+600°C), for std materials.

Total length: *max 40"* (1000 mm).

Process connection: plain flanges as per UNI-DIN or ASME B16.5; dimensions and finishing as defined in "Thermowell information" sheet.

Materials:
AISI 316 (**Cod. 4**) or AISI 316L (**Cod. 5**) st.st. bar-stock;
ASTM A 105 (**Cod. 3**), AISI 316 (**Cod. 4**) st.st flange.

Special materials : Monel 400, Hastelloy C276, Alloy 825, Alloy 625, Duplex SAF 2205, Duplex SAF 2507 flange and bar-stock (the flange is also available made by stainless steel, with wetted parts made by special material)

OPTIONS

P02 -	Oxygen service
E30 -	NACE MR0103/MR0175 - ISO 15156-3 certificate
TC1 -	Plug and chain (1)
NIP -	Nipple with coupling (1)
	Double welding (1)
FUL -	"full penetration" welding (1)
P04 -	Dye penetrant test (1)
CVK -	ASME PTC 19.3 TW calculation (1)

(1) Drawings and details in the "Thermowells information " sheet.

R04- 02/13

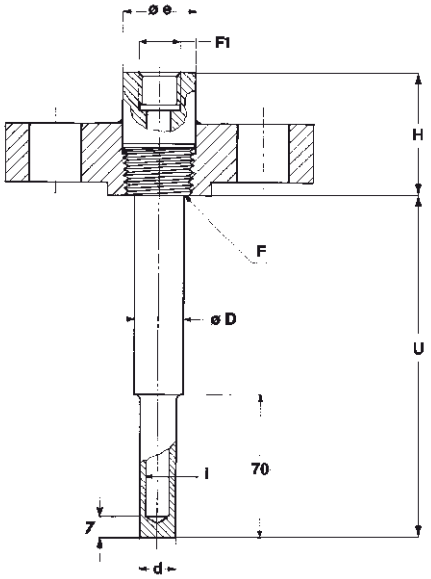

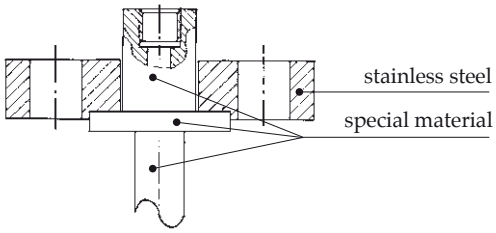

Version with stainless steel flange, but wetted parts made by special material

F1
41F - G 1/2
43F - 1/2-14 NPT
53F - 3/4-14 NPT

i
070 - ø *0.28* (7)
080 - ø *0.31* (8)
090 - ø *0.35* (9)
100 - ø *0.39* (10)
120 - ø *0.47* (12)

dimensions : *inches* (mm)

Standard	DN		F	e	H	i	D	d
ASME B16.5	3/4"	Class 150...1500	1/2" NPT	*1.18* (30)	*2.36* (60)	*0.28-0.31-0.35* (7 - 8 -9)	*0.69* (17,5)	*0.59* (15)
						0.39-0.47 (10 - 12)	*0.71* (18)	*0.71* (18)
	1"		3/4" NPT	*1.18* (30)	*2.36* (60)	*0.28-0.31-0.35* (7 - 8 -9)	*0.71* (18)	*0.59* (15)
						0.39-0.47 (10 - 12)	*0.83* (21)	*0.71* (18)
	1"1/2 2"		1" NPT	*1.38* (35)	*2.36* (60)	*0.28-0.31-0.35* (7 - 8 -9)	*0.83* (21)	*0.59* (15)
						0.39-0.47 (10 - 12)	*0.98* (25)	*0.71* (18)
EN 1092	20	NP 6...100	1/2" NPT	*1.18* (30)	*2.36* (60)	*0.28-0.31-0.35* (7 - 8 -9)	*0.69* (17,5)	*0.59* (15)
						0.39-0.47 (10 - 12)	*0.71* (18)	*0.71* (18)
	25		3/4" NPT	*1.18* (30)	*2.36* (60)	*0.28-0.31-0.35* (7 - 8 -9)	*0.71* (18)	*0.59* (15)
						0.39-0.47 (10 - 12)	*0.83* (21)	*0.71* (18)
	32, 40, 50		1" NPT	*1.38* (35)	*2.36* (60)	*0.28-0.31-0.35* (7 - 8 -9)	*0.83* (21)	*0.59* (15)
						0.39-0.47 (10 - 12)	*0.98* (25)	*0.71* (18)

"HOW TO ORDER" SEQUENCE

Section	Model	Material	Flange material	Instrument connection	Process connection	Insertion hole	Insertion length	Extension length	Options
9	**W92**	**4**	**3**	**41F**	**6AA**	**070**			**P02...P04**
		5	**4**	**43F**		**080**			
				53F		**090**			
						100			
						120			

IN ORDER TO IMPROVE THEIR PRODUCTION, MESSRS. NUOVA FIMA RESERVE THE RIGHT TO THEMSELVES TO MAKE ALL THE MODIFICATIONS THAT THEY DEEM INDISPENSABLE AT ANY TIME. UPDATED DATA-SHEET ARE AVAILABLE ON SITE: www.nuovafima.com

NUOVA FIMA S.p.A. - www.nuovafima.com
P.O. BOX 58 - VIA C. BATTISTI 59 - 28045 INVORIO (NO) ITALY
TEL. +39 0322 253200 - FAX +39 0322 253232

bar-stock thermowells, weld-in connection, NP 100...250

W70 serie

Thermowells are used to to protect the measuring instrument from corrosion, high pressure or hgih fluid velocity and to allow the measuring instrument removal for recalibration or replacement without affecting the process system. The W72-W73 serie includes bar stock thermowells with weld-in socket process connection and they are suitable for heavy work conditions. These thermowells are suitable for low/medium work intensity. These thermowells have a stepped-shank immersion length for a better process temperature measuring sesibility. The W75-W75 serie includes bar stock thermowells with weld-in socket process connection and they are suitable for heavy work conditions. These thermowells have a conic immersion length.

9 - Thermowells

Nominal pressure:
stepped shank : *11450 psi @ 752°F (*100 bar @ 400°C);
tapered shank : *3600 psi @ 752°F (*250 bar @ 400°C).
Process fluid temperature: *-328...+1112°F* (-200...+600°C), for std materials.
Total length: *max 40" (*1000 mm).
Materials : AISI 316 (**Cod. 4**), AISI 316L (**Cod. 5**) st.st. bar-stock.
Special materials : Monel 400, Hastelloy C276, Alloy 825, Alloy 625, Duplex SAF 2205, Duplex SAF 2507 bar-stock.

OPTIONS

P02 -	Oxygen service
E30 -	NACE MR0103 - MR0175 (ISO15156) certificate
TC1 -	Plug and chain (1)
NIP -	Nipple with coupling (1)
CVK -	Von Karman Trail calculation (1) (2)

(1) Drawings and details in the "Thermowells information " sheet.
(2) Available for tapered shank only .

RB4 - 04/13

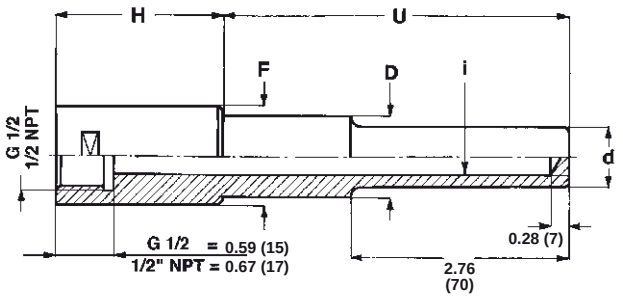

Mod.	DN	F	i	D	d	H
W72	3/4″	*1.06* (26,9)	*0.28-0.31-0.35* (7 - 8 -9)	*0.75* (19)	*0.59* (15)	*1.81* (46)
			0.39-0.47 (10 - 12)	*0.75* (19)	*0.71* (18)	
W73	1″	*1.31* (33,4)	*0.28-0.31-0.35* (7 - 8 -9)	*0.87* (22)	*0.59* (15)	*2.01* (51)
			0.39-0.47 (10 - 12)	*0.87* (22)	*0.71* (18)	

dimensions : *inches* (mm)

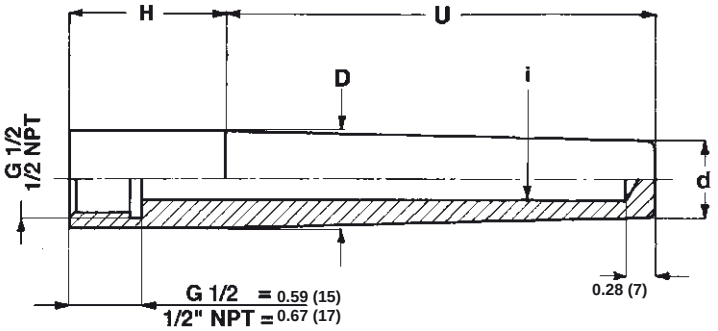

Mod.	DN	i	D	d	H
W74	1″	*0.28-0.31-0.35* (7 - 8 -9)	*1.31* (33,4)	*0.71* (18)	*2.01* (51)
		0.39-0.47 (10 - 12)		*0.83* (21)	
W75	1″1/4	*0.28-0.31-0.35* (7 - 8 -9)	*1.66* (42,16)	*0.71* (18)	*2.01* (51)
		0.39-0.47 (10 - 12)		*0.83* (21)	

dimensions : *inches* (mm)

i
070 - ø *0.28* (7)
080 - ø *0.31* (8)
090 - ø *0.35* (9)
100 - ø *0.39* (10)
120 - ø *0.47* (12)

"HOW TO ORDER" SEQUENCE

Section	Model	Material	Instrument connection	Process connection	Insertion hole	Insertion length	Extension length	Options
9	W72	4	41F - G 1/2	700	070			P02...CVK
	W73	5	43M - 1/2 NPT		080			
	W74				090			
	W75				100			
					120			

IN ORDER TO IMPROVE THEIR PRODUCTION, MESSRS. NUOVA FIMA RESERVE THE RIGHT TO THEMSELVES TO MAKE ALL THE MODIFICATIONS THAT THEY DEEM INDISPENSABLE AT ANY TIME. UPDATED DATA-SHEET ARE AVAILABLE ON SITE: www.nuovafima.com

NUOVA FIMA S.p.A. - www.nuovafima.com
P.O. BOX 58 - VIA C. BATTISTI 59 - 28045 INVORIO (NO) ITALY
TEL. +39 0322 253200 - FAX +39 0322 253232

bar-stock thermowells, tapered shank, with threaded connection, NP250

W50, W60 serie

Thermowells are used to to protect the measuring instrument from corrosion, high pressure or hgih fluid velocity and to allow the measuring instrument removal for recalibration or replacement without affecting the process system.The W50-W60 serie includes bar-stocked thermowells with a threaded process connection and they are suitable for heavy work conditions. These thermowells have a conic immersion length.

9 - Thermowells

Nominal pressure: *3600 psi @ 752°F (*250 bar @ 400°C).
Process fluid temperature: *-328...+1112°F* (-200...+600°C), for std materials.
Total length: *40″ max (*1000 mm).
Materials : AISI 316 (**Cod. 4**), AISI 316L (**Cod. 5**) st.st. bar-stock.
Special materials : Monel 400, Hastelloy C276, Alloy 825, Alloy 625, Duplex SAF 2205, Duplex SAF 2507 bar-stock.

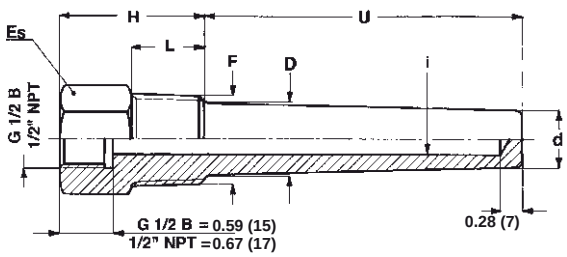

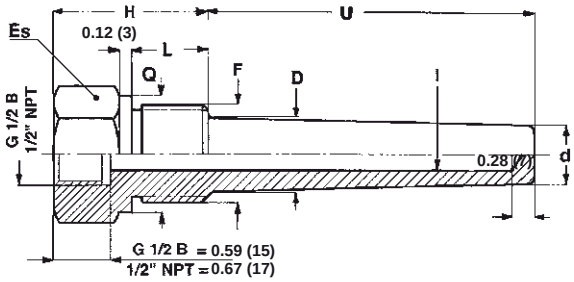

dimensions : *inches* (mm)

Mod.	Es.	F	i	D	d	H	L	Q
W52	*1.06* (27)(1)	**53M** 3/4″ NPT	*0.28-0.31-0.35* (7 - 8 -9)	*0.91* (23)	*0.71* (18)	*1.81* (46)	*0.79* (20)	-
			0.39-0.47 (10 - 12)		*0.83* (21)			
W53	*1.42* (36) (2)	**63M** 1″ NPT	*0.28-0.31-0.35* (7 - 8 -9)	*1.14* (29)	*0.71* (18)	*2.01* (51)	*0.98* (25)	-
			0.39-0.47 (10 - 12)		*0.83* (21)			
		51M G 3/4 B	*0.28-0.31-0.35* (7 - 8 -9)	*0.91* (23)	*0.71* (18)	*1.81* (46)	*0.79* (20)	*1.25* (31,7)
			0.39-0.47 (10 - 12)		*0.83* (21)			
W54	*1.61* (41)	**61M** G 1 B	*0.28-0.31-0.35* (7 - 8 -9)	*1.14* (29)	*0.71* (18)	*2.01* (51)	*0.98* (25)	*1.54* (39)
			0.39-0.47 (10 - 12)		*0.83* (21)			

(1) For insertion length > *16″* (400 mm) and/or special material : round bar stock *ø 1.18* (30mm) with *0.94″* (24 mm) key.

(2) For insertion length > *28″* (700 mm) and/or special material : round bar stock *ø 1.38* (35mm) with *1.06″* (27 mm) key.

R83 - 08/08

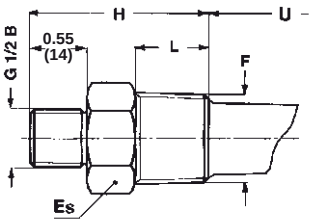

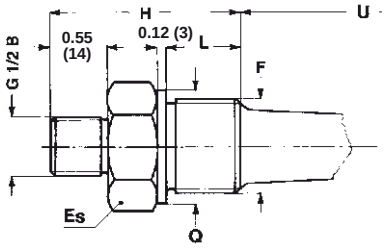

dimensions : *inches* (mm)

Mod.	Es.	F	i	D	d	H	L	Q
W62	*1.06* (27)(1)	53M	*0.28-0.31-0.35* (7 - 8 -9)	*0.91* (23)	*0.71* (18)	*2.24* (57)	*0.79* (20)	-
		3/4″ NPT	*0.39-0.47* (10 - 12)		*0.83* (21)			
W63	*1.42* (36) (2)	63M	*0.28-0.31-0.35* (7 - 8 -9)	*1.14* (29)	*0.71* (18)	*2.44* (62)	*0.98* (25)	-
		1″ NPT	*0.39-0.47* (10 - 12)		*0.83* (21)			
		51M	*0.28-0.31-0.35* (7 - 8 -9)	*0.91* (23)	*0.71* (18)	*2.24* (57)	*0.79* (20)	*1.25* (31,7)
		G 3/4 B	*0.39-0.47* (10 - 12)		*0.83* (21)			
W64	*1.61* (41)	61M	*0.28-0.31-0.35* (7 - 8 -9)	*1.14* (29)	*0.71* (18)	*2.44* (62)	*0.98* (25)	*1.54* (39)
		G 1 B	*0.39-0.47* (10 - 12)		*0.83* (21)			

(1) For insertion length > *16″* (400 mm) and/or special material : round bar stock *ø 1.18* (30mm) with *0.94″* (24 mm) key.

(2) For insertion length > *28″* (700 mm) and/or special material : round bar stock *ø 1.38* (35mm) with *1.06″* (27 mm) key.

OPTIONS

P02 -	Oxygen service
E30 -	NACE MR0103 - MR0175 (ISO15156) certificate
TC1 -	Plug and chain (1)
NIP -	Nipple with coupling (1)
CVK -	ASME PTC 19.3 TW calculation

(1) Drawings and details in the "Thermowells information " sheet.

i
070 - *ø 0.28* (7)
080 - *ø 0.31* (8)
090 - *ø 0.35* (9)
100 - *ø 0.39* (10)
120 - *ø 0.47* (12)

"HOW TO ORDER" SEQUENCE

Section	Model	Material	Instrument connection	Process connection	Insertion hole	Insertion length	Extension length	Options
9	W52	4	41F - G 1/2	51M	070			P02...CVK
	W53	5	43M - 1/2 NPT	61M	080			
	W54		41M - G 1/2 B	53M	090			
	W62			63M	100			
	W63				120			
	W64							

IN ORDER TO IMPROVE THEIR PRODUCTION, MESSRS. NUOVA FIMA RESERVE THE RIGHT TO THEMSELVES TO MAKE ALL THE MODIFICATIONS THAT THEY DEEM INDISPENSABLE AT ANY TIME. UPDATED DATA-SHEET ARE AVAILABLE ON SITE: www.nuovafima.com

NUOVA FIMA S.p.A. - www.nuovafima.com
P.O. BOX 58 - VIA C. BATTISTI 59 - 28045 INVORIO (NO) ITALY
TEL. +39 0322 253200 - FAX +39 0322 253232

bar-stock thermowells, tapered shank with flanged connection, NP 6...250

W93

Thermowells are used to to protect the measuring instrument from corrosion, high pressure or hgih fluid velocity and to allow the measuring instrument removal for recalibration or replacement without affecting the process system. The W93 serie includes bar-stock thermowells with flanged process connection and they are suitable for heavy work conditions. These thermowells have a conic immersion length.

9.W93 - Standard Model

Nominal pressure: as flange rating, *2900 psi @ 752°F max* (250 bar @ 400°C).
Process fluid temperature: *-328...+1112°F* (-200...+600∞C), for std materials.
Total length: *max 40"* (1000 mm).
Process connection: plain flanges as per DIN-UNI or ASME B16.5; dimensions and finishing as defined in "Thermowell information" sheet.
Materials:
AISI 316 (**Cod. 4**) or AISI 316L (**Cod. 5**) st.st. bar-stock;
ASTM A 105 (**Cod. 3**), AISI 316 (**Cod. 4**) st.st flange.
Special materials : Monel 400, Hastelloy C276, Alloy 825, Alloy 625, Duplex SAF 2205, Duplex SAF 2507 flange and bar-stock (the flange is also available made by stainless steel, with wetted parts made by special material)

OPTIONS

P02 -	Oxygen service
E30 -	NACE MR0103/MR0175 - ISO 15156-3 certificate
TC1 -	Plug and chain (1)
NIP -	Nipple with coupling (1)
	Double welding (1)
FUL -	"full penetration" welding (1)
P04 -	Dye penetrant test (1)
CVK-	ASME PTC 19.3 TW calculation (1)

(1) Drawings and details in the "Thermowells information " sheet.

RB4 - 04/13

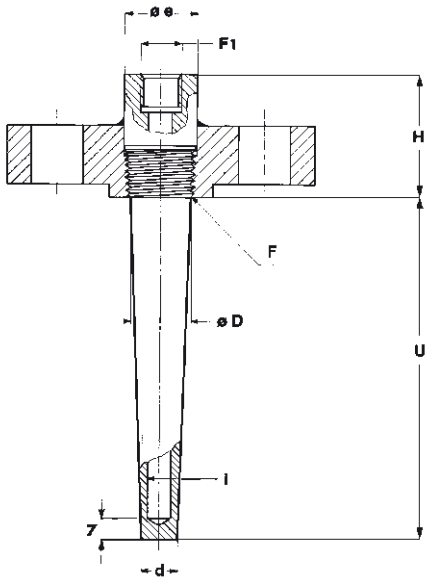

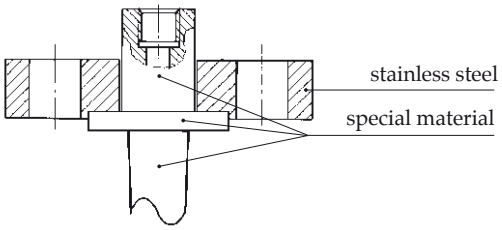

Version with stainless steel flange, but wetted parts made by special material

F1
41F - G 1/2
43F - 1/2-14 NPT
53F - 3/4-14 NPT

i
070 - ø *0.28* (7)
080 - ø *0.31* (8)
090 - ø *0.35* (9)
100 - ø *0.39* (10)
120 - ø *0.47* (12)

dimensions : *inches* (mm)

Standard (1)	DN		F	e	H	i	D	d
ASME B16.5	1″	Class 150...1500	3/4″ NPT	*1.18* (30)	*2.36* (60)	*0.28-0.31-0.35* (7 - 8 -9)	*0.91* (23)	*0.71* (18)
						0.39-0.47 (10 - 12)	*0.91* (23)	*0.83* (21)
	1″ 1/2 2″		1″ NPT	*1.38* (35)	*2.36* (60)	*0.28-0.31-0.35* (7 - 8 -9)	*1.14* (29)	*0.71* (18)
						0.39-0.47 (10 - 12)	*1.14* (29)	*0.83* (21)
DIN-UNI	25	NP 6...100	3/4″ NPT	*1.18* (30)	*2.36* (60)	*0.28-0.31-0.35* (7 - 8 -9)	*0.91* (23)	*0.71* (18)
						0.39-0.47 (10 - 12)	*0.91* (23)	*0.83* (21)
	32, 40, 50		1″ NPT	*1.38* (35)	*2.36* (60)	*0.28-0.31-0.35* (7 - 8 -9)	*1.14* (29)	*0.71* (18)
						0.39-0.47 (10 - 12)	*1.14* (29)	*0.83* (21)

(1) flange dimensions are shown on introductory data-sheet “Introduction to thermowells”

”HOW TO ORDER” SEQUENCE

Section	Model	Material	Flange material	Instrument connection	Process connection	Insertion hole	Insertion length	Extension length	Options
9	**W93**	**4**	**3**	**41F**	**6AA**	**070**			**P02...CVK**
		5	**4**	**43F**		**080**			
				53F		**090**			
						100			
						120			

IN ORDER TO IMPROVE THEIR PRODUCTION, MESSRS. NUOVA FIMA RESERVE THE RIGHT TO THEMSELVES TO MAKE ALL THE MODIFICATIONS THAT THEY DEEM INDISPENSABLE AT ANY TIME. UPDATED DATA-SHEET ARE AVAILABLE ON SITE: **www.nuovafima.com**

NUOVA FIMA S.p.A. - www.nuovafima.com
P.O. BOX 58 - VIA C. BATTISTI 59 - 28045 INVORIO (NO) ITALY
TEL. +39 0322 253200 - FAX +39 0322 253232

NUOVA FIMA S.p.A.
P.O. BOX 58 Via Cesare Battisti, 59
28045 Invorio (NO) Italy
Tel. +39 0322.253200
Fax +39 0322.253232
info@nuovafima.com

www.nuovafima.com

Italy - General Headquarters:
NUOVA FIMA S.p.A.
P.O. BOX 58 Via Cesare Battisti, 59 - 28045 Invorio (NO) Italy
Tel. +39 0322.253200 - Fax +39 0322.253232
www.nuovafima.com - info@nuovafima.com

Spain:
NUOVA FIMA S.A.
Can Salvà s/n - 17404 Riells i Viabrea - (Girona) Spain
Tel. +34 972.870700 - Fax +34 972.871100
infosp@nuovafima.com

Argentina:
NUOVA FIMA América Latina S.A.
Eduardo Sivori 5106 - B1605AVJ - Munro - Buenos Aires - Argentina
Tel. +54 11 4762-6969 - Fax +54 11 4756-7171
infoal@nuovafima.com.ar

Brazil:
NUOVA FIMA DO BRASIL LTDA.
Rua Major Otaviano, n° 210 - Belenzinho - 03054-050 - São Paulo - Brazil
Tel. +55 11 2916-5234 - Fax +55 11 2916-4655
infobr@nuovafima.com.br

USA:
NUOVA FIMA USA INC.
4123 Hollister, Suite G - Houston, TX 77080 - United States of America
Tel. +1 713.690.9800 - Fax +1 713.690.9803
infousa@nuovafima.com

Russia:
NUOVA FIMA RUSSIA
г. Москва, 115533 - м. Коломенская, - пр. Андропова, 26
тел. +7 (495) 543-88-54
www.nuovafima.ru - Эл. Почта info@nuovafima.ru

Chinese Pattern Approval (China)

Compliance to FDA Standars (USA)

Compliance to CAN/CSA (Canada) and to UL (USA) standards

UDT pattern approval (Poland)

Compliance to directives of Economic European Community

Compliance to 74-03 standard of 3A association (Sanitary Standards Symbol Administrative Council-USA)

Certification for the quality management system in compliance with ISO 9001 : 2008

Compliance to GOST standards (Russia)

Compliance to ATEX 94/9/CE directive (ECC)